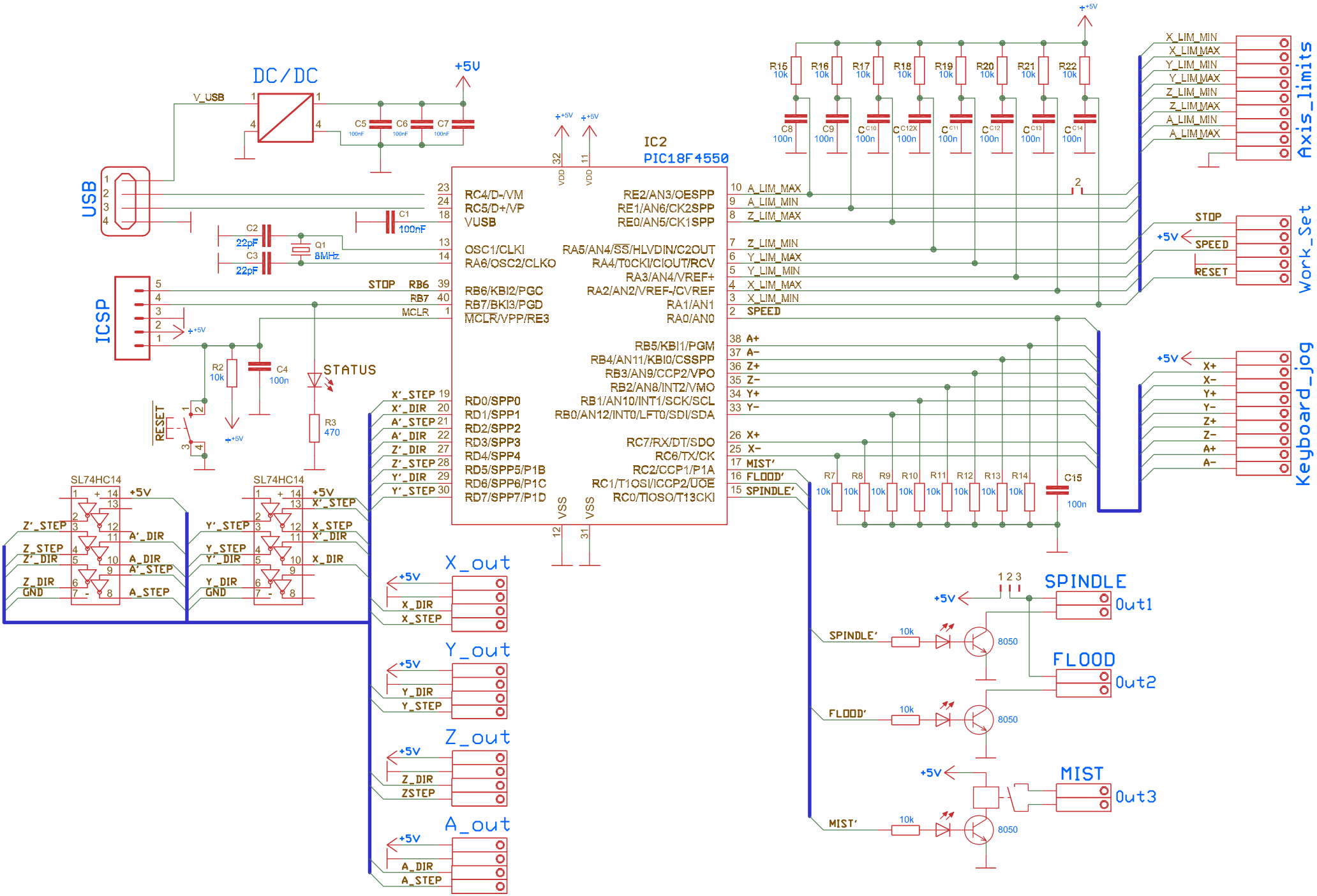CNC USB Controller MK1 clone