AC1/J2

Высокие обороты 6 - Hohe Drehzahl
Низкие обороты 19- Niedrige Drehzahl
10- +5V Spannungsvers.
Разблокировка 13- Freigabe
Экран 3 - Abschiermung
Ошибка шпинделя 11- Spindel-Fehler
По часовой 18- Spindel Uhrzeigers.
Пр. часовой 4 - " Gegenuhrz.

Ориентир. выполн. 22- Sp. Orientiert

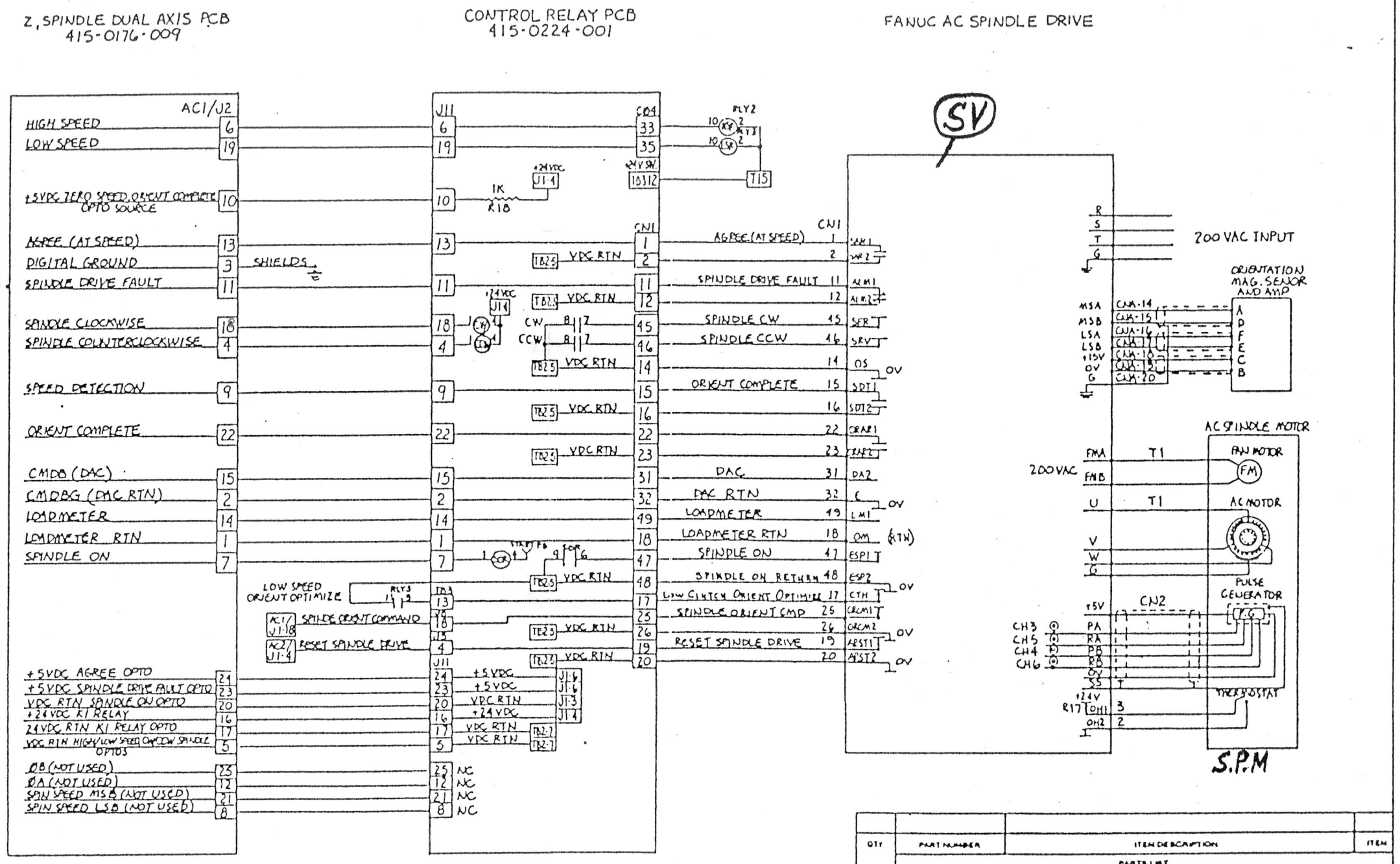

QTY	PART NUMBER	ITEM DESCRIPTION	ITEM
		PARTS LIST	

SURFACE TREATMENT

HEAT TREATMENT

FIRST USED ON: BMC 30/40/50

EXCEPT AS NOTED
ALL DIMENSIONS IN INCHES
TOLERANCES
DECIMAL
0 ± 0.30
00 ± 0.15
000 ± 0.08
0000 ± 0.005
ANGULAR ± 0°30'
BREAK ALL SHARP EDGES
THIRD ANGLE PROJECTION

HURCO MANUFACTURING COMPANY, INC.
INDIANAPOLIS, IN U.S.A.

DESCRIPTION: SPINDLE AXIS CONNECTION DIAGRAM

DRAWN	DATE	CHECKED	DATE	APPROVED	DATE
		TAW	26 NOV 86		26 NOV 86

SCALE — UNIT OF MEAS — SIZE C — DRAWING 002-3210-011 — SHT 1 OF 1 — REV A