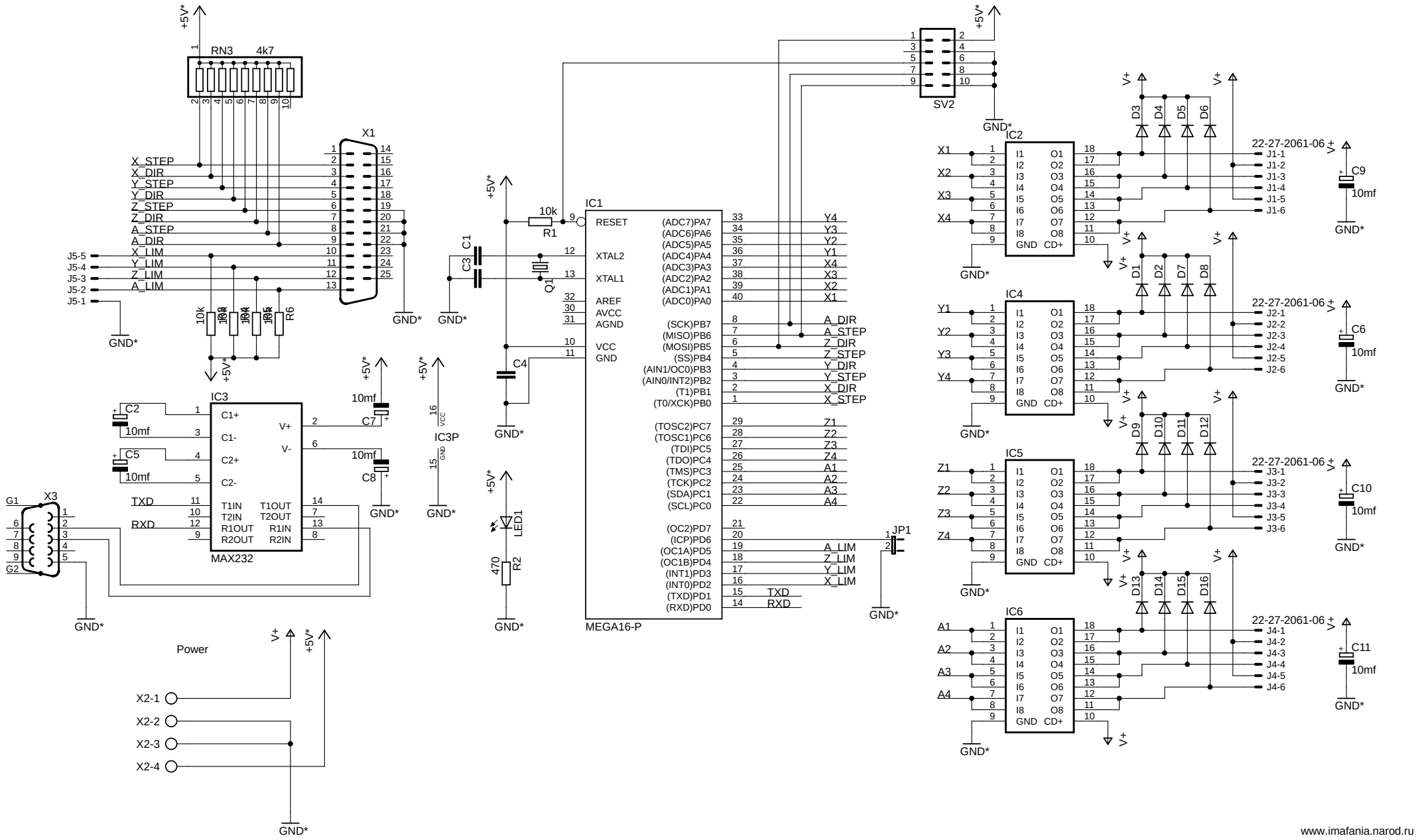
+5V*
RN3 4k7
X1
X_STEP
X_DIR
Y_STEP
Y_DIR
Z_STEP
Z_DIR
A_STEP
A_DIR
X_LIM
Y_LIM
Z_LIM
A_LIM
J5-5
J5-4
J5-3
J5-2
J5-1
GND*
10k
R6
IC3
C1+
C1-
C2+
C2-
V+
V-
T1IN
T2IN
R1OUT
R2OUT
T1OUT
T2OUT
R1IN
R2IN
MAX232
C2
C5
C7
C8
10mf
TXD
RXD
X3
G1
G2
IC3P
VCC
GND
Power
X2-1
X2-2
X2-3
X2-4
V+
IC1
MEGA16-P
RESET
XTAL2
XTAL1
AREF
AVCC
AGND
VCC
GND
(ADC7)PA7
(ADC6)PA6
(ADC5)PA5
(ADC4)PA4
(ADC3)PA3
(ADC2)PA2
(ADC1)PA1
(ADC0)PA0
(SCK)PB7
(MISO)PB6
(MOSI)PB5
(SS)PB4
(AIN1/OC0)PB3
(AIN0/INT2)PB2
(T1)PB1
(T0/XCK)PB0
(TOSC2)PC7
(TOSC1)PC6
(TDI)PC5
(TDO)PC4
(TMS)PC3
(TCK)PC2
(SDA)PC1
(SCL)PC0
(OC2)PD7
(ICP)PD6
(OC1A)PD5
(OC1B)PD4
(INT1)PD3
(INT0)PD2
(TXD)PD1
(RXD)PD0
10k
R1
C1
C3
Q1
C4
LED1
470
R2
JP1
SV2
IC2
IC4
IC5
IC6
I1 I2 I3 I4 I5 I6 I7 I8
O1 O2 O3 O4 O5 O6 O7 O8
GND CD+
22-27-2061-06
J1-1
J1-2
J1-3
J1-4
J1-5
J1-6
J2-1
J2-2
J2-3
J2-4
J2-5
J2-6
J3-1
J3-2
J3-3
J3-4
J3-5
J3-6
J4-1
J4-2
J4-3
J4-4
J4-5
J4-6
C9
C6
C10
C11
D1
D2
D3
D4
D5
D6
D7
D8
D9
D10
D11
D12
D13
D14
D15
D16
www.imafania.narod.ru