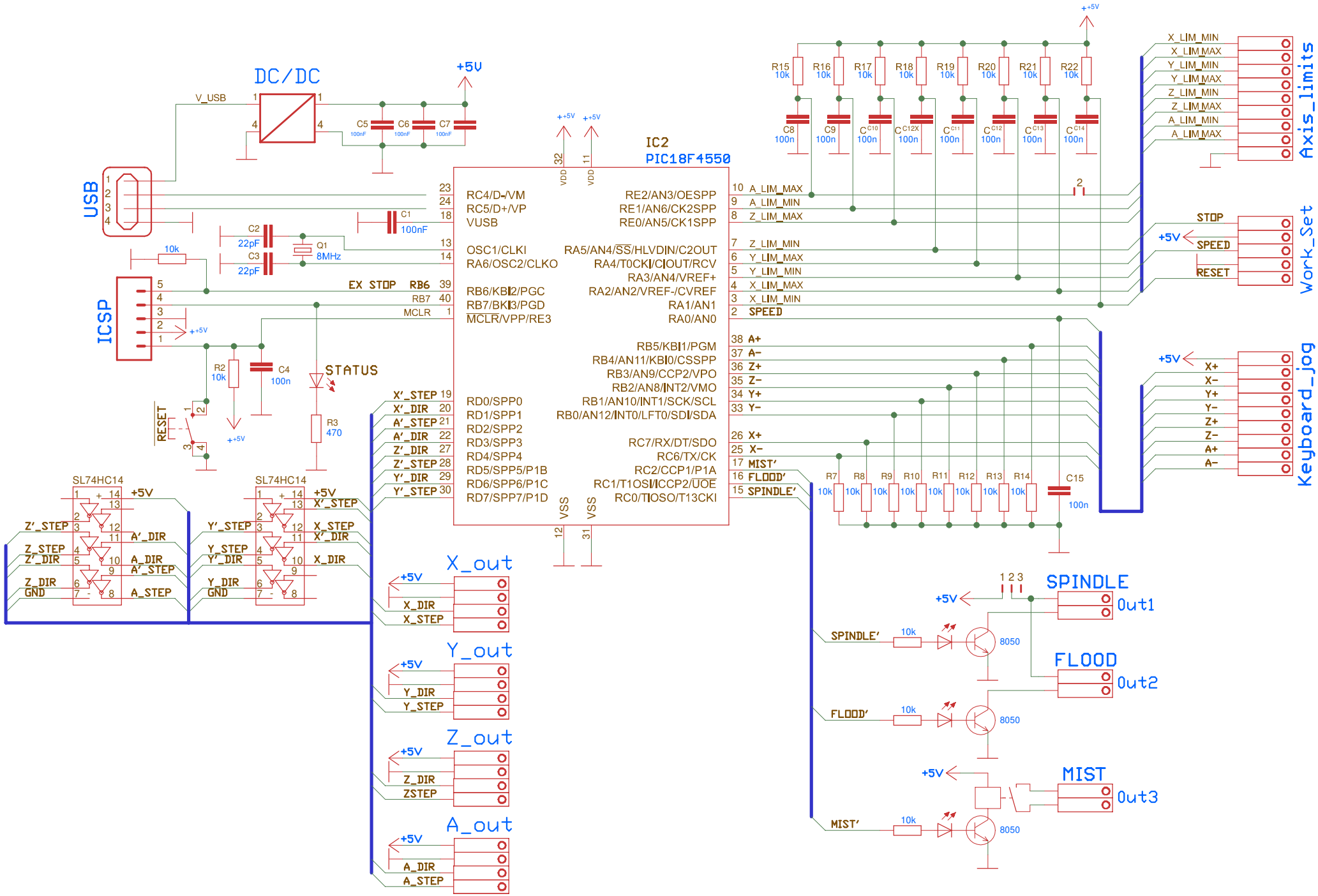CNC USB Controler MK1 clone