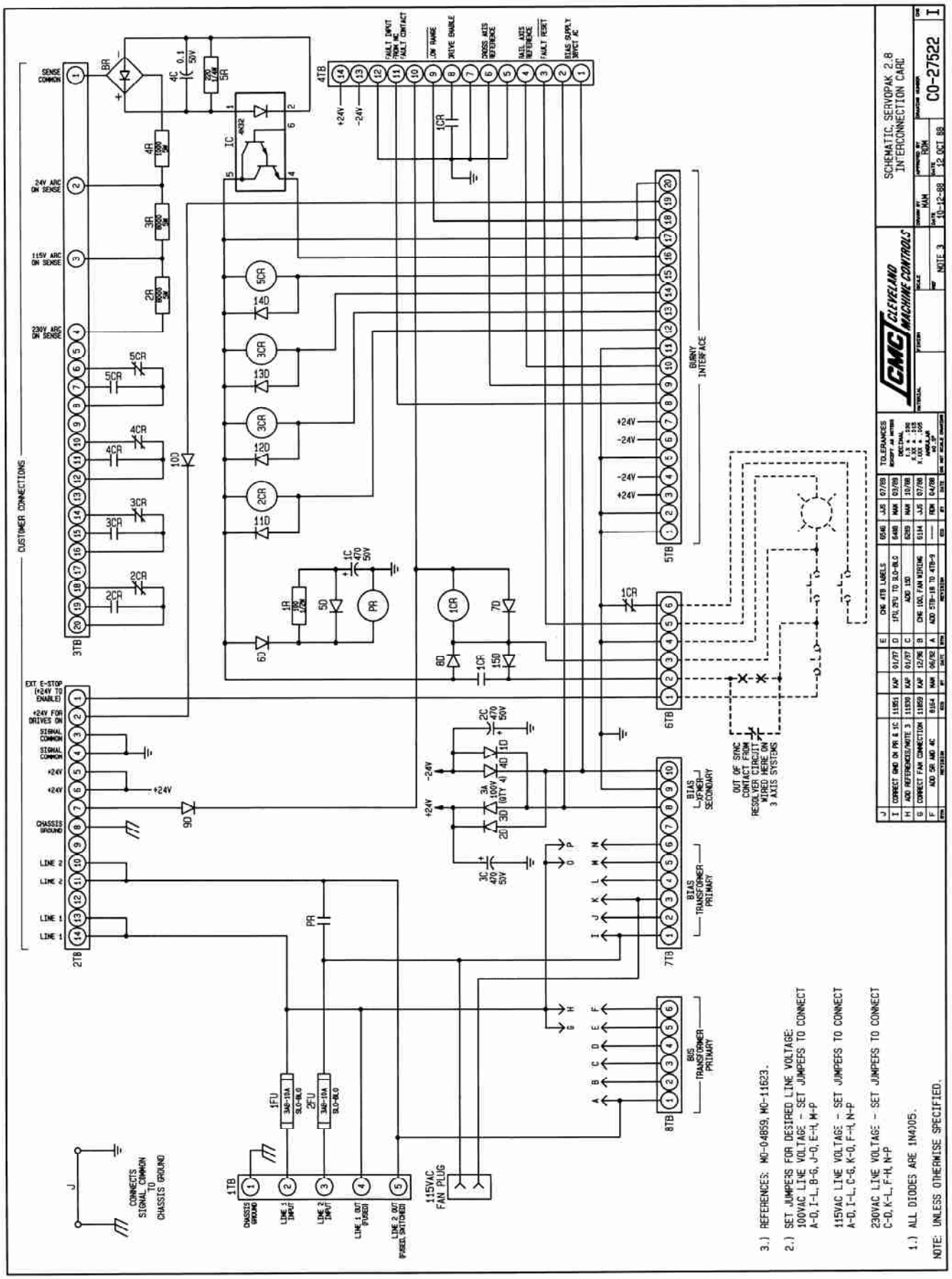
SCHEMATIC, SERVOPAK 2.8
INTERCONNECTION CARD
CO-27522
CLEVELAND MACHINE CONTROLS
CUSTOMER CONNECTIONS
BUSNY INTERFACE
BIAS XFMR SECONDARY
BIAS TRANSFORMER PRIMARY
BIS TRANSFORMER PRIMARY
115VAC FAN PLUG
CONNECTS SIGNAL COMMON TO CHASSIS GROUND
OUT OF SYNC CONTACT FROM RESOLVER CIRCUIT WIRED HERE ON 3 AXIS SYSTEMS
3.) REFERENCES: MO-04859, MO-11623.
2.) SET JUMPERS FOR DESIRED LINE VOLTAGE:
100VAC LINE VOLTAGE - SET JUMPERS TO CONNECT A-D, I-L, B-G, J-O, E-H, M-P
115VAC LINE VOLTAGE - SET JUMPERS TO CONNECT A-D, I-L, C-G, K-O, F-H, N-P
230VAC LINE VOLTAGE - SET JUMPERS TO CONNECT C-D, K-L, F-H, N-P
1.) ALL DIODES ARE 1N4005.
NOTE: UNLESS OTHERWISE SPECIFIED.