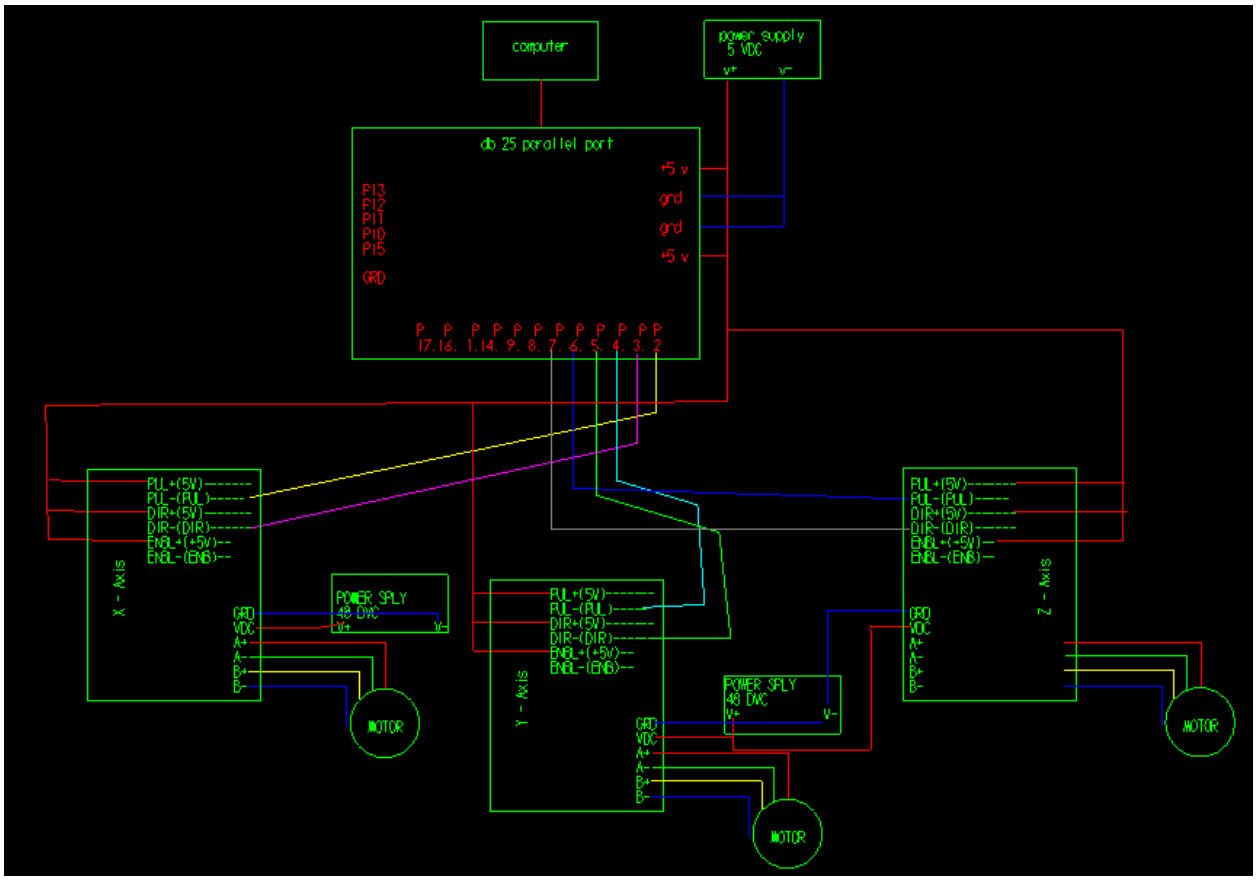My revise wiring diagram kindly please check. Thank you