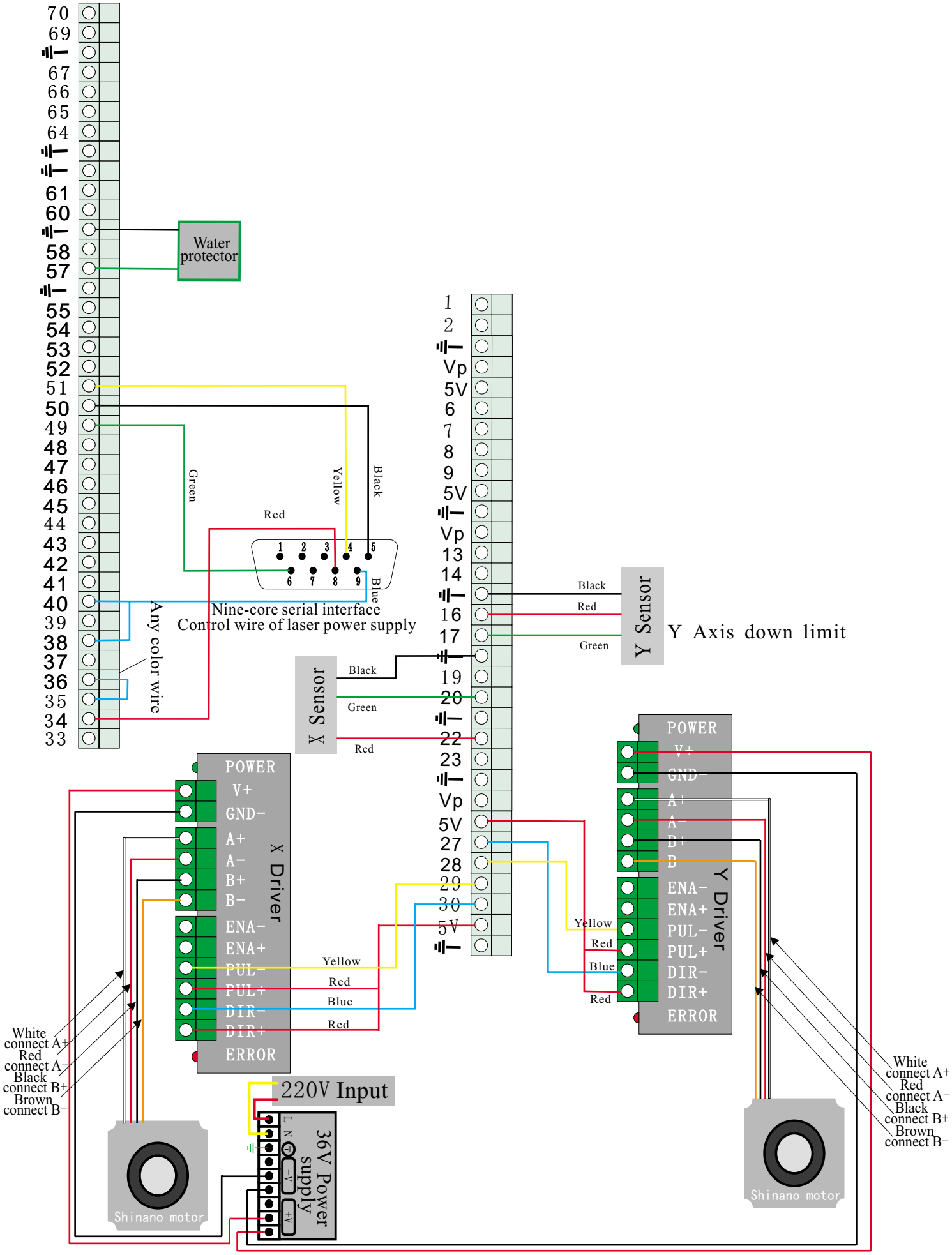

Ver 2.0/Ver2.2 Wire connection diagram for Shinano electromotor