SV-X3E Series Servo Drive
User Manual

Table of Contents

Preface **3**
1. About this user manual 3
2. Confirm the following items before unpacking. 3
3. Safety precautions 3
1. Product introduction and model selection **7**
1.1 Product nameplates and models 7
1.2 Part names of servo motors and drives 8
1.3 Combination of the drive and the motor 9
1.4 Model selection of external regenerative resistor 10
1.5 Selection of cables and connector accessories 10
2. Product specifications **12**
2.1 Servo drive specifications 12
2.2 Motor specifications 16
3. Product installations and dimensions **28**
3.1 Installation environmental conditions 28
3.2 Installations and spacing 28
3.3 Dimensions of servo motors 30
3.4 Dimensions of servo drives 36
4. Servo motor and drive wrings **38**
4.1 System wiring diagram 38
4.2 Drive terminal descriptions 40
4.3 Terminal arrangement and wire color of motor connectors 42
4.4 RS-485 communication wirings 44
4.5 I/O control terminal (CN1) descriptions 45
4.6 Standard wiring diagrams 47
4.7 Timing chart 52
5. Operation panel and operations **54**
5.1 Keys descriptions 54
5.2 Display descriptions 54
5.3 JOG running and parameter identification 56
6. Control functions **58**
6.1 Position control mode 58
6.2 Speed control mode 62
6.3 Torque control mode 64
6.4 Motion control functions 65
7. Parameters **73**
7.1 List of parameters 73
7.2 Parameter descriptions 86
8. Gain tuning **133**

8.1 Gain tuning introductions 133
8.2 Automatic gain tuning (auto-tuning) 134
8.3 Adaptive filtering 136
8.4 Manual gain tuning 138
9. Fault protections and alarms 145
9.1 List of errors and alarms 145
9.2 Troubleshooting 146
10. Communication 153
10.1 Communication rules 153
10.2 Communication read/write commands 153
10.3 Communication DI functions 155
10.4 Communication DO functions 156
10.5 Reading encoder absolute positions 156

Preface

Thank you for purchasing HCFA products. This user manual provides instructions for advanced use of the SV-X3E series servo drive and motor. Wrong operations may cause hazardous conditions and shorten the service life. Please read through the manual thoroughly before using.

1. About this user manual

①We make every effort to perfect this user manual, however if you have found some mistakes or uncertain points, please contact HCFA at any time.

②Please note the following items on the user manual

●Danger exists as it's the high-voltage device.

●There will be some residual voltage on the terminals or inside the devices even after power OFF and it is dangerous.

●High temperature locally

●Disassembling is prohibited.

③Product specifications and functions may change without notice.

④Consult our sales representative if the equipment using HCFA needs to obtain safety certificates.

⑤To extend the service life of motor and drive, it is necessary to use it under the correct conditions. Please follow this user manual for details.

⑥The latest information should be recorded in the user manual and manual will be updated regularly. If you need the latest version, please contact HCFA distributors.

⑦Without the approval of company, it is forbidden to reprint part or all of this user manual.

2. Confirm the following items before unpacking.

●Check if the products are the ones you ordered.

●Check if there are some damage to the products during transportation.

●Any questions, please contact the HCFA distributor.

3. Safety precautions

This section will introduce the main instructions that users shall follow during the receiving, storage, handling, installation, wiring, operation, inspection and disposal of the products.

DANGER Indicates that incorrect handling may result in death or severe injury.

CAUTION Indicates that incorrect handling may result in medium or slight personal injury or physical damage.

Indicates "Prohibitions" (Indicates what must not be done.)

Indicates "Forced". (Indicates what must be done.)

DANGER		
Installing and wiring		
	Do not connect the servo motor to the commercial power.	To prevent fire or malfunction.
	Do not place combustibles around the servo motor and drive.	To prevent fire.

!	Be sure to leave specified clearances between the case or other equipment and the drive.	To prevent electric shock, fire or malfunction.
	Install it at the place free from excessive dust and dirt, water or oil mist	To prevent electric shock, fire , malfunction or damage
	Install the equipment to incombustibles, such as metal.	To prevent fire.
	Any person who is involved in wiring and inspection should be fully competent to do the work.	To prevent electric shock.
	FG terminal of motor and drive must be grounded.	To prevent electric shock.
	Perform wiring correctly after switching off the breaker.	To prevent electric shock, injury, malfunction or damage
	Insulate electrical parts when connecting cables.	To prevent electric shock, fire or malfunction.
Operation and running		
⃠	During operation, never touch the internal parts of the drive.	To prevent burns or electric shock.
	The cables should not be damaged, stressed loaded, or pinched.	To prevent electric shock, malfunction or damage.
	During operation, never touch the rotating parts of the servo motor.	To prevent injury.
	Do not install the equipment under the conditions with water, corrosive or flammable gas.	To prevent fire.
	Do not use it at the location with great vibration or shock.	To prevent electric shock, injury or fire.
	Do not use the servo motor with its cable soaked in oil or water.	To prevent electric shock, malfunction or damage
	Operate the switches and conduct wiring with dry hand.	To prevent electric shock, injury or fire.
	Do not touch the keyway directly when using the motor with shaft-end keyway	To prevent injury.
	Do not touch the motor and drive heat sink, as they can be very hot.	To prevent burns or parts damaged.
	Do not drive the motor by external force.	To prevent fire.
Other safety instructions		
!	Confirm the equipment's safety after the earthquake happens.	To prevent electric shock, injury or fire.
	Install and set correctly to prevent the fire and personal injury when earthquake happens.	To prevent injury, electric shock, fire, malfunction or damage.
	Set up an external emergency stop circuit to ensure that operation can be stopped and power switched off immediately.	To prevent injury, electric shock, fire, malfunction or damage.
	Before wiring or inspection, turn off the power and wait for 5 minutes or more.	To prevent electric shock.

⚠CAUTION		
Installing and wiring		
!	Please follow the specified combination of the motor and drive.	To prevent fire or malfunction.

	Do not touch the terminals of connector directly.	To prevent electric shock or malfunction.
	Do not block intake and prevent the foreign matters from entering into the motor and drive.	To prevent electric shock or fire.
	Fix the motor and JOG without load. After JOGGING, the motor can be securely mounted to mechanical system.	To prevent injury.
	The servo motor must be installed in the specified direction.	To prevent injury or malfunction.
	Install the equipment correctly in accordance with its weight and rated output.	To prevent injury or malfunction.
Operation and running		
⃠	Do not stand on servo equipment. Do not put heavy objects on equipment.	To prevent electric shock, injury, fault or damage.
	The parameter settings must not be changed excessively. Operation will be instable.	To prevent injury.
	Keep away from direct sunlight.	To prevent malfunction.
	Do not put strong impact on the motor, drive or motor shaft.	To prevent malfunction.
	The electromagnetic brake on the servo motor is designed to hold the servo motor shaft and should not be used for ordinary braking.	To prevent injury or malfunction.
❗	Do not install or operate a faulty servo motor or drive.	To prevent injury, electric shock or fire
	Check the power supply specification.	To prevent fault.
	The electromagnetic brake may is not a braking device. To ensure safety, install a stopping device on the machine side.	To prevent injury.
	When there is an alarm, check the causes and clear the alarm; then restart.	To prevent injury.
	Connect the relay for emergency stop and for brake in series.	To prevent injury or malfunction.
Transportation and storage		
⃠	Do not store the equipment in places with rain, water drop, poisonous gases or liquids.	To prevent malfunction.
	Do not carry the servo motor by the cables, shaft or encoder during transportation.	To prevent injury or malfunction.
	Do not drop or dump the motor during transportation and installation.	To prevent injury or malfunction.
❗	Store the unit in a place in accordance with the user manual.	To prevent malfunction.
Other safety instructions		
❗	Please dispose the battery according to your local laws and regulations.	
	When disposing of the product, handle it as industrial waste.	
Maintenance and inspection		
⃠	Do not disassemble and/or repair the equipment by yourself.	To prevent malfunction.
	Do not turn on or switch off the main power frequently.	To prevent malfunction.
❗	Do not touch the servo drive heat sink, regenerative resistor, servo motor etc. Their temperatures may be high while power is on or for some time after power-off.	To prevent burns or electric shock.
	When the drive become faulty, switch off the control circuit and main	To prevent fire.

	power.	
	If the servo motor is to be stored for a long time, switch off the power.	To prevent malfunction and injury.

Maintenance and inspection

<Warranty period>

The term of warranty for the product is 18 months from the date of manufacture. For motors with brake, they are warranted when acceleration/deceleration times is not beyond the specified service life.

<Warranty coverage>

●This warranty applies only when the condition, method, environment, etc. Of use are in compliance with those stated in this user manual. Even during warranty period, the repair cost will be charged on customer in the following cases:

1) Failure caused by improper storing or handling, repair and modification.

2) Failure caused by the parts which have dropped down or damaged during transportation

3) Failure caused when the products have been used beyond the product specification

4) Failure caused by external factors such as inevitable accidents, including but not limited to fire, earthquake, lightning stroke, windstorm disaster, flood, salt damage, abnormal fluctuation of voltage and other natural disaster.

5) Failure caused by the intrusion of water, oil, metal and other foreign matters.

●The warranty coverage is only for the product itself. We assume no responsibilities for any losses of opportunity and/or profit incurred by failure of the product.

1. Product introduction and model selection

1.1 Product nameplates and models

Contents of name plate

Figure 1.1.1 Nameplate description

Servo motor nameplate

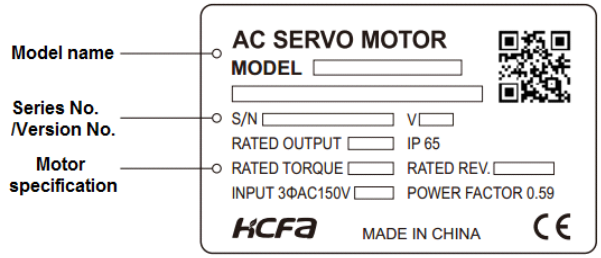

Servo driver nameplate

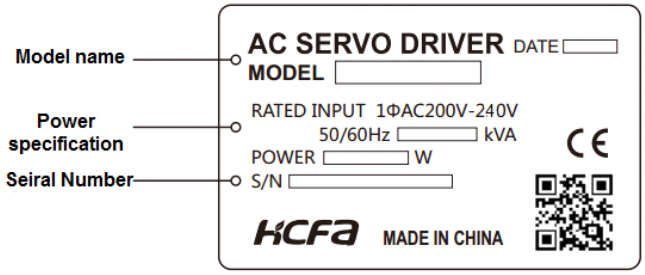

Model designation

Figure 1.1.2 Servo motor models

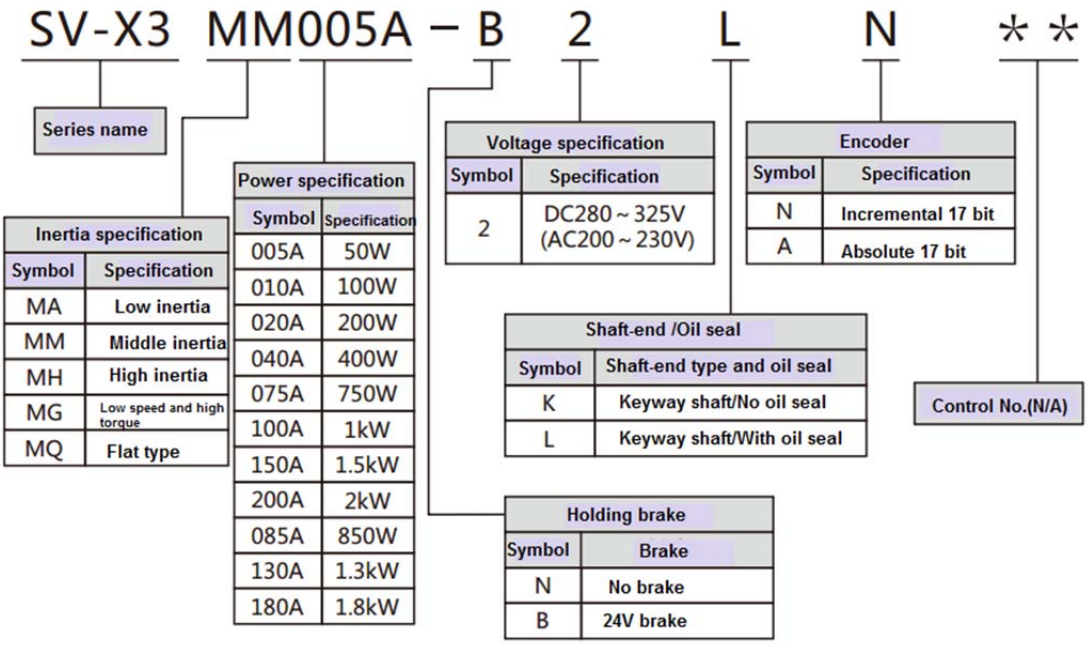

Figure 1.1.3 Servo drive models

SV-X3 E A 075A – A

Series name

Voltage specification	
Symbol	Voltage
A	DC280～325V (AC200～230V)

Rated power	
Symbol	Power
005A	50W
010A	100W
020A	200W
040A	400W
075A	750W
100A	1kW
150A	1.5kW
200A	2kW

Control power supply	
D	External 24VDC power
E	Internal power supply
A	External AC power

1.2 Part names of servo motors and drives

Figure 1.1.4 Part names of servo motor

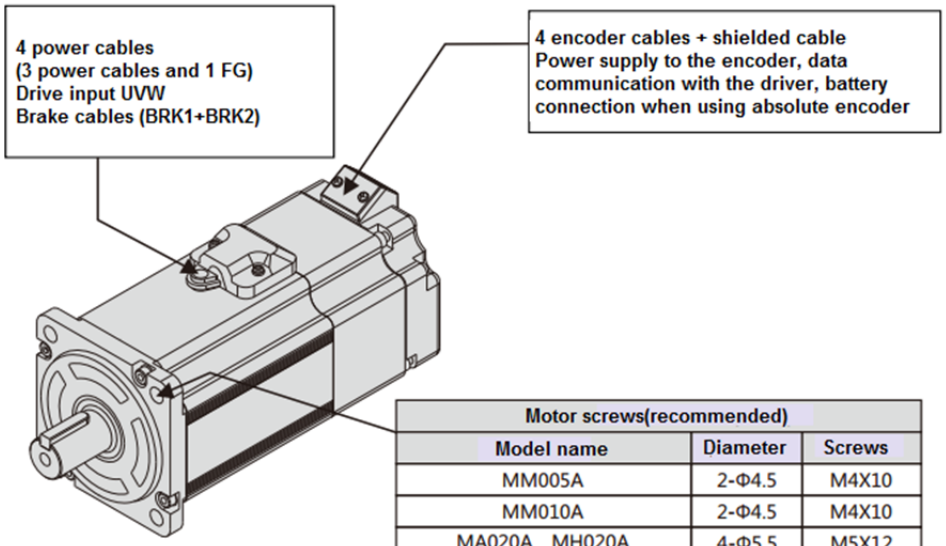

Motor screws(recommended)		
Model name	Diameter	Screws
MM005A	2-Φ4.5	M4X10
MM010A	2-Φ4.5	M4X10
MA020A、MH020A	4-Φ5.5	M5X12
MA040A、MH040A	4-Φ5.5	M5X12
MA075A、MH075A	4-Φ6.6	M6X14
MA100A、MM100A、MH100A	4-Φ9	M8X18
MA150A、MM150A、MH150A	4-Φ9	M8X18
MA200A、MM200A	4-Φ9	M8X18

Figure 1.1.5 Part names of servo drive

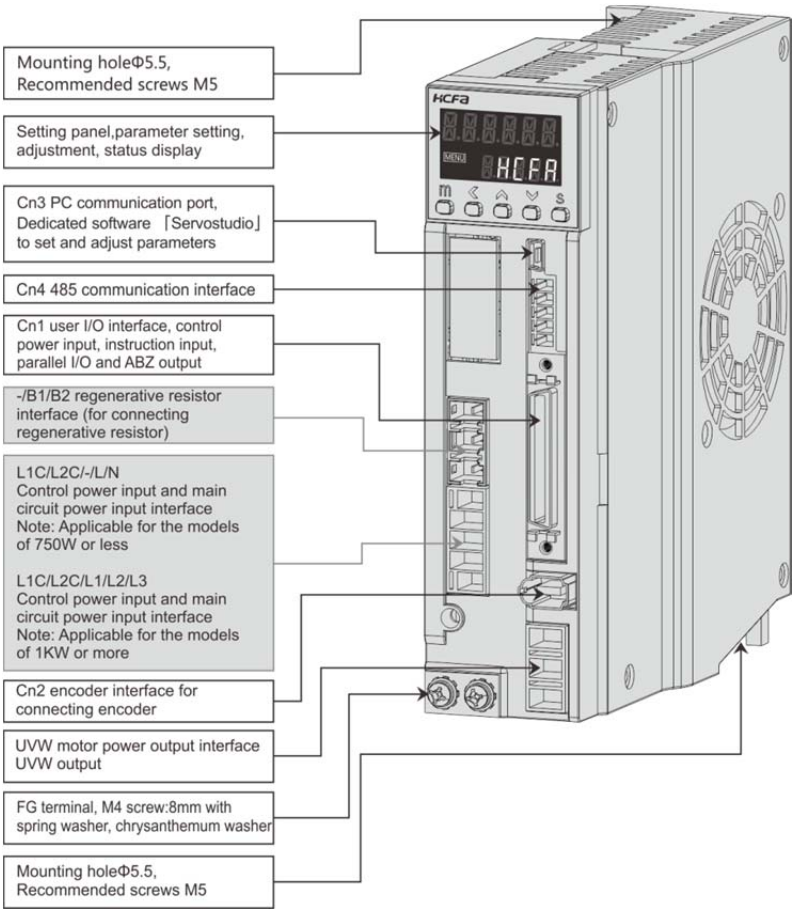

1.3 Combination of the drive and the motor

Table 1. 3. 1 Combination of the drive and the motor

Capacity	Motor model SV-X3 □□□□□-*2**		Motor flange(mm)	Drive model	Drive size
50W	Medium inertia	MM005A	40	SV-X3EA005A-A2	Frame A
100W	Medium inertia	MM010A		SV-X3EA010A-A2	
200W	Low inertia	MA020A	60	SV-X3EA020A-A2	
	High inertia	MH020A			
400W	Low inertia	MA040A		SV-X3EA040A-A2	
	High inertia	MH040A			
750W	Low inertia	MA075A	80	SV-X3EA075A-A2	
	High inertia	MH075A			
1kW	Medium inertia	MM100A	130	SV-X3EA100A-A2	Frame B
	High inertia	MH100A			
	Low inertia	MA100A			
850W	Low speed and high torque	MG085A		SV-X3EA150A-A2	

1.3kW	Low speed and high torque	MG130A			
1.5kW	Low inertia	MA150A			
	Medium inertia	MM150A			
	High inertia	MH150A			
2kW	Low inertia	MA200A		SV-X3EA200A-A2	
	Medium inertia	MM200A			
1.8kW	Low speed and high torque	MG180A		SV-X3EA250A-A2	

1.4 Model selection of external regenerative resistor

Table 1. 4. 1 Model selection of external regenerative resistor

Rated output	50W	100W	200W	400W	750W	1kW	1.5 kW	2 kW
Resistance	40~50Ω	40~50Ω	40~50Ω	40~50Ω	40~50Ω	40Ω	40Ω	30Ω
Capacity	40W	40W	40W	40W	40W	50W	60W	80W

For details please refer to parameter P00.21 (regenerative resistor setting), P00.22 (external regenerative resistor capacity), P00.23 (External regenerative resistor resistance value) and P00.24 (external regenerative resistor heating time constant). The use of regenerative resistor cannot necessarily guarantee the performance. If heating is too high, please increase the resistance or the capacity.

1.5 Selection of cables and connector accessories

- **For 750W or below**

Table 1.5.1

Items	**Usage**	**Model names**	**Remarks**
1	Motor power connector	PWR-CON 750W	
2	Power cable for drive and motor	-CAB-PWR75A-0.5M	Length: 0.5m
		Power cable -CAB-PWR75A-1.5M	Length: 1.5m
		Power cable -CAB-PWR75A-3M	Length: 3m
		Power cable -CAB-PWR75A-5M	Length: 5m
		Power cable -CAB-PWR75A-10M	Length: 10m
3	Encoder cable connector	ENC-TE 750W	
4	Encoder cable	-SVCAB-ENC75A-0.5M	Length: 0.5m
		-SVCAB-ENC75A-1.5M	Length: 1.5m
		-SVCAB-ENC75A-3M	Length: 3m
		-SVCAB-ENC75A-5M	Length: 5m
		-SVCAB-ENC75A-10M	Length: 10m
5	Encoder cable for absolute encoder	-SVBOX-ENCABS+ -SVCAB-ENC75A-*M	

- **For 1KW or above**

Table 1.5.2

Items	Usage	Model names	Remarks
1	Motor power cable connector	PWR-CON 1KW	
2	Power cable for drive and motor	-CAB-PWR100A-0.5M	Length: 0.5m
		-CAB-PWR100A-1.5M	Length: 1.5m
		-CAB-PWR100A-3M	Length: 3m
		-CAB-PWR100A-5M	Length: 5m
		-CAB-PWR100A-10M	Length: 10m
3	Brake connector	PWB-CON 1KW	
4	Encoder cable connector	ENC-TE 1KW	
5	Encoder cable	-CAB-ENC100A-0.5M	Length: 0.5m
		-CAB-ENC100A-1.5M	Length: 1.5m
		-CAB-ENC100A-3M	Length: 3m
		-CAB-ENC100A-5M	Length: 5m
		-CAB-ENC100A-10M	Length: 10m
6	Encoder cable for absolute encoder	-CAB-ENC100A-ABS-0.5M	Length: 0.5m
		-CAB-ENC100A-ABS-1.5M	Length: 1.5m
		-CAB-ENC100A-ABS-3M	Length: 3m
		-CAB-ENC100A-ABS-5M	Length: 5m
		-CAB-ENC100A-ABS-10M	Length: 10m
7	50-Pin pulse connector	Pulse connector CON-50P	

2. Product specifications

2.1 Servo drive specifications

2.1.1 General specifications

Table 2.1.1 General specifications

Items				Specification								
Model Name SV-X3EA□□□-A				005	010	020	040	075	100	150	200	250
General specification	Applicable motor			50W	100W	200W	400W	750W	1kW	1.5kW	2kW	2.5kW
	Dimension W(mm)			42			49		84			
	H(mm)			160			160		160			
	D(mm)			135			135		135			
	Weight(Kg)			0.7			0.8		1.6			
	Input power	Main	Frame A	Single-phase 200~240V±10% 50/60Hz								
			Frame B	Three-phase 200~240V±10% 50/60Hz								
		Control power		Single-phase 200~240V±10% 50/60Hz								
	Dielectric strength			1 minute at 1500 VAC across the primary and FG								
	Control type			Three-phase PWM inverting sine-wave								
	Encoder feedback			Single-turn absolute 17-bit (multi-turn absolute with battery)								
	Digital signal	Input		9 inputs (24VDC, photo-coupler insulation) Switch by control mode								
		Output		9 outputs (24VDC, photo-coupler insulation, open-collector output) Switch by control mode								
	Analog signal	Input		2 inputs (±10V) Switch by control mode								
	Pulse signal	Input		2 inputs (photo-coupler insulation, RS-422 differential, open-collector)								
		Output		4 outputs (A/B/Z-phase RS-422 differential, Z-phase open collector output)								
	Communication function			USB: Connection with PC (with “Servostudio” software) RS-485: remote communication(1: n)								
	Regeneration function			External regenerative resistor possible								
	Dynamic brake			Not built-in								
	Control mode			7 control modes: Position control, speed control, torque control, position/speed control, position/torque control, speed/torque control, fully closed-loop control (optional part needed)								
Functions	Position control	Digital input signals		Servo ON, alarm reset, deviation counter clear, positive/negative direction over-travel, internal command selection, homing start etc.								
		Digital output signals		Alarm state, servo ready, brake off, homing complete, position reached, servo state, torque limiting, speed limiting zero-speed output, etc.								
		Pulse input	Max input pulse frequency	General input; Up to 500KHz, pulse width larger than 1us High-speed input: Up to 4MHz, pulse width larger than 125ns; Open-collector input: Up to 200KHz, pulse width larger than 2.5us								
			Input pulse type	Differential input; open-collector								
			Input pulse form	Pulse+ direction, A-Phase + B-Phase, CW+CCW								

			Electronic gear	A/B A: 1~1073741824 B: 1~1073741824, Encoder resolution/10000000 < A/B <Encoder resolution/2.5
			Smoothing	Smoothing filter, FIR filter
		Pulse output	Output pulse form	A-Phase, B-Phase: Differential output Z-Phase: Differential output or open collector output
			Division ratio	Arbitrary frequency division
			Output pulse	Encoder pulse or position Pulse instruction(can be set)
	Speed control	Digital input signals		Servo ON, alarm reset, speed instruction negation, zero-speed clamp, internal speed control, external forward/reverse torque limit etc.
		Digital output signals		Alarm state, servo ready, brake off, speed reached, torque limiting, speed limiting, zero-speed output, etc.
		Analog input	Speed input	Input voltage -10V to +10V (Maximum speed at ±10V)
			Torque limit source	1) Internal torque limit by P03.09, P03.10 2) External torque limit by P03.11, P03.12 enabled by P_CL/N_CL signals 3) TLMTP i.e. AI1 or AI2 as external forward/reverse torque limit 4) TLMTP as forward limit; TLMTN as reverse limit
			Torque feedforward	1) Internal torque feedforward 2) TFFD, AI1 or AI2
			Internal speed instruction	0~16 segments speed selection can be realized by DI terminal combination.
	Torque control	Digital input signals		Servo ON, alarm reset, torque instruction negation, zero-speed clamp etc.
		Digital output signals		Alarm state, servo ready, brake off, speed reached, torque limiting etc.
		Analog input	Torque input	DC±10V as to rated torque(adjustable by function codes)
		Speed limit		1) Positive/ negative speed limit P03.27, P03.28 2) SPL i.e. AI input
	Common	Speed monitoring		Provided
		Vibration control		Provided
		Adaptive notch filter		Provided
		Auto-tuning		Provided
		Encoder output division and multiplication		Provided
		Internal position control		Provided
		PC setting		Servostudio software
		Protective functions		Overvoltage, power supply error, overcurrent, overheat, overload, encoder error, over speed, position deviation too large, parameter error

Environmental specifications	Temperature	Ambient temperature for use	0~55℃
		Ambient temperature for storage	-20~65℃
	Humidity	Ambient humidity for use	20~85% RH or less (Without condensation)
		Ambient humidity for storage	20~85% RH or less (Without condensation)
	Atmosphere for use & storage		Indoors (Not subject to direct sunlight); free from corrosive gas, flammable gas, oil mist, or dust
	Altitude		1000m or less above sea level
	Vibration		5.8m/s^2 (0.6G) or less, 10~60Hz (No continuous operation allowed at frequency of resonance)

Note 1) Refer to Table 1. 4. 1 for selection of external regenerative resistors.

Note 2) Input pulse forms are described below:

Table 2.1.2

Parameter P00.07/ P00.27	Logic	Input signal form	Signal name	The minimum necessary time range (t1, t2, t3, t4, t5, t6)	
				Positive direction	Negative direction
0	Positive	Pulse & direction Instruction pulse	Pulse CMD_PLS Direction CMD_DIR	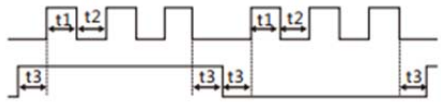	
1	Negative	Pulse & direction Instruction pulse	Pulse CMD_PLS Direction CMD_DIR	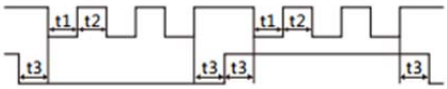	
2	Positive	AB-phase orthogonal Phase pulse	A-Phase CMD_PLS B-Phase CMD-DIR	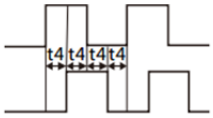	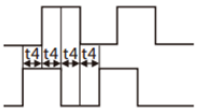
3	Negative	AB-phase orthogonal Phase pulse	A-Phase CMD_PLS B-Phase CMD-DIR	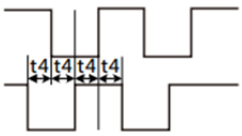	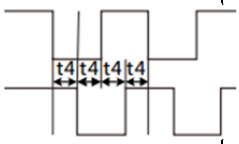
4	Positive	Positive direction pulse Negative direction pulse	CW CMD_PLS CCW CMD_DIR	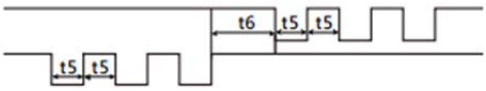	
5	Negative	Positive direction pulse Negative direction pulse	CW CMD_PLS CCW CMD_DIR		

■Max input pulse frequency and minimum input pulse width.

Table 2.1.3

Input pulse signal I/F	Max. pulse frequency	The minimum necessary time [μs]					
		t1	t2	t3	t4	t5	t6
Differential input	2Mpps	0.25	0.25	2.5	0.5	0.25	0.25
Open collector input	200kpps	2.5	2.5	2.5	5.0	2.5	2.5

※The rise and fall time of input pulse signal should be 0.1μs or less.

※The pulse is counted from Low to High.

※Pulse instruction input filter selection (P06.41) should be set according to the input frequency.

※Fix the drive by the mounting holes according to section 3 and leave enough space to prevent high temperature.

※Regarding the ambient temperature of the servo drive, refer to the following figure.

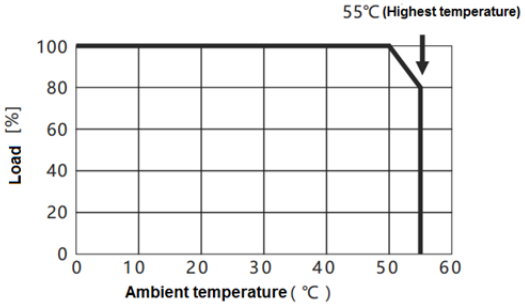

2.1.2 Overload detection characteristics

For SV-X3E series servo drives, when the motor torque exceeds the torque values in the overload detection characteristics, overload protection will start which outputs overload alarm and the motor stops emergently.

Figure 2.1.1 Overload detection characteristics

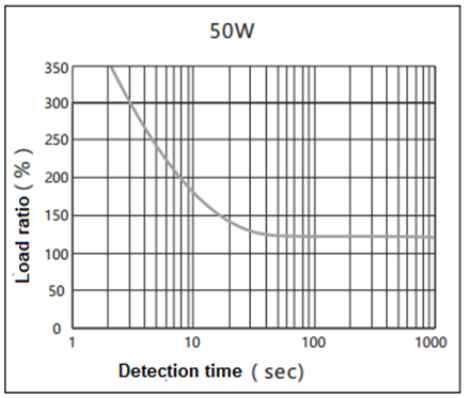

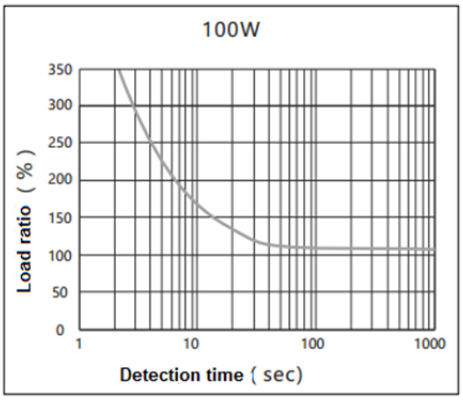

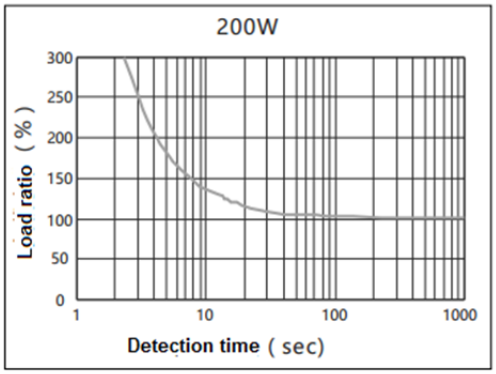

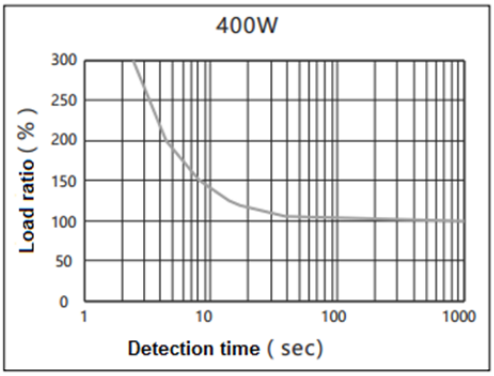

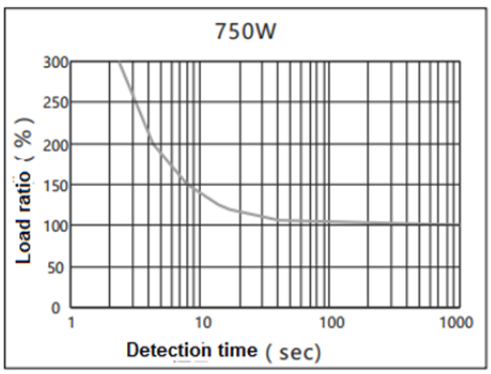

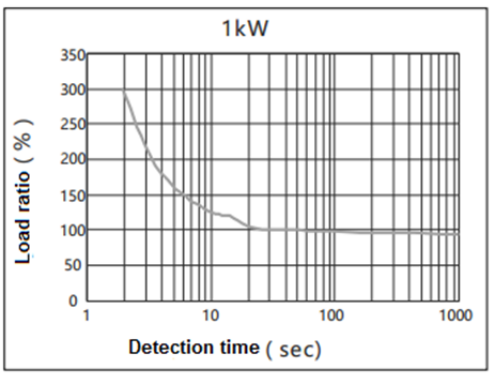

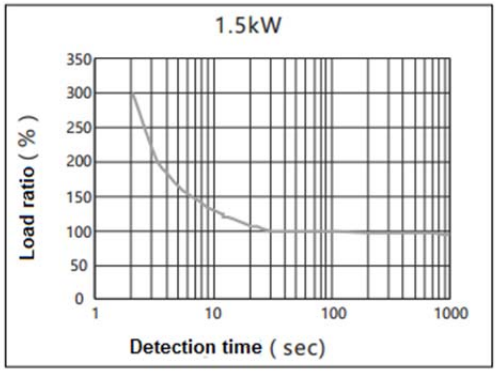

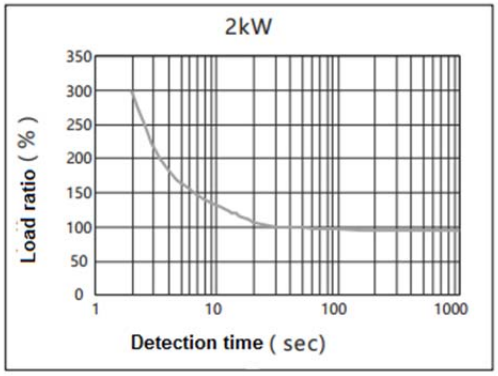

2.2 Motor specifications

2.2.1 General specifications

Table 2.2.1 General specifications

200V~240V AC									
Items			**Unit**	**Specifications**					
Voltage			V	280VDC					
Model name (SV-X3□□□□□-****)			-	MM005A Medium inertia	MM010A Medium inertia	MA020A Low inertia	MH020A High inertia	MA040A Low inertia	MH040A High inertia
Flange installation size			mm	□40	□40	□60			
Mass	Without brake		kg	0.4	0.5	0.9	1.0	1.3	1.5
	With brake			0.6	0.8	1.4	1.5	1.8	2.0
Common specifications	Rated output		W	50	100	200		400	
	Rated torque		N*m	0.16	0.32	0.64		1.27	
	Max. instantaneous torque		N*m	0.56	1.12	1.91		3.82	
	Rated current		Arms	0.6	0.9	1.7		2.7	
	Max. instantaneous current		Arms	2.1	3.2	5.1		8.1	
	Rated speed		r/min	3000		3000			
	Max. speed		r/min	6000		5000			
	Torque constant		N*m/Arms	0.25	0.36	0.417		0.498	
	Phase inductive voltage constant		MV(r/min)	8.8	12.5	14.5		17.4	
	Rated power change rate	No brake	kW/s	5.6	13.6	23.9	9.3	58.7	23.5
		With brake		4.7	12.3	19.5	8.6	51.9	22.4
	Mechanical time constant	No brake	ms	2.60	1.69	1.12	2.87	2.60	1.66
		With brake		3.06	1.87	1.37	3.12	0.75	1.75
	Electrical time constant		ms	0.64	0.76	1.99		2.47	
	Motor rotor Inertia	No brake	$\times 10kg\cdot m^2$	0.045	0.074	0.17	0.43	0.28	0.70
		With brake		0.053	0.082	0.21	0.47	0.31	0.74

	Permissible load	Radial load	N	Refer to 2.2.2 Output shaft permissible load	
		Axial load	N		
	Encoder		17 bit serial communication (EIA422)		
Brake specifications	Usage		Holding(Note: not for braking)		
	Power supply		-	SELV power, reinforced insulation for dangerous voltage.	
	Rated voltage		V	DC24V±10%	
	Rated current		A	0.25	0.3
	Static friction torque		N*m	0.16 or more	0.32 or more / 1.27 or more
	Absorption time		ms	35 or less	50 or less
	Release time		ms	20 or less	15 or less
	Release voltage		V	1VDC or more	
Ambient conditions	Rated time		Continuous		
	Ambient temperature for use		0~40°C(Without condensation)		
	Ambient humidity for use		20~85%RH(Without condensation)		
	Ambient temperature for storage		-20~65°C(Highest temperature guaranteed: 80 degrees, 72hours)		
	Ambient humidity for storage		20~85%RH (Without condensation)		
	Atmosphere for use/storage		Indoors(Not subject to rainwater or direct sunlight); free from corrosive gas, flammable gas, flammables, grinding fluid, oil mist, or dust		
	Insulation class		Class B		
	Insulation resistance		1000 VDC megger 5MΩ or more		
	Dielectric strength		1500 VAC for 1 minute		
	Altitude		1000m or less above sea level		
	Vibration class		V 15(JEC2121)		
	Vibration resistance		49 m/s^2 (5G)		
	Impact resistance		98 m/s^2 (10G)		
	Protective class		IP65		
Points to note			Grounding is mandatory. Class I applicable.		
			Over voltage category II applicable		
			Pollution degree 2 applicable		
			Brake cables have polarity. Red: connected with +24V. Black: connected with GND,		

200V~240V AC									
Items		**Unit**	**Specifications**						
Voltage		V	280VDC						
Model name (SV-X3□□□□□-****)		-	MA075A Low inertia	MH075A High inertia	MM100A Medium inertia	MH100A High inertia	MM150A Medium inertia	MH150A High inertia	MM200A Medium inertia
Flange installation size		mm	□80		□130				
Mass	No brake	kg	2.5	2.7	5.6	7.6	7.0	9.0	8.4
	With brake		3.3	3.5	7.0	9.0	8.4	10.4	9.8

Common specifications	Rated output		W	750		1000		1500		2000
	Rated torque		N*m	2.39		4.77		7.16		9.55
	Max. instantaneous torque		N*m	7.1		14.3		21.5		28.6
	Rated current		Arms	4.3		5.6		9.9		12.2
	Max. instantaneous current		Arms	12.9		16.8		30		36.6
	Rated speed		r/min	3000		2000				
	Max. speed		r/min	4500		3000				
	Torque constant		N．m/Arms	0.61		0.88		0.81		0.85
	Induced voltage constant of each phase		MV(r/min)	21.33		30.9		28.4		29.6
	Rated power change rate	No brake	kW/s	64.1	35.9	50.0	9.2	76.9	13.8	104.9
		With brake		52.8	32.1	36.5	8.6	61.4	13.3	87.9
	Mechanical time constant	No brake	ms	0.53	0.94	0.76	4.17	0.60	3.32	0.58
		With brake		0.64	1.06	1.05	4.43	0.75	3.46	0.69
	Electrical time constant		ms	4.3		10.1		12.2		8.2
	Motor rotor Inertia	No brake	*10kg·m^2	0.89	1.62	4.56	24.9	6.67	37.12	8.70
		With brake		1.08	1.81	6.24	26.4	8.35	38.65	10.38
	Permissible load	Radial load	N	Refer to 2.2.2 Output shaft permissible load						
		Axial load	N							
	Encoder		17 bit serial communication (EIA422)							
Brake specifications	Usage		Holding (Note: not for braking)							
	Power supply		-	SELV power, reinforced insulation for dangerous voltage.						
	Rated voltage		V	DC24V±10%						
	Rated current		A	0.4		1.0				
	Static friction torque		N*m	2.39 or more		9.55 or more				
	Absorption time		ms	70		120				
	Release time		ms	20		30				
	Release voltage		V	1VDC or more						

Ambient conditions	Rated time	Continuous
	Ambient temperature for use	0~40°C(Without condensation)
	Ambient humidity for use	20~85%RH(Without condensation)
	Ambient temperature for storage	-20~65°C(Highest temperature guaranteed: 80 degrees, 72hours)
	Ambient humidity for storage	20~85%RH (Without condensation)
	Atmosphere for use/storage	Indoors(Not subject to rainwater or direct sunlight); free from corrosive gas, flammable gas, flammables, grinding fluid, oil mist, or dust

	Insulation class	Class B
	Insulation resistance	1000 VDC megger 5MΩ or more
	Dielectric strength	1500 VAC for 1 minute
	Altitude	1000m or less above sea level
	Vibration class	V 15(JEC2121)
	Vibration resistance	49 m/s^2 (5G)
	Impact resistance	98 m/s^2 (10G)
	Protective class	IP65
Points to note		Grounding is mandatory. Class I applicable.
		Over voltage category II applicable
		Pollution degree 2 applicable
		Brake cables have polarity. Red: connected with +24V. Black: connected with GND,

200V~240V AC									
Items			**Unit**	**Specifications**					
Voltage			V	280VDC					
Model name (SV-X3□□□□□-****)			-	MA100A Low inertia	MA150A Low inertia	MA200A Low inertia	MG085A Medium inertia	MG130A Medium inertia	MG180A Medium inertia
Flange installation size			mm	ϕ100			ϕ130		
Mass		No brake	kg	3.5	4.4	5.3	5.5	7.1	8.6
		With brake		4.5	5.4	6.3	7.5	9	11
Common specifications	Rated output		W	1000	1500	2000	850	1300	1800
	Rated torque		N*m	3.18	4.77	6.37	5.39	8.28	11.5
	Max. instantaneous torque		N*m	9.55	14.3	19.1	16.2	24.84	34.5
	Rated current		Arms	6.6	8.2	11.3	6.7	9.6	15.6
	Max. instantaneous current		Arms	28	35	48	17	28	42
	Rated speed		r/min	3000			1500		
	Max. speed		r/min	5000			3000		
	Torque constant		N．m/Arms	0.52	0.628	0.607	0.89	0.92	0.774
	Induced voltage constant of each phase		MV(r/min)	18.15	21.92	21.247	31.04	32.08	27
	Motor rotor Inertia	No brake	*10kg·m^2	2.03	2.84	3.68	12.2	18.2	24.4
		With brake		2.35	3.17	4.01	16	22	28.1
	Permissible load	Radial load	N	Refer to 2.2.2 Output shaft permissible load					
		Axial load	N						
	Encoder			17 bit serial communication			20 bit serial communication		
B	Usage			Holding (Note: not for braking)					

	Power supply	-	SELV power, reinforced insulation for dangerous voltage.	
	Rated voltage	V	DC24V±10%	
	Rated current	A	0.8	0.41
	Static friction torque	N*m	8 or more	19.6 or more
	Absorption time	ms	120	120
	Release time	ms	30	30
	Release voltage	V	1.5VDC or more	
Ambient conditions	Rated time	Continuous		
	Ambient temperature for use	0~40°C(Without condensation)	0℃~40℃(Lower the rating at 40℃~60℃)	
	Ambient humidity for use	20~85%RH(Without condensation)	20~80%RH(Without condensation)	
	Ambient temperature for storage	-20~65°C(Without condensation) Highest temperature guaranteed: 80 degrees, 72hours)	-20℃~+60℃(No freezing) *Not energized.	
	Ambient humidity for storage	20~85%RH (Without condensation)	20%~80%RH (Without condensation) *Not energized.	
	Atmosphere for use/storage	Indoors(Not subject to rainwater or direct sunlight); free from corrosive gas, flammable gas, flammables, grinding fluid, oil mist, or dust	Installation site: 1. No corrosive gas or flammable gas 2. Good ventilation. Places with little dust, rubbish or moisture 3. Places easy to check and clear 4. Altitude: 1000m or less(Lower the rating if used at 1000m~2000m) 5. Places with no strong magnetic field	
	Insulation class	Class B	Class F	
	Insulation resistance	1000 VDC megger 5MΩ or more	500 VDC megger 10MΩ or more	
	Dielectric strength	1500 VAC for 1 minute	1500 VAC for 1 minute	
	Altitude	1000m or less above sea level	Lower the rating if used at altitude of 1000m~2000m	
	Vibration class	V 15(JEC2121)	V 15	
	Vibration resistance	49 m/s^2 (5G)	49 m/s^2	
	Impact resistance	98 m/s^2 (10G)	Impact acceleration（at flange）：490m/s^2 Times of impact: Twice	
	Protective class	IP65	IP 67（INC144/529）, DIN40050, JEM1030	

2.2.2 Output shaft permissible load

Figure 2.2.1 Output shaft permissible load

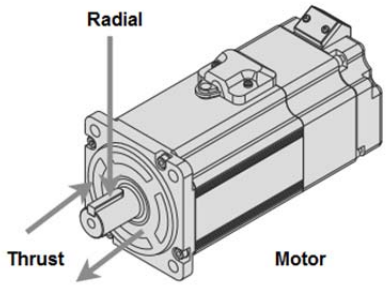

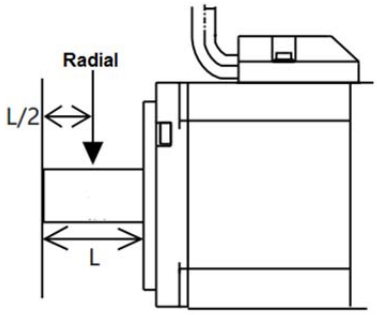

Permissible load	Unit	50W	100W	200W	400W	750W	1kW	1.5kW	2kW
Permissible radial load	N	68	68	245	245	392	490	490	490
Permissible axial load	N	58	58	98	98	147	196	196	196

Permissible load	Unit	850W	1.3KW	1.8KW
Permissible radial load	N	490	686	980
Permissible axial load	N	98	343	392

2.2.3 N-T characteristics

Figure 2.2.2 N-T characteristics

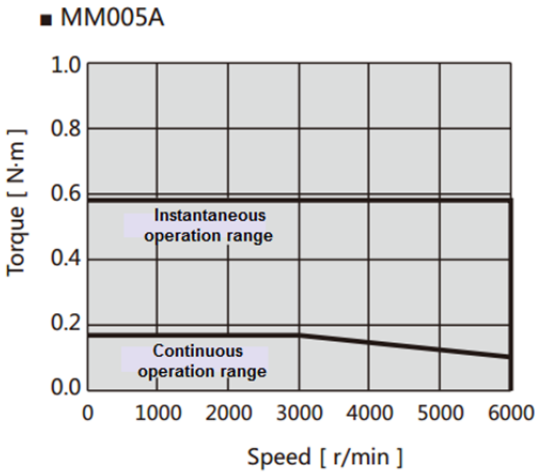

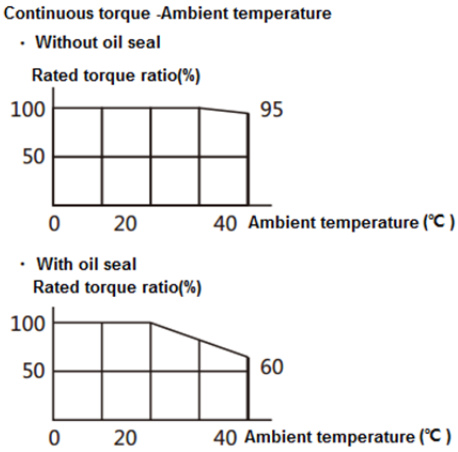

■ MM010A

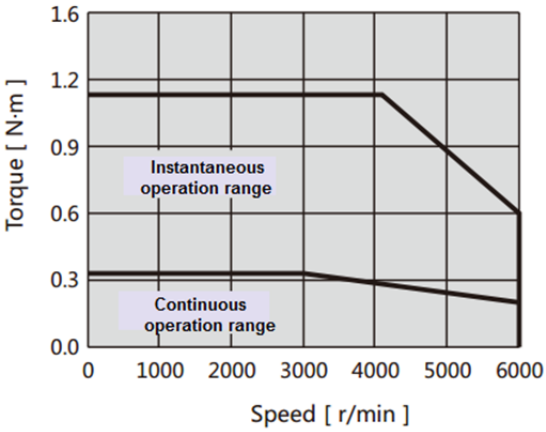

Continuous torque -Ambient temperature

· Without oil seal

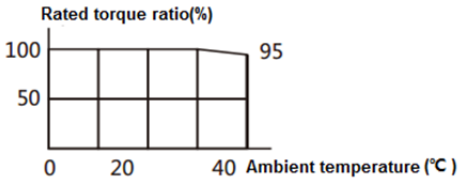

· With oil seal

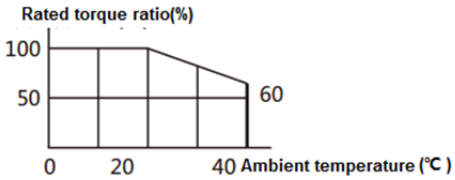

■ MA020A、MH020A

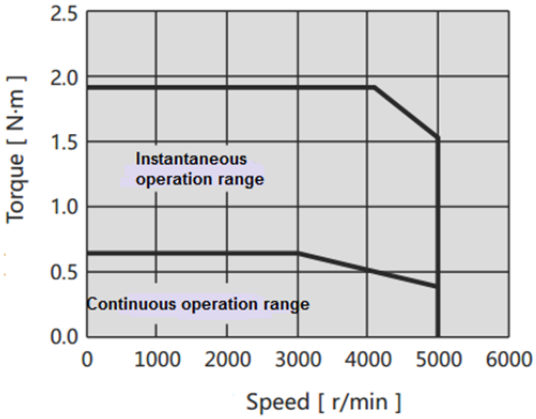

Continuous torque -Ambient temperature

· Without oil seal

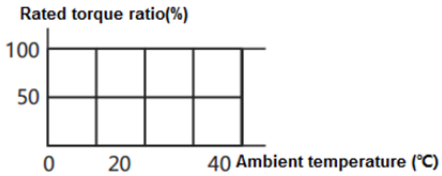

. With oil seal

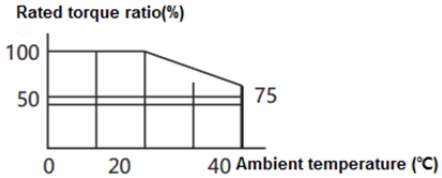

■ MA040A、MH040A

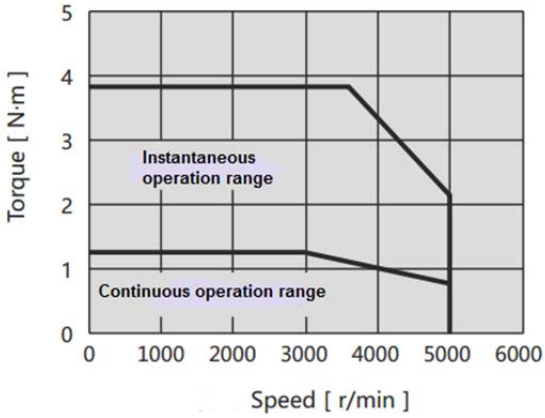

Continuous torque -Ambient temperature

· Without oil seal

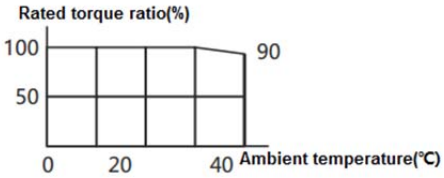

. With oil seal

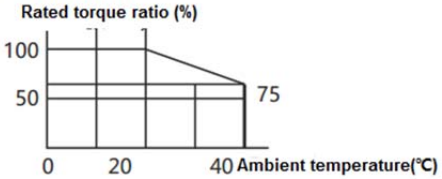

■ MA075A、MH075A

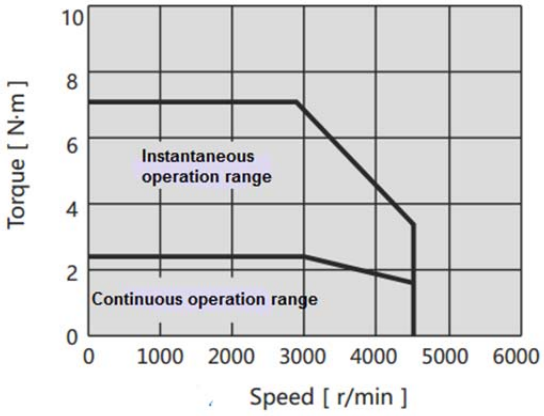

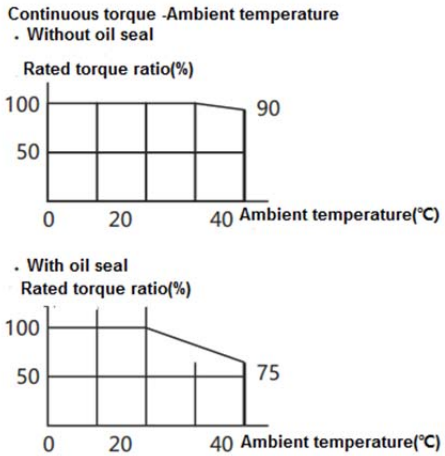

■ MM100A、MH100A

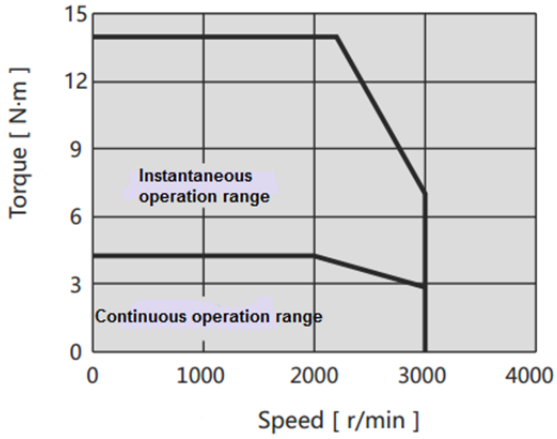

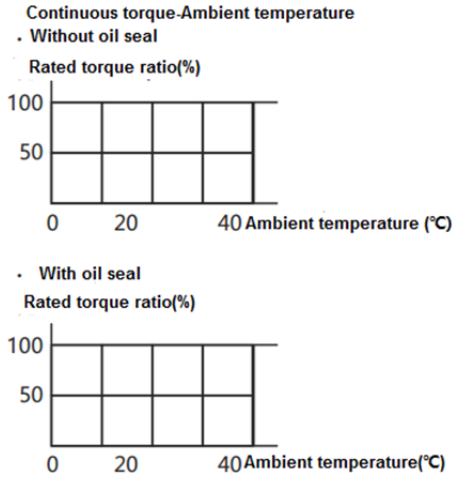

■ MM150A、MH150A

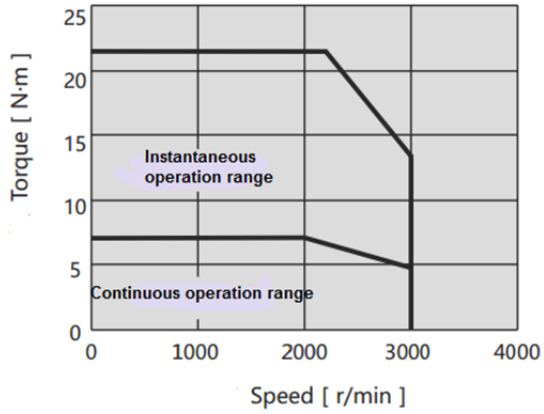

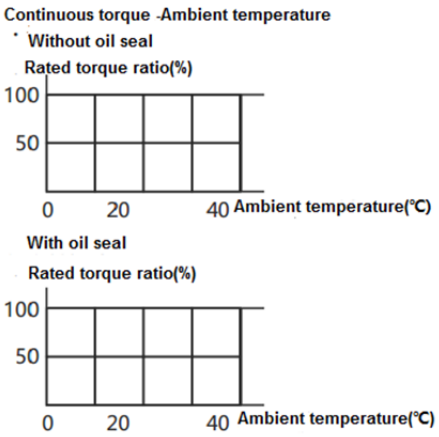

■ MM200A

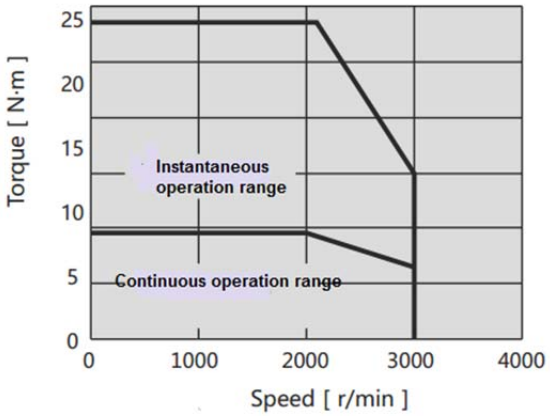

Continuous torque-Ambient temperature

· Without oil seal

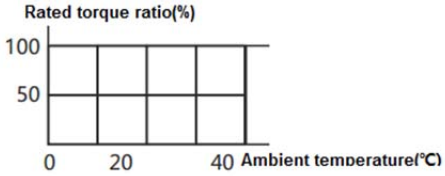

· With oil seal

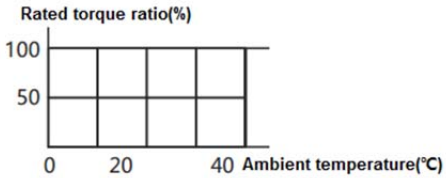

■ MA100A

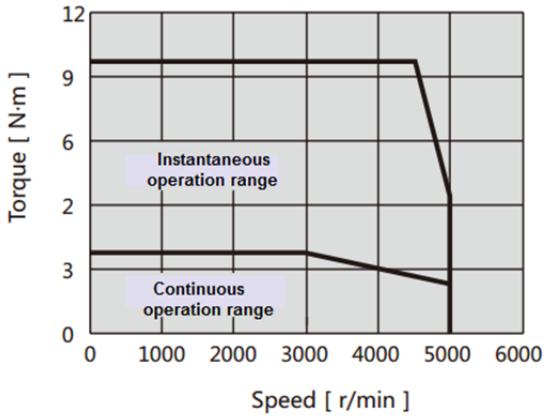

Continuous torque -Ambient temperature

· Without oil seal

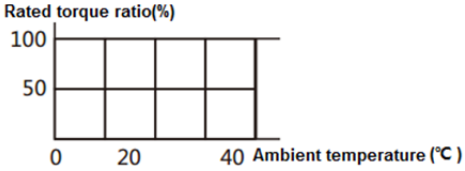

· With oil seal

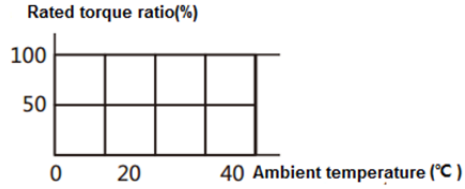

■ MA150A

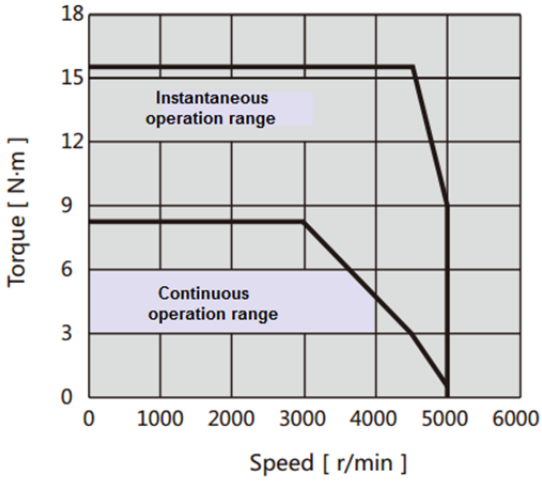

Continuous torque -Ambient temperature

· Without oil seal

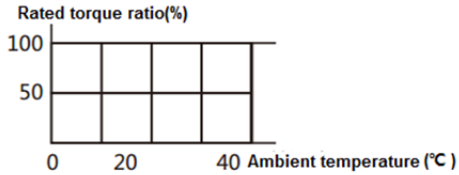

· With oil seal

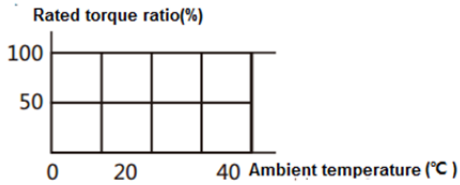

■MA200A

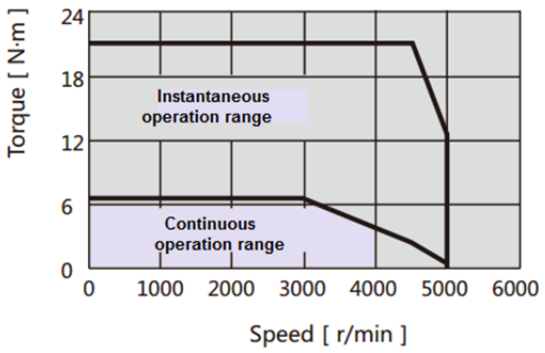

Continuous toruqe-Ambient temperature

· Without oil seal

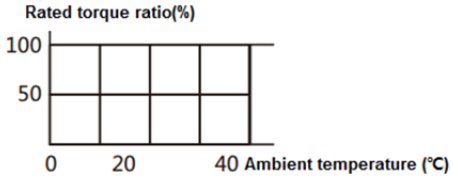

· With oil seal

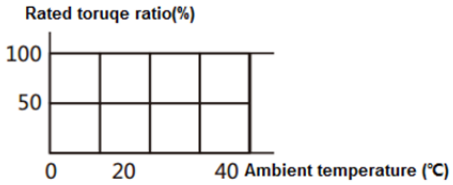

■ MG085A

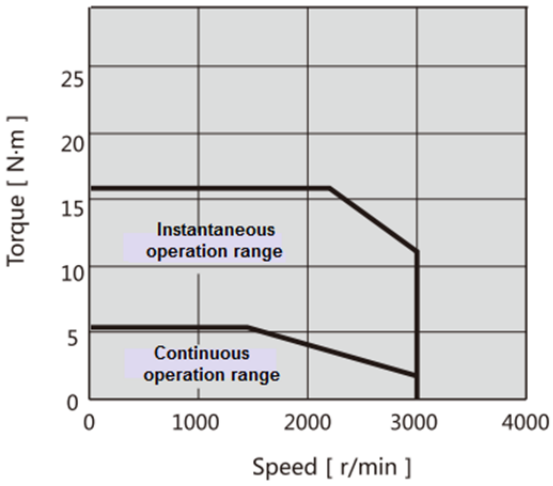

Continuous torque -Ambient temperature

· Without oil seal

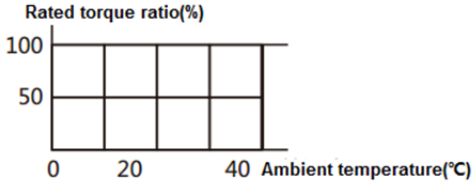

· With oil seal

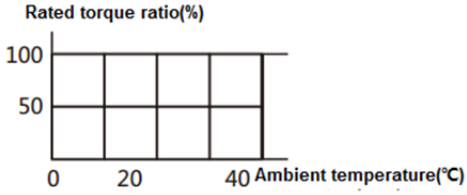

■ MG130A

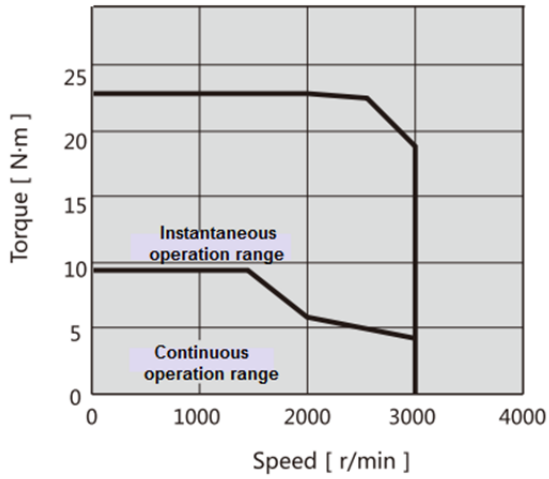

Continuous torque -Ambient temperature

· Without oil seal

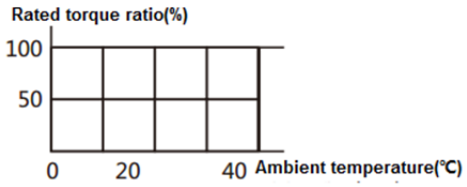

· With oil seal

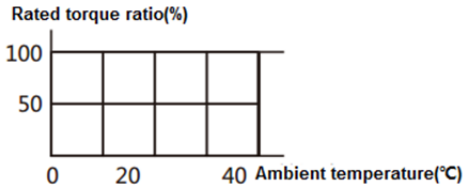

■ MG180A

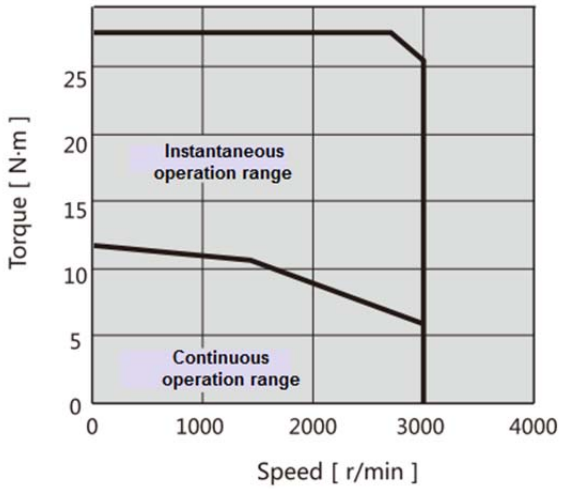

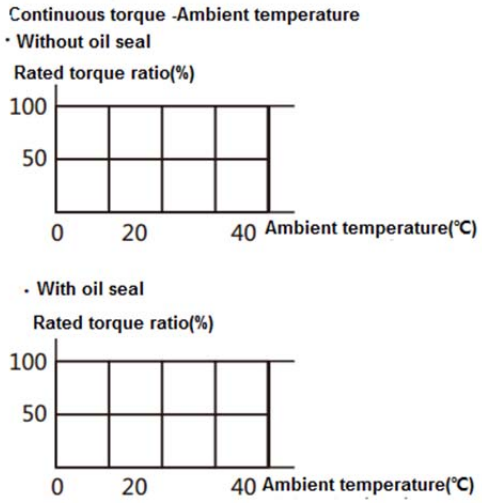

2.2.4 Encoder specifications

Table 2.2.3 Encoder specifications

Items	Description		Remarks
Motor Model Name	M□□□□□□□N** (17bit)	M□□□□□□□A** (17bit)	-
Power supply voltage VCC	DC 4.5V~5.5V		Ripple voltage 5% or less
External power supply BAT	-	DC 2.4V~5.5V	-
External capacitor CAP	-	DC 2.4V~5.5V	-
Current consumption	160mA (Typical)		Inrush current are excluded.
State of low power consumption	-	10μA(Typical)	Battery voltage 3.6V at motor stop at room temperature
Single-turn resolution	Absolute 131, 072(17bit)		-
Multi-revolution count	-	-	-
Maximum speed	6, 000 r/min		-
Input/output form	Differential transmission		-
Count-up direction (Note 1)	CCW		-
Transmission type	Half-duplex asynchronous serial		-
Communication speed	2.5Mbps		-
Working temperature	0~85°C		-
External magnetic interference	±2mT(20G) or less		-

Note 1) Up-counting direction

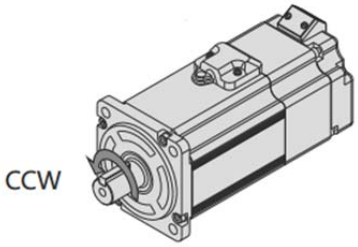

※Look from the front flange, rotate as counterclockwise, that is CCW.

[Note]

※When the motor rotates under 180 degree, single revolution accuracy decreases.

※When using motor with brake, please follow the brake voltage specified in the manual.

※When the brake voltage is under 12V or use under the reverse polarity, single revolution accuracy decreases.

2.2.5 About oil seal

Please use oil seal to prevent the entry of oil into the servo motor via the output shaft when using motor with gearbox. All the SV-X3E series motors are available with the oil seal. Please specify oil seal when ordering.

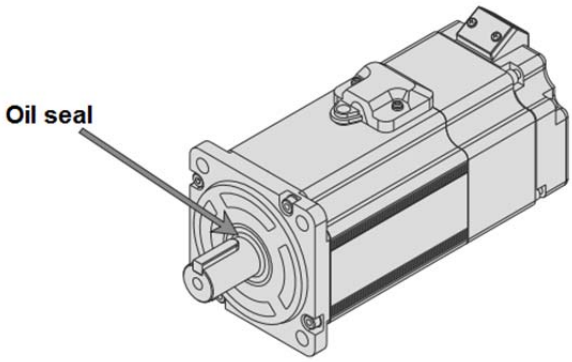

Figure 2.2.3 Oil seal

3. Product installations and dimensions

3.1 Installation environmental conditions

About the environmental conditions, make sure to follow the company's instructions. If you need to use the product outside the scope of the specified environmental conditions, please consult HCFA Corporation in advance.

① Keep it away from the direct sunlight.

② Drive must be installed inside the cabinet.

③ Keep it away from water, oil (cutting oil, oil mist) and moisture.

④ Do not install the equipment under the conditions with water, corrosive and flammable gas.

⑤ Free from the dust, iron powder, cutting powder and so on.

⑥ Keep it away from the area with high temperature, excessive vibration or shock.

3.2 Installations and spacing

Impact & load

①The impact that the motor can stand should be less than 200m/s^2(20G). Don't apply excessive impact load to the motor during transportation, installing or uninstalling. And do not drag encoder, cable or connector during transportation.

②The pull claw device must be used when removing the motor from belt pulleys or couplings.

Connecting with mechanical system

①Permissible load to the motor shaft has been specified in this user manual. Exceeding the permissible load will shorten the shaft service life and cause damages to the shaft. Please use coupling which could fully absorb eccentric load.

②The stress on the encoder cable should be less than 6kgf during installations.

③The bending radius of power cable and encoder cable should be R20mm and more.

Installation direction and clearance of drives

Leave sufficient space around the drive to ensure the heat dissipation and convection in the cabinet when installing the drive.

Figure 3.3.1 Installation clearance for drives

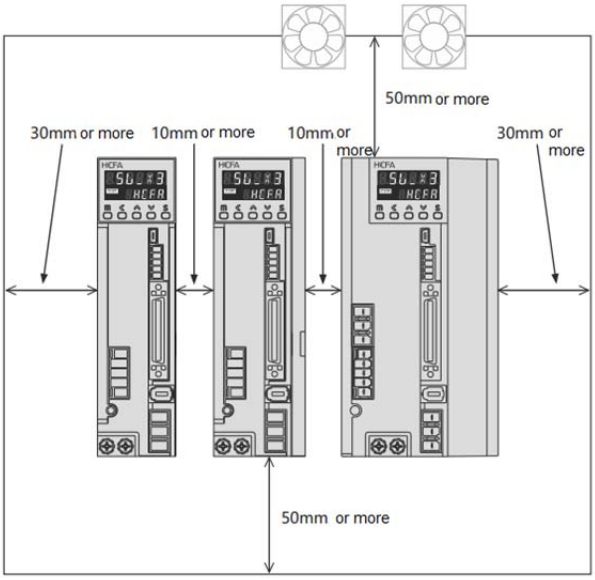

●Install the drives in the vertical direction. Please use two M5 screws to fix the drive 750W or below. Please use three M5 screws to fix the drive 1KW or above.

●When the drives are installed in the sealed cabinet, in order to ensure that surrounding temperature between internal boards is less than 55□C, cooling fan or cooler need to be installed to reduce the temperature.

●The temperature on the surface of cooling plate would be 30°C higher than the surrounding temperature.

●Use heat-resistant material for wiring and isolate wiring from the machine and other cables which are easily heated.

●The service life of servo drive depends on the temperature around the electrolytic capacitor. When the electrolytic capacitor is close to the service life, the static capacity will decrease and internal resistance will increase. Consequently, it will lead to overvoltage alarm, malfunction caused by noise and components damage. The service life of electrolytic capacitor is approx. 5 to 6 years under such condition: average annual temperature 30°C, load rate 80% and operation of less than 20 hours a day on average.

Additional instructions

①The motor shaft is covered with anti-rust oil before shipping form factory. Please conduct such anti-rust treatment again to prevent the shaft from rust when installing.

②Never disassemble the encoder or motor.

③Please use the same power supply (GND and 24VDC) for control voltage and upper controller.

④Do not remove or service the encoder battery until the main power supply is switched OFF.

⑤After switching off the main power supply, please note that there is residual voltage of approx. 30 seconds on the power components.

⑥Do not replace the fuse.

⑦Servo drives 750W or above are installed with a cooling fan on the right side. Do not touch or block the ventilation ports of the servo drive

3.3 Dimensions of servo motors

MM005A/MM010A
Medium inertia

Old version (2017)

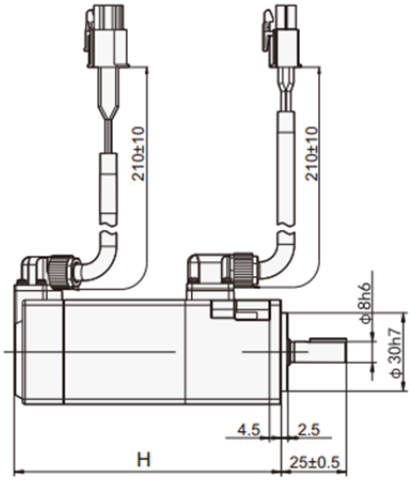

H: Unit mm

	50W	100W
With oil seal	110.5(70)±1	126.5(86)±1
No oil seal	102(62)±1	118(78)±1

※ Dimensions with parentheses show dimensions with no brake.

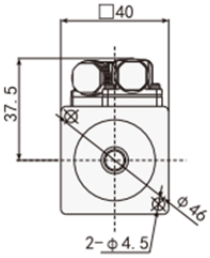

■ Shaft-end dimension

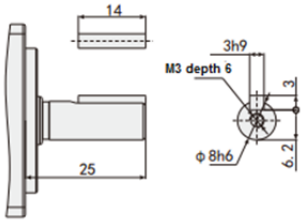

MM005A/MM010A
Medium inertia

New version(2018)

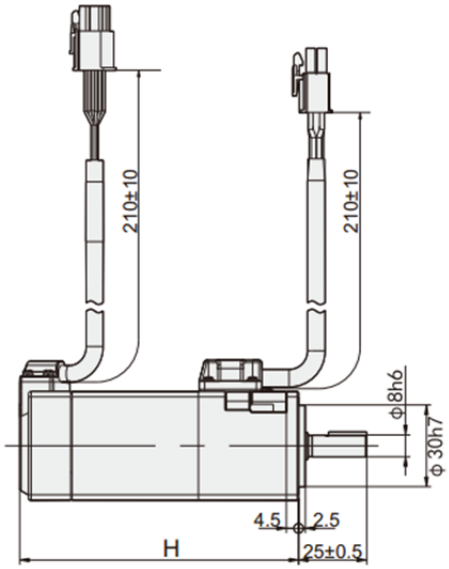

H: Unit mm

	50W	100W
With oil seal	110.5(70)±1	126.5(86)±1
No oil seal	102(62)±1	118(78)±1

※ Dimension with parentheses show dimensions with no brake.

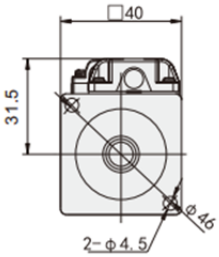

■ Shaft-end dimension

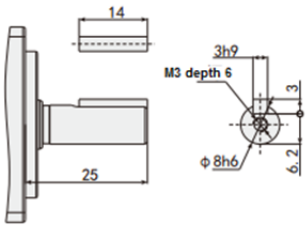

MA020A
Low inertia

MH020A
High inertia

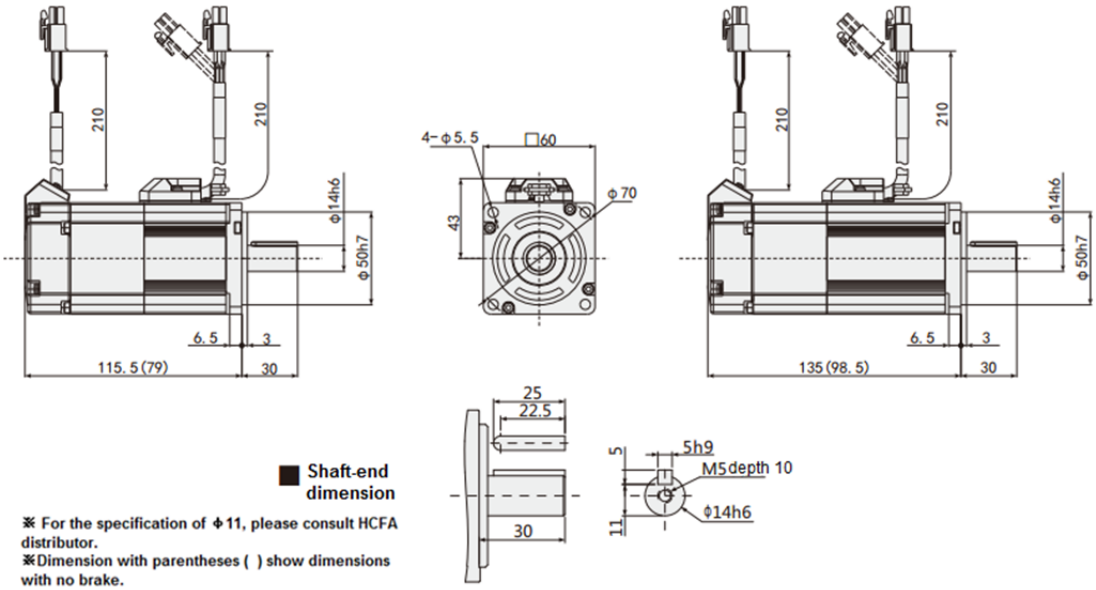

■ **Shaft-end dimension**

※ For the specification of Φ11, please consult HCFA distributor.
※Dimension with parentheses ( ) show dimensions with no brake.

MA040A
Low inertia

MH040A
High inertia

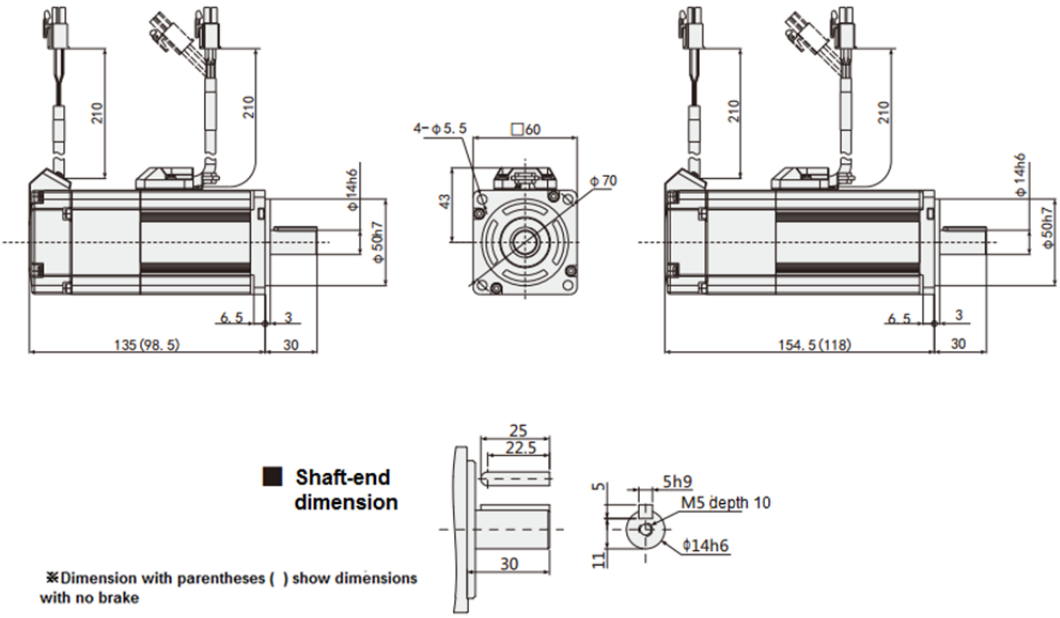

■ **Shaft-end dimension**

※Dimension with parentheses ( ) show dimensions with no brake

MA075A
Low inertia

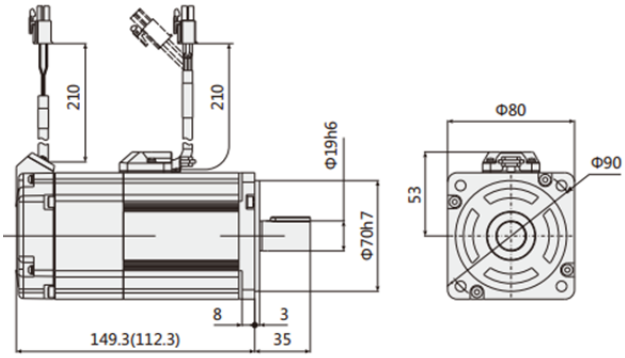

MH075A
High inertia

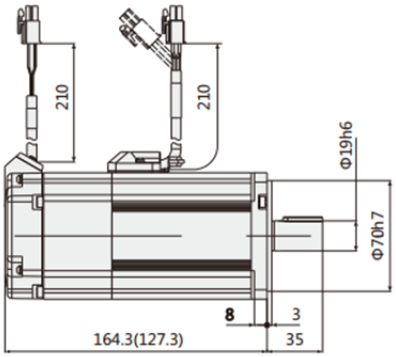

■ **Shaft-end dimension**

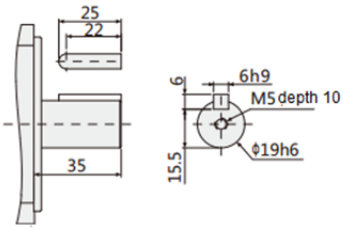

※Dimension with parentheses( )show dimensions with no brake.

MM100A
Middle inertia

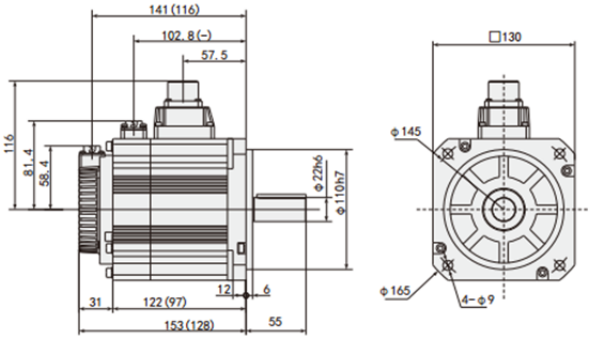

MH100A
High inertia

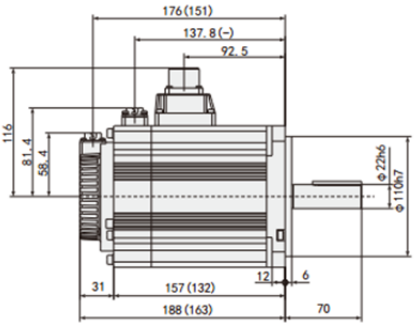

■ **Shaft-end dimension**

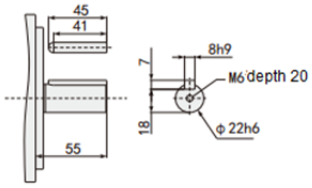

※Dimension with parentheses( )show dimensions with no brake.

MM150A
Middle inertia

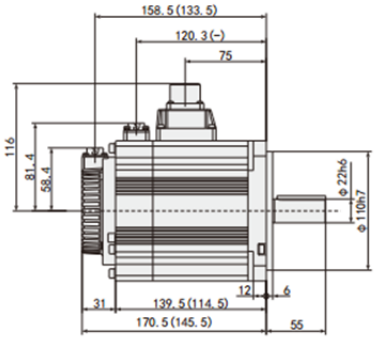

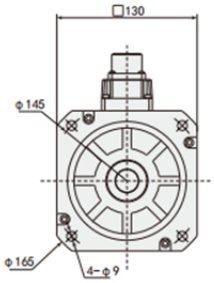

MH150A
High inertia

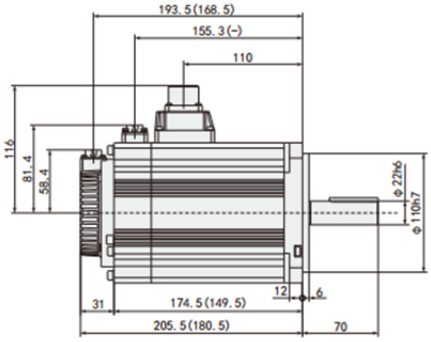

■

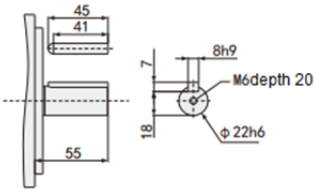

※Dimension with parentheses( )show dimensions with no brake.

MM200A
Middle inertia

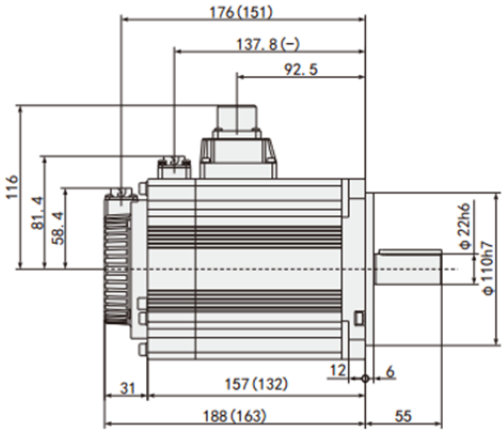

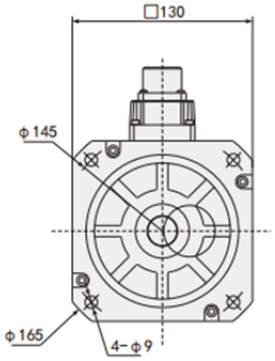

■ Shaft-end dimension

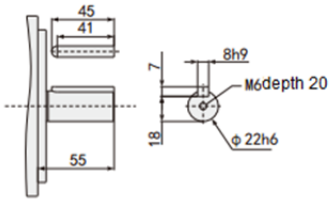

※Dimension with parentheses ( ) show dimensions with no brake.

MA100A
Low inertia

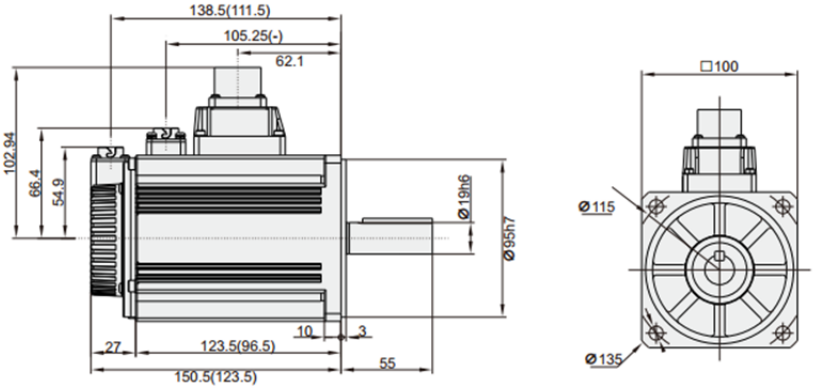

■ Shaft-end dimension

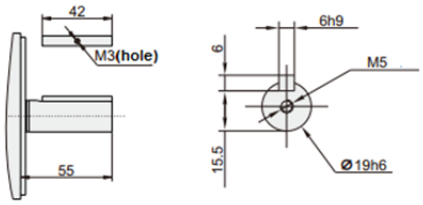

※ Dimension with parentheses ( ) show dimensions with no brake.

MA150A
Low inertia

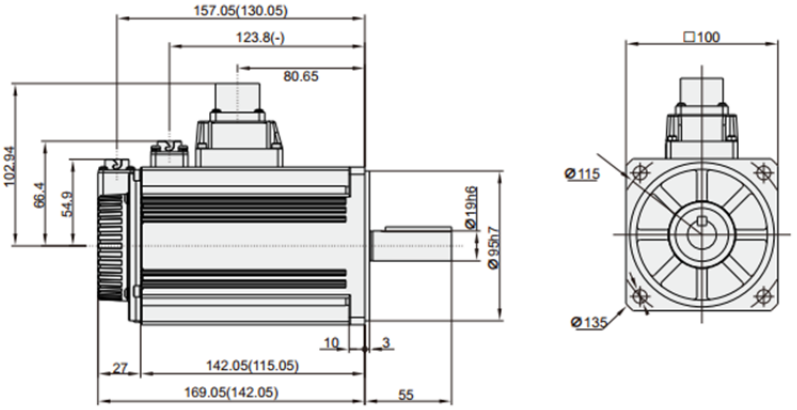

■ Shaft-end dimension

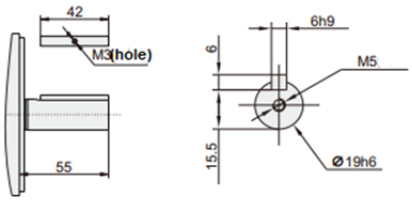

※ Dimension with parentheses ( ) show dimension with no brake.

MA200A
Low inertia

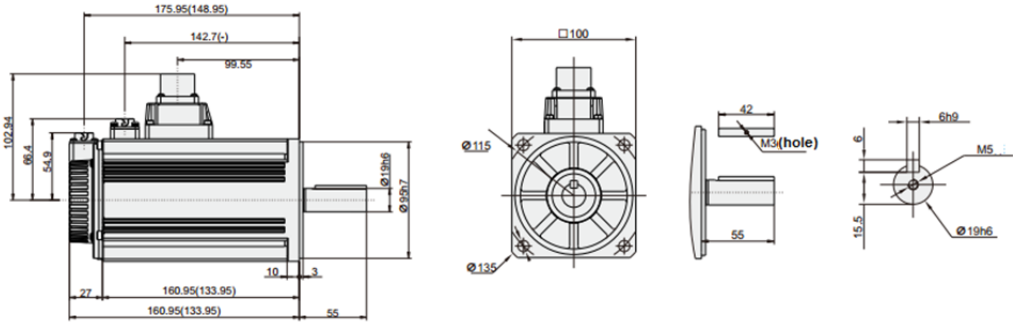

※ Dimension with parentheses ( ) show dimensions with no brake.

MG085A
Low speed & high torque

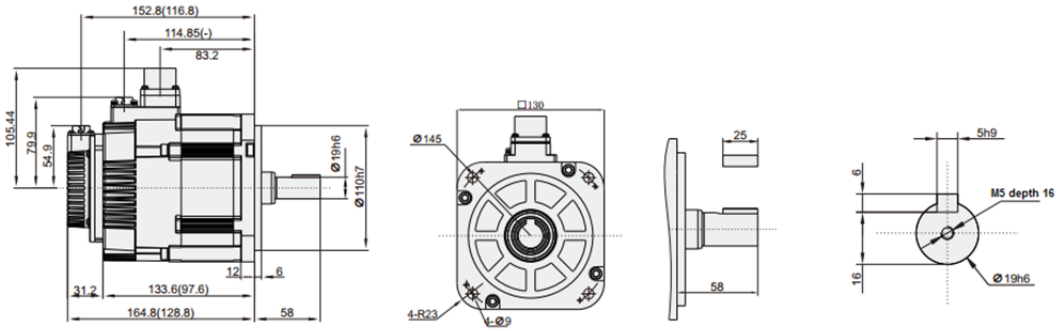

※ Dimension with parentheses ( ) show dimensions with no brake.

MG130A
Low speed &high torque

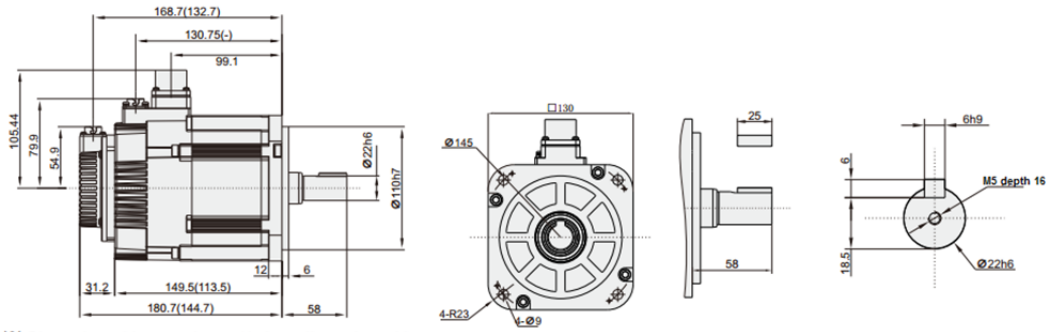

※ Dimension with parentheses ( ) show dimension with no brake.

MG180A
Low speed&high torque

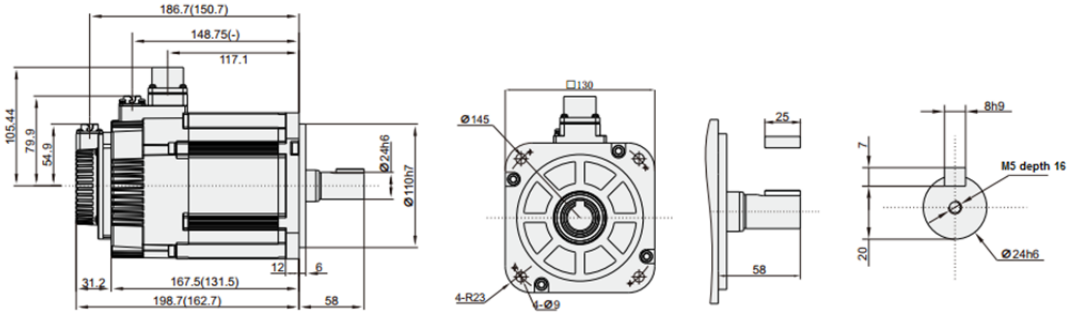

※ Dimension with parentheses ( ) show dimension with no brake.

3.4 Dimensions of servo drives

Models of 200W or below

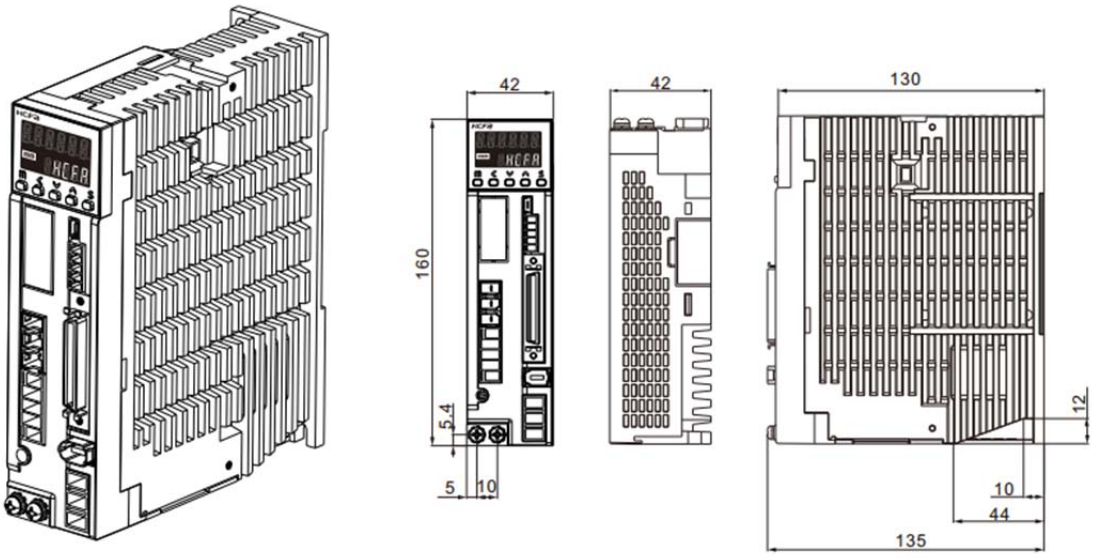

Models of 400W/750W

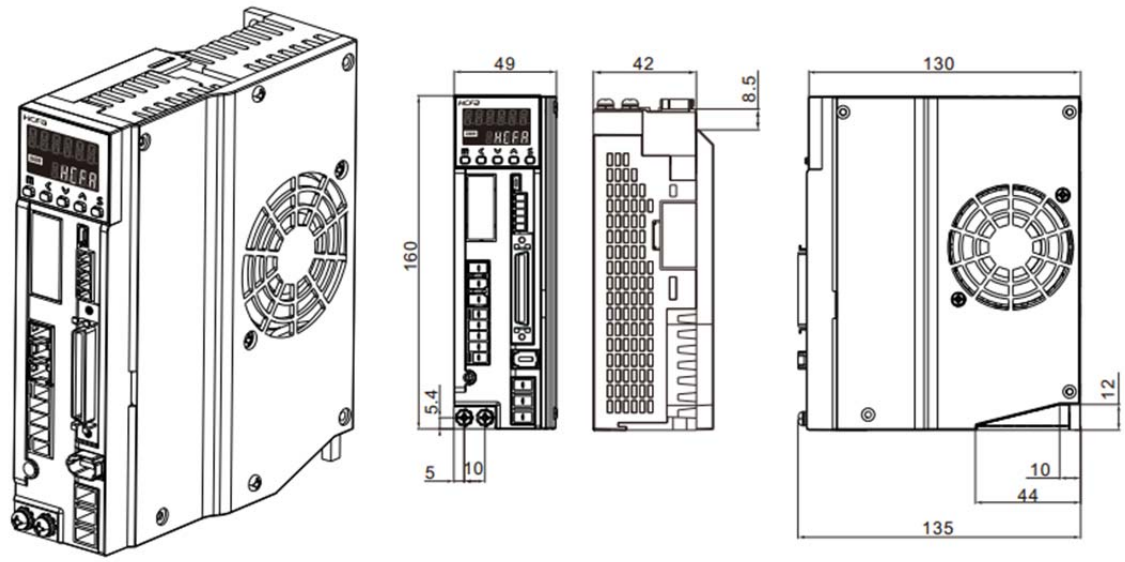

Models of 1000W or above

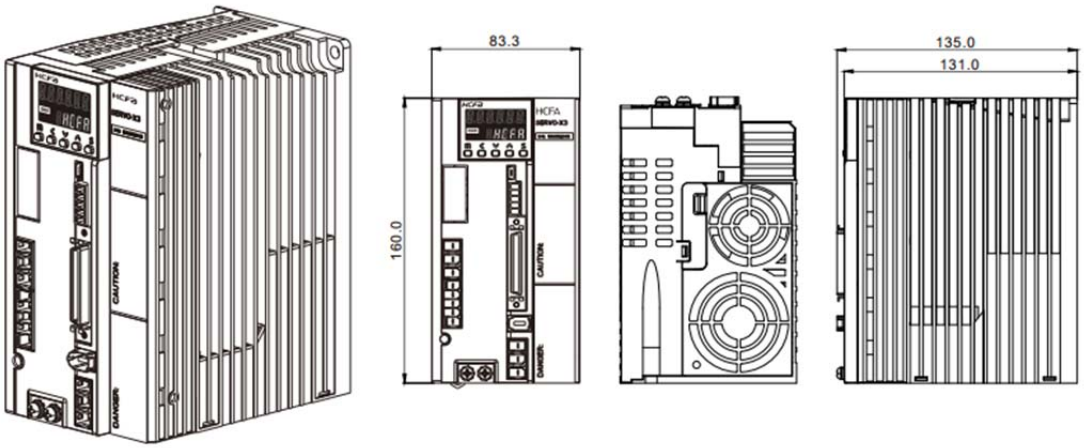

4. Servo motor and drive wrings

4.1 System wiring diagram

4.1.1 System wiring diagram

Figure 4.1.1 System Wiring diagram

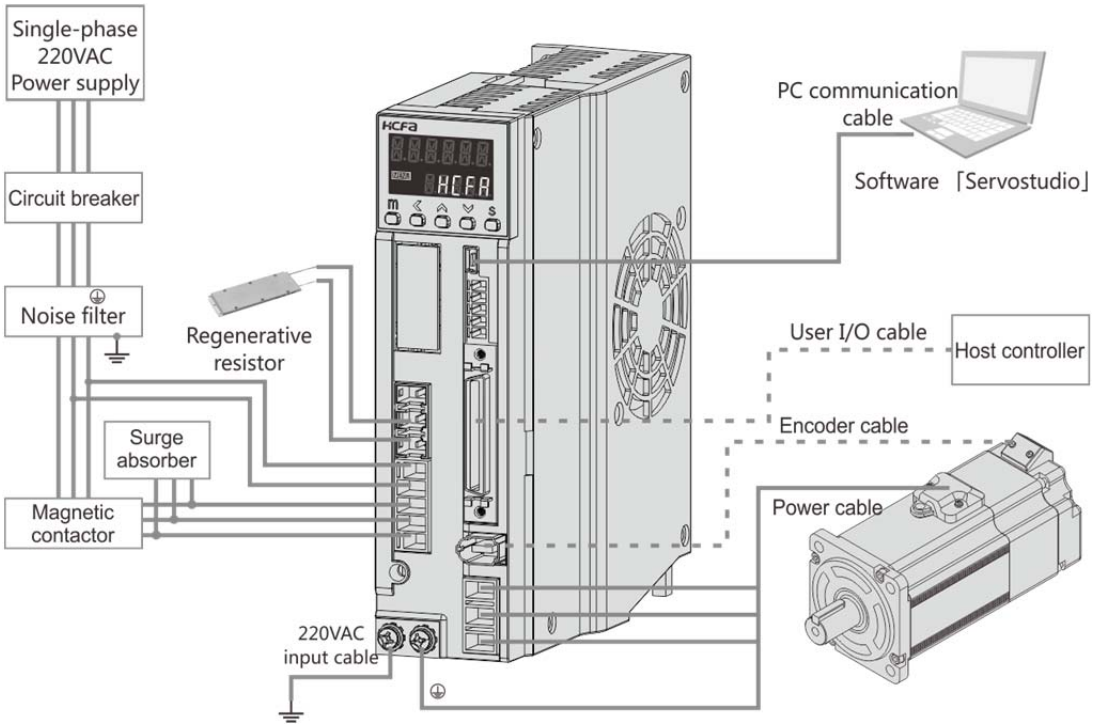

※ Control circuit power supply and main circuit power supply should be wired from the same 200VAC main power supply.

※ A twisted-pair shielded cable should be used if I/O cable length is over 50cm. Encoder cable should be less than 20m.

Caution

① Please note that there is high voltage in the solid line of wiring diagram when wiring and using.

② The dotted lines in the wiring diagram indicates non-dangerous voltage circuit.

4.1.2 Selection of peripheral devices

Table 4.1.1 Selection of peripheral devices

Items	Description
Peripheral devices	Conform to European EC Directive. Select the device which meets corresponding standards and install them in accordance with Figure 4.1.1 System Wiring diagram
Installation environment	Install the drive in environment conforming to Pollution degree 2 or 1 of IEC60664-1.
Power supply 1: 00~230VAC (main and control circuit)	This product can be used under the conditions that conform to IEC60664-1 and overvoltage category Ⅱ.
Power supply 2: 24VDC ♦ I/O power supply ♦ Power supply for brake	24VDC external power supply should use SELV power supply (※) and be less than 150W. This is the CE corresponding conditions. ※SELV: safety extra low voltage (Reinforced insulation is needed for safety extra low

release	voltage, non-dangerous voltage and dangerous voltage.)
Wiring	Please use withstand voltage cables which are equivalent to AWG18/600V or AWG14/600V for motor power cable, encoder cable, AC220 input cable, FG cable and main circuit power distribution cable under multi-axis drive structure respectively when drives are less than 750W or more than 1kW .
Circuit breaker	Switch off the power supply to protect power cord when overcurrent occurs. Make sure to use the breaker between power supply and interference filter that conforms to IEC specification and UL recognition in accordance with the User manual. Please use the breaker with leakage function recommended by HCFA in order to meet EMC standards.
Noise filter	To prevent the outside interference from power cables please use the interference filter recommended by HCFA in order to meet EMC standards.
Magnetic contactor	Switch main power supply (ON/OFF). And use it after installing a surge absorber.
Surge absorber	Please use the surge absorber recommended by HCFA.
Interference filter for signal cable / ferrite core	Please use the interference filter recommended by HCFA in order to meet EMC standards.
Regenerative resistor	This product is not equipped with regenerative resistor. The external regenerative resistor is necessary when the internal capacitor cannot absorb more regenerative power and regenerative voltage alarm is ON. For details, refer to 1.4 Model selection of external regenerative resistor. Use a built-in thermostat and set overheat protect circuit.
Grounding	This product belongs to Class 1 and need grounding protection. Grounding should be executed for the case and cabinet that conforms to EMC. The following symbol indicates the protection grounding terminal? ⏚

4.2 Drive terminal descriptions

4.2.1 Drive terminal descriptions

Figure 4.2.1 Drive terminal descriptions

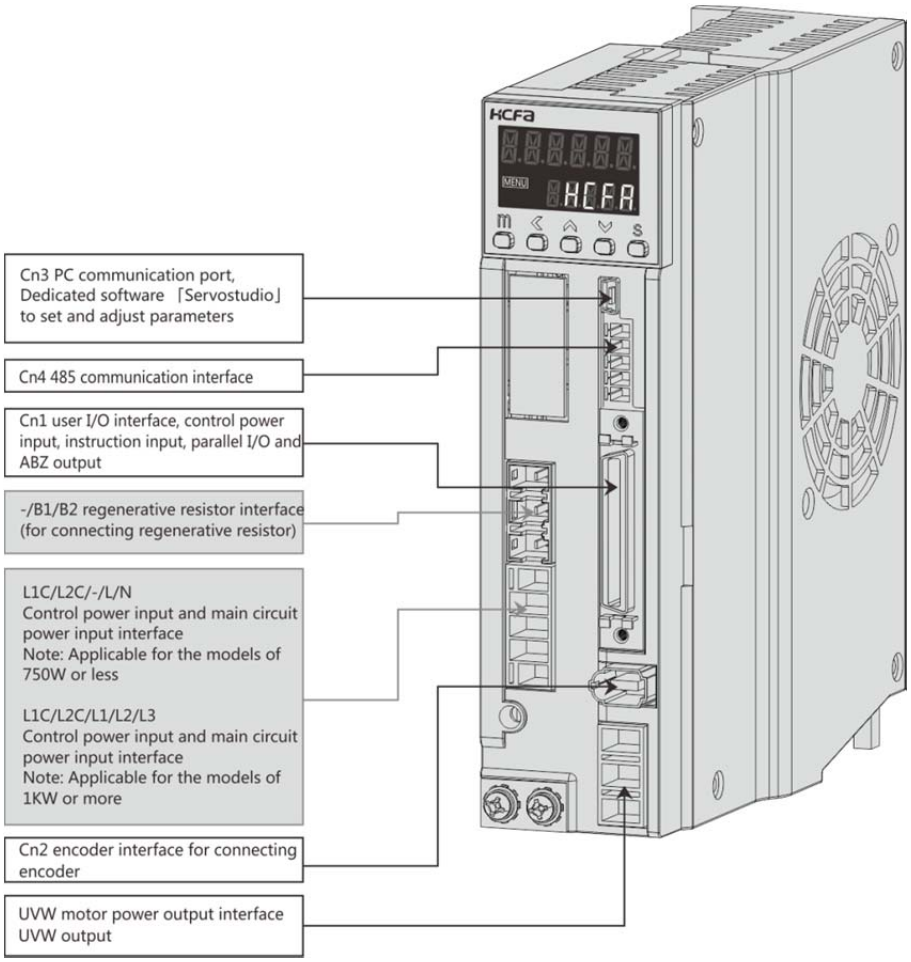

Table 4.2.1 Terminal arrangement of drive (750W or below)

Name	Symbol	Pin No.	Signal name	Contents
Regenerative resistor	B1/B2/	2	B1	P interface of regenerative resistor
		3	B2	N interface of regenerative resistor
AC power input	L1C/ L2C/ L/N	1	L1C	AC power input
		2	L2C	
Single-phase 200VAC input		4	Primary Power 1	L
		5	Primary Power 2	N
Motor power output	U/V/W	1	U	Motor power U phase output
		2	V	Motor power V phase output
		3	W	Motor power W phase output
Encoder	CN2	1	VCC	Encoder power supply 5V output
		2	GND	Signal grounding
		3	NC	-
		4	NC	-

		5	+D	Encoder signal: data input/output
		6	-D	Encoder signal: data input/output
		-	FG	Connect SHIELD to the connector housing
PC communication	CN3	1	VBUS	USB power supply
		2	D-	USB data-
		3	D+	USB data+
		4	NC	-
		5	GND	USB signal grounding
Communication	CN4	3	485	485 signal from upper controller
		4	/485	/485 signal from upper controller
		5	SG	Communication signal grounding
External fan	CN14	1	24V	24V for external fan
		2	G24	GND for external fan
		3	NC	-
I/O control terminal	CN1	Refer to Section 4.5 Wiring description of I/O control terminal (CN1)		

Table 4.2.2 Terminal arrangement of drive connector (1kW or above)

Name	Symbol	Pin No.	Signal name	Contents
Regenerative resistor	B1/	2	B1	P interface of regenerative resistor
	B2/	3	B2	N interface of regenerative resistor
AC power input	L1C/	1	L1C	AC power input
	L2C/	2	L2C	
Three-phase 200VAC input	L1/	3	Primary Power 1	L1
	L2/	4	Primary Power 2	L2
	L3	5	Primary Power 3	L3
Motor power output	U/V/W	1	U	Motor power U phase output
		2	V	Motor power V phase output
		3	W	Motor power W phase output
Encoder	CN2	1	VCC	Encoder power supply 5V output
		2	GND	Signal grounding
		3	NC	-
		4	NC	-
		5	+D	Encoder signal: data input/output
		6	-D	Encoder signal: data input/output
		-	FG	Connect SHIELD to the connector housing
PC communication	CN3	1	VBUS	USB power supply
		2	D-	USB data-
		3	D+	USB data+
		4	NC	-
		5	GND	USB signal grounding
Communication	CN4	3	485	485 signal from upper controller
		4	/485	/485 signal from upper controller
		5	SG	Communication signal grounding

External fan	CN14	1	24V	24V for external fan
		2	G24	GND for external fan
		3	NC	-
I/O control terminal	CN1	Refer to Section 4.5 Wiring description of I/O control terminal (CN1)		

4.3 Terminal arrangement and wire color of motor connectors

4.3.1 Motor connector and pins arrangement (750W or below)

Figure 4.3.1 Motor connector and pins arrangement

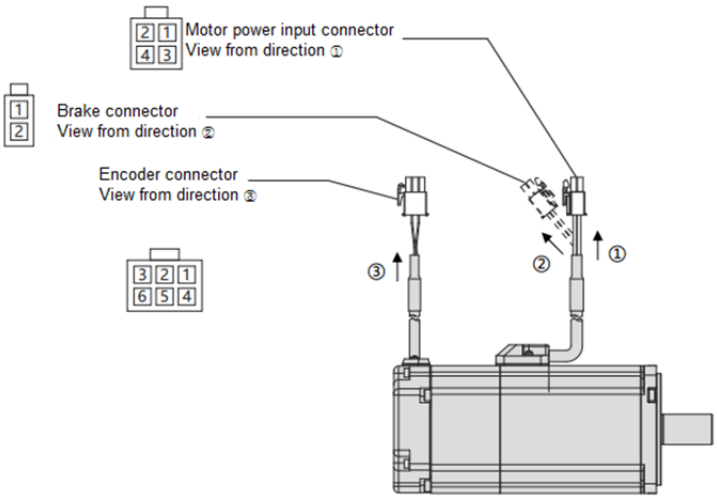

Table 4.3.1 Cable list (For motor of 750W or below)

Name	Cable
Motor power input	AWG18
Brake Note 1)	AWG22
Encoder (Incremental)	Power supply: AWG22
Encoder (Absolute)	Signal: AWG24

Note 1: For the motor with brake.

Table 4.3.2 Terminal arrangement and wire color for motor of 750W or below

Name	Pin No.	Signal name	Contents	Wire color
Motor power input	1	U	Motor power U phase	Red
	2	V	Motor power V phase	White
	3	W	Motor power W phase	Black
	4	FG	Motor housing grounding	Green
Brake	1	BRK+	Brake power supply 24VDC	Yellow(orange)
	2	BRK-	Brake power supply GND	Blue(brown)
Encoder (incremental/ absolute)	1	-	NC	-
	2	+D	Serial communication data + data	White (red dotted)
	3	-D	Serial communication data - data	White (black dotted)
	4	VCC	Encoder power supply 5V	Orange (red dotted)
	5	GND	Signal ground	Orange (black dotted)
	6	SHIELD	Shielded wires	Black

※1 For motor with brake.

※2 External capacitor and battery are taking GND as the reference potential.

※3 Internal connection (IC) has been connected internally. Do not connect it with any other wires.

4.3.2 Motor connector and pins arrangement (1kW or above)

Figure 4.3.2 Motor connector and pins arrangement (1kW or above)

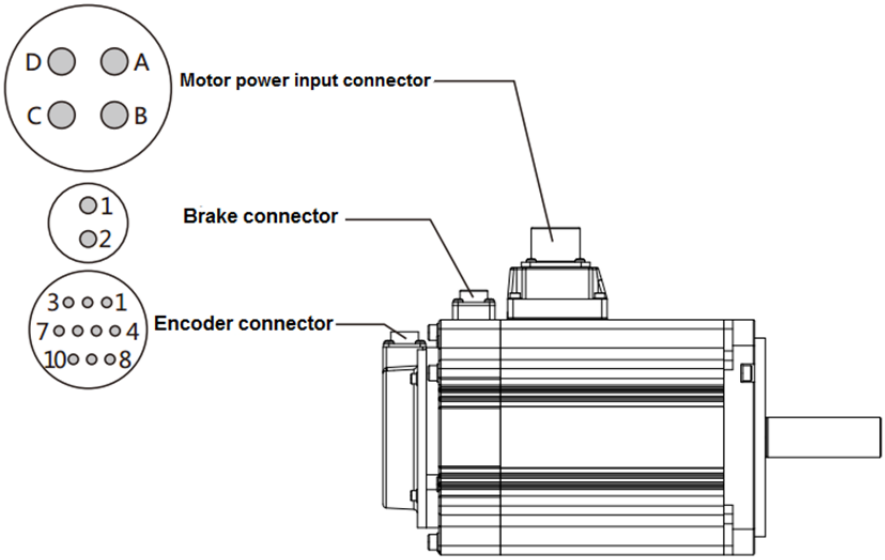

Table 4.3.3 Cable list (for motor of 1kW or above)

Name	Cable
Motor power input	AWG14
Brake	AWG18
Encoder (Incremental)	Power supply: AWG22
Encoder (Absolute)	Signal: AWG24

Table 4.3.4 for the motor of 1kW or more

Name	Pin No.	Signal name	Contents
Motor power input	A	U	Motor power U phase
	B	V	Motor power V phase
	C	W	Motor power W phase
	D	FG	Motor housing grounding
Brake	1	BRK1	Brake power supply 24VDC
	2	BRK2	Brake power supply GND
Encoder (incremental)	1	VCC	Encoder power supply 5V output
	2	GND	Signal ground
	3	-	NC
	4	-	NC
	5	+D	Serial communication data + data
	6	-D	Serial communication data - data
	7	-	NC
	8	-	NC
	9	-	NC

	10	SHIELD	Shielded wires
Encoder (Absolute)	1	VCC	Encoder power supply 5V output
	2	GND	Signal ground
	3	CAP	External capacitor (※1)
	4	BAT	External battery (※1)
	5	+D	Serial communication data +
	6	-D	Serial communication data -
	7	IC	Internal connection (※2)
	8	IC	Internal connection (※2)
	9	GND	Signal ground
	10	SHIELD	Shielded wires

※1 External capacitor and battery are taking GND as the reference potential.

※2 Internal connection (IC) has been connected internally. Do not connect it with any other wires.

4.4 RS-485 communication wirings

Figure 4.4.1 Multi-station connection example

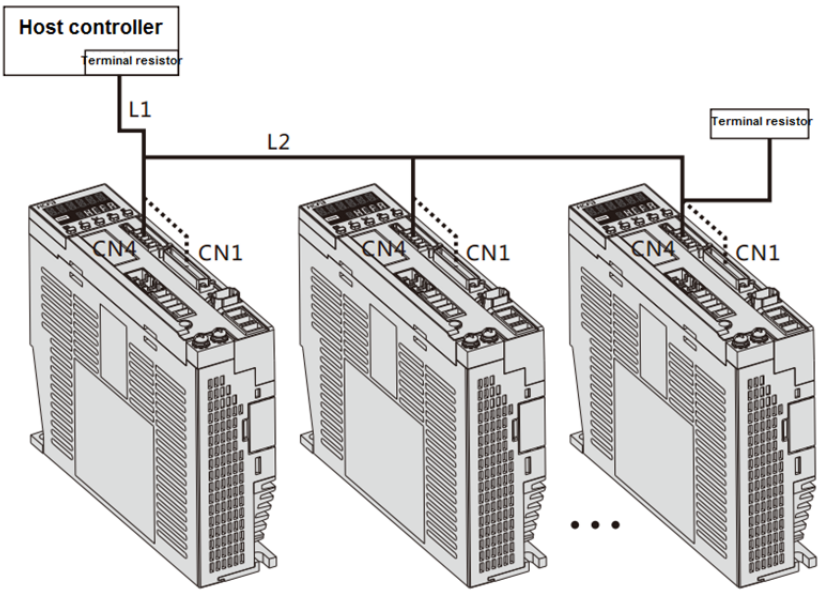

L1=5m (max): cables between upper controller and servo drive should be less than 5m.

L2=250mm (max): cables between each servo drive should be less than 250mm.

Terminal resistor: Connect the terminal resistor between the Pin A & B of CN4 or Pin 43 & 44 of CN1 at the last drive and upper controller (220Ω).

4.5 I/O control terminal (CN1) descriptions

Figure 4.5.1 Description of I/O control terminal

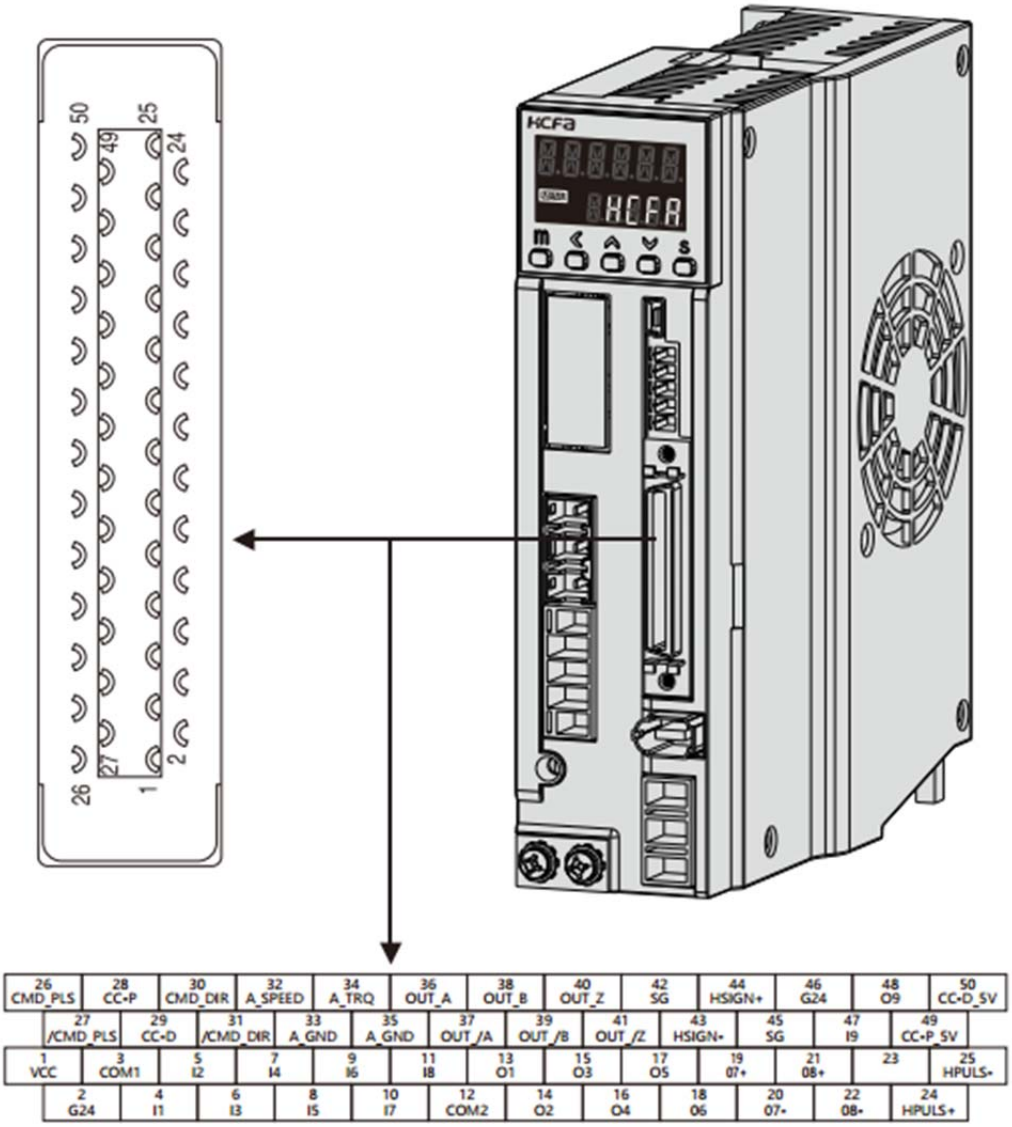

Table 4.5.1 Descriptions of I/O control terminal

Pin No.	Signal name	Contents
1	24V	Drive power supply 24V output
2	G24V	Drive power supply GND
3	COM+	I/O power supply input
4	I1	Digital signal input
5	I2	Digital signal input
6	I3	Digital signal input
7	I4	Digital signal input
8	I5	Digital signal input

9	I6	Digital signal input
10	I7	Digital signal input
11	I8	Digital signal input
12	COM-	I/O power supply GND
13	O1	Digital signal output
14	O2	Digital signal output
15	O3	Digital signal output
16	O4	Digital signal output
17	O5	Digital signal output
18	O6	Digital signal output
19	O7+	Digital signal output +
20	O7-	Digital signal output -
21	O8+	Digital signal output +
22	O8-	Digital signal output -
23	-	
24	HPULS+	High-speed pulse instruction input HPULS+
25	HPULS-	High-speed pulse instruction input HPULS-
26	CMD_PLS	Pulse instruction input PLS+
27	/CMD_PLS	Pulse instruction input PLS-
28	CC-P	Open-collector Pulse instruction input PLS power(24V)
29	CC-D	Open-collector Pulse instruction input DIR power(24V)
30	CMD_DIR	Pulse instruction input DIR+
31	/CMD_DIR	Pulse instruction input DIR-
32	AI1	Analog input
33	GND	Analog reference GND
34	AI2	Analog input
35	GND	Analog reference GND
36	OUTA	Pulse output A
37	/OUT_A	Pulse output /A
38	OUT_B	Pulse output B
39	/OUT_B	Pulse output /B
40	OUT_Z	Pulse output Z
41	/OUT_Z	Pulse output /Z
42	GND	Pulse output reference GND
43	HSIGN-	High-speed pulse instruction input HSIGN-
44	HSIGN+	High-speed pulse instruction input HSIGN+
45	GND	RS-485 reference GND

47	I9	Digital signal input
48	O9	Digital signal output
49	CC-P_5V	Open-collector Pulse instruction input PLS power (5V)
50	CC-D_5V	Open-collector Pulse instruction input DIR power (5V)

4.6 Standard wiring diagrams

Pulse instruction differential input

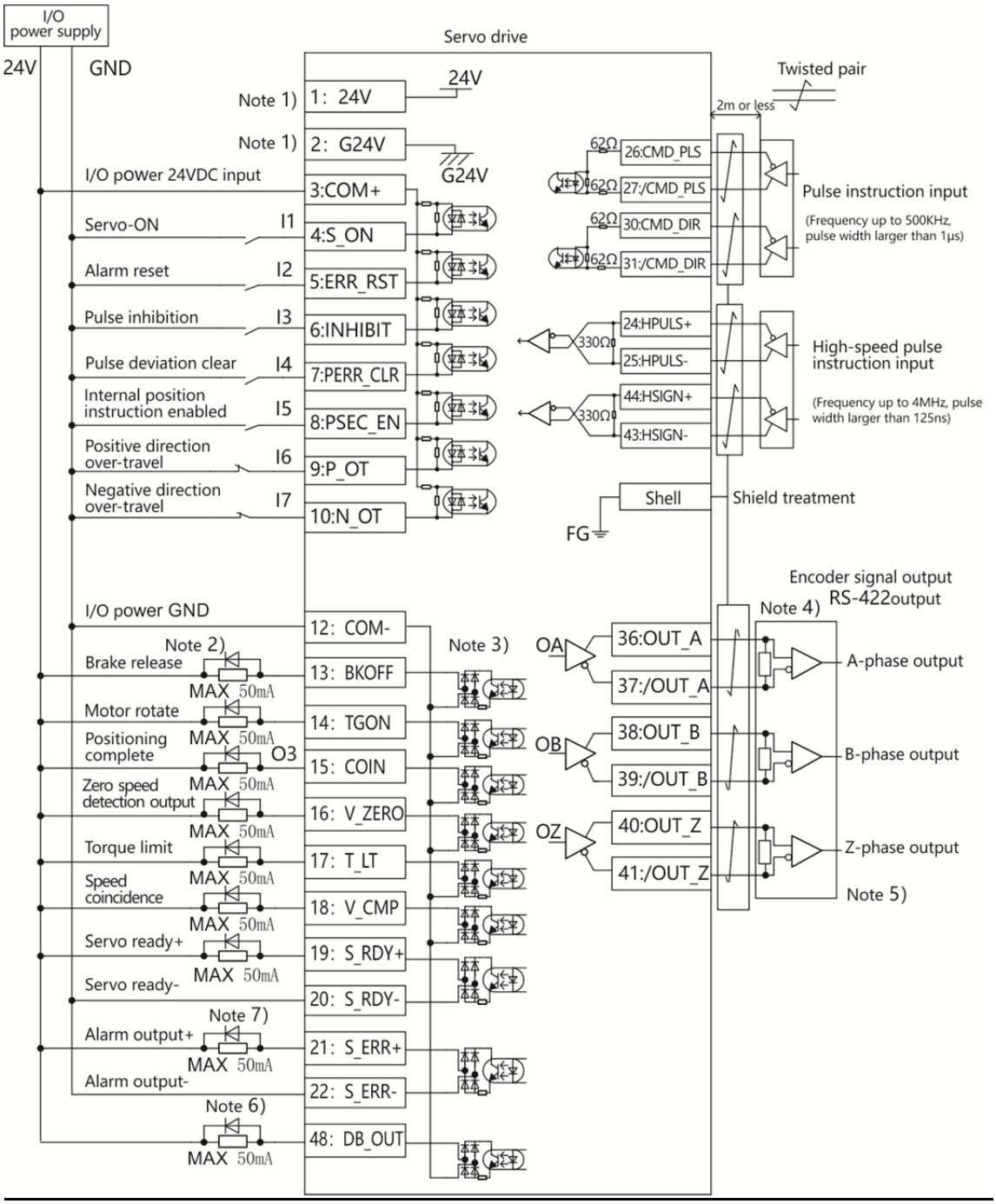

Pulse instruction 24V open-collector input

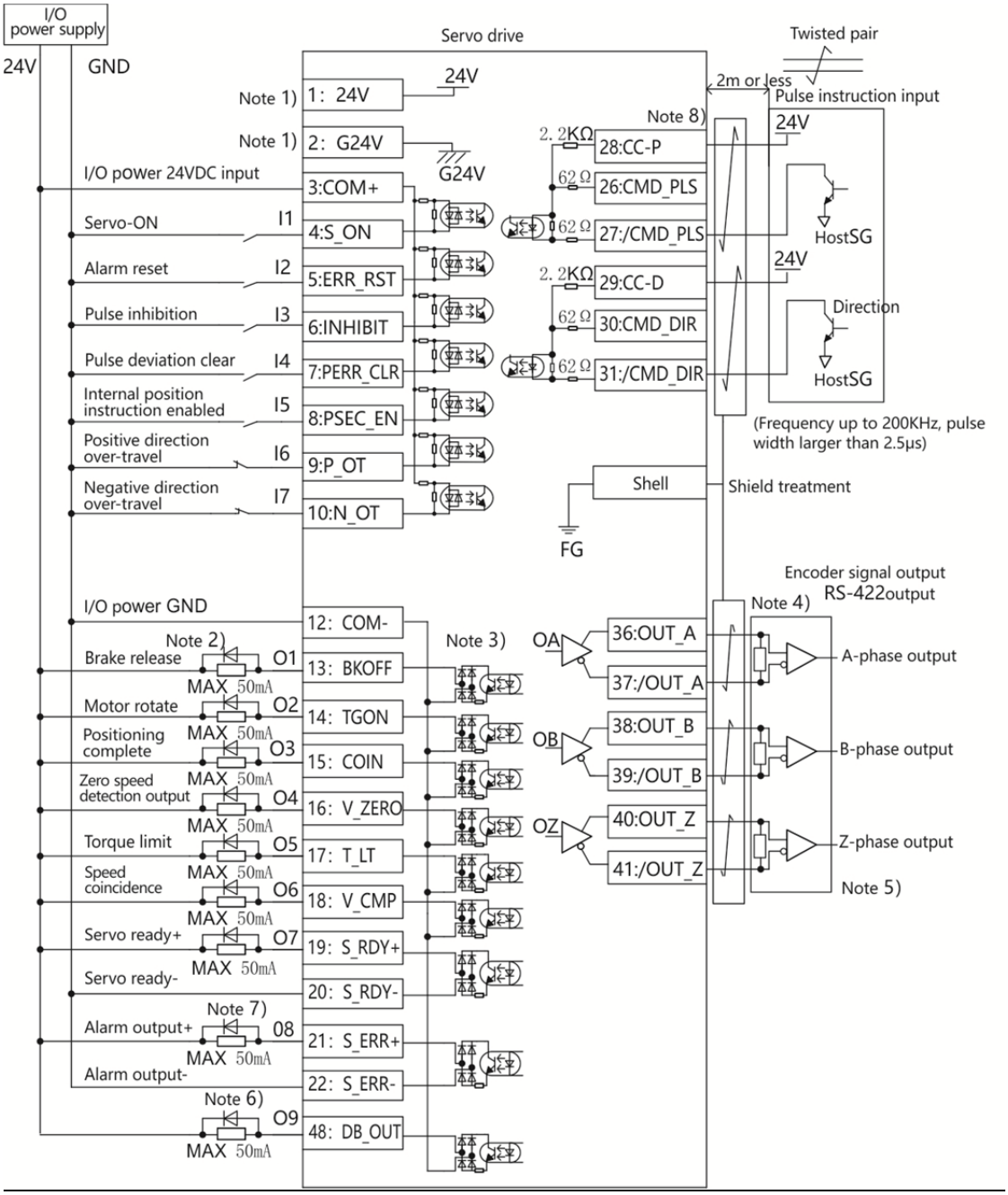

Pulse instruction 5V open-collector input

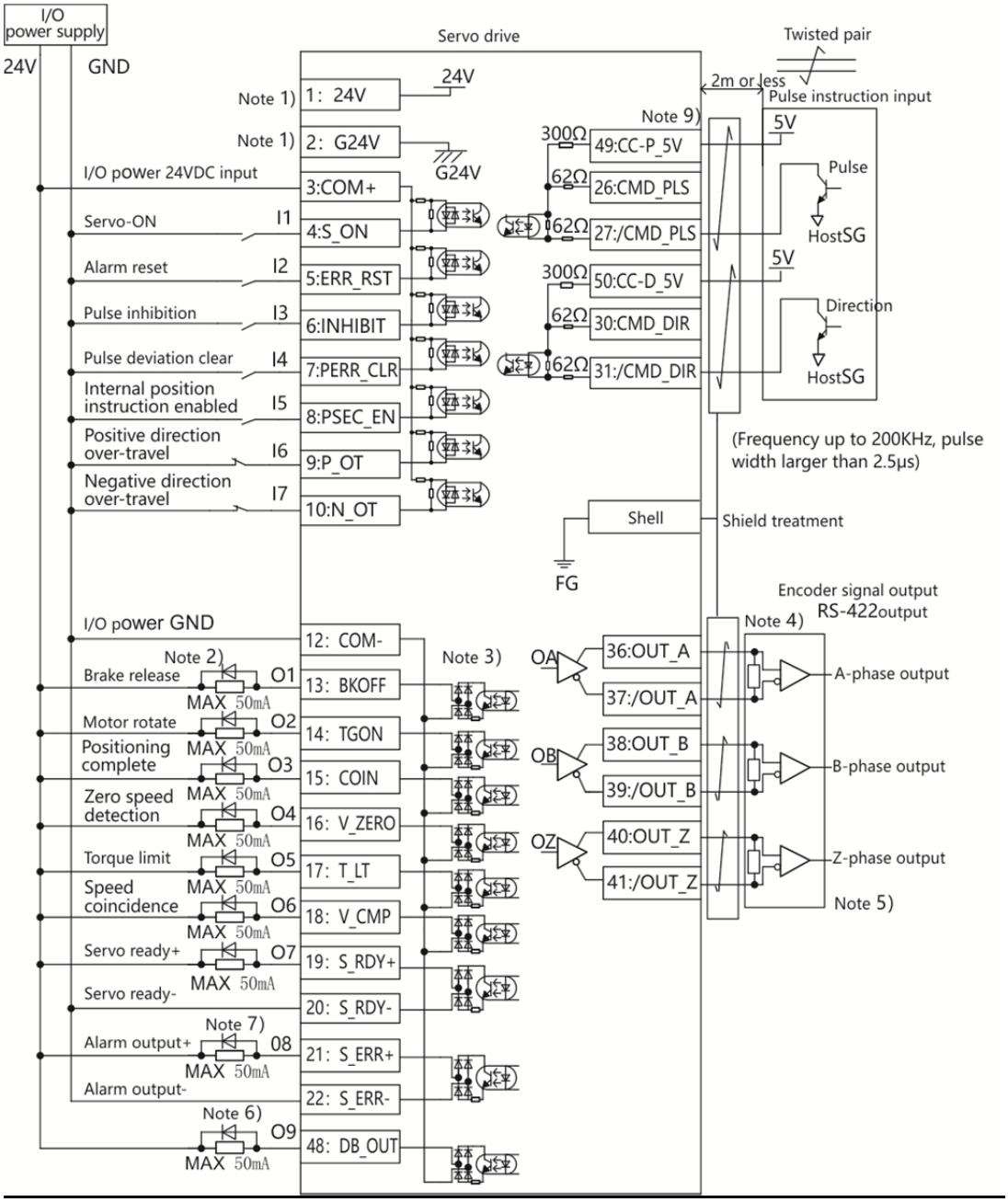

Analog input

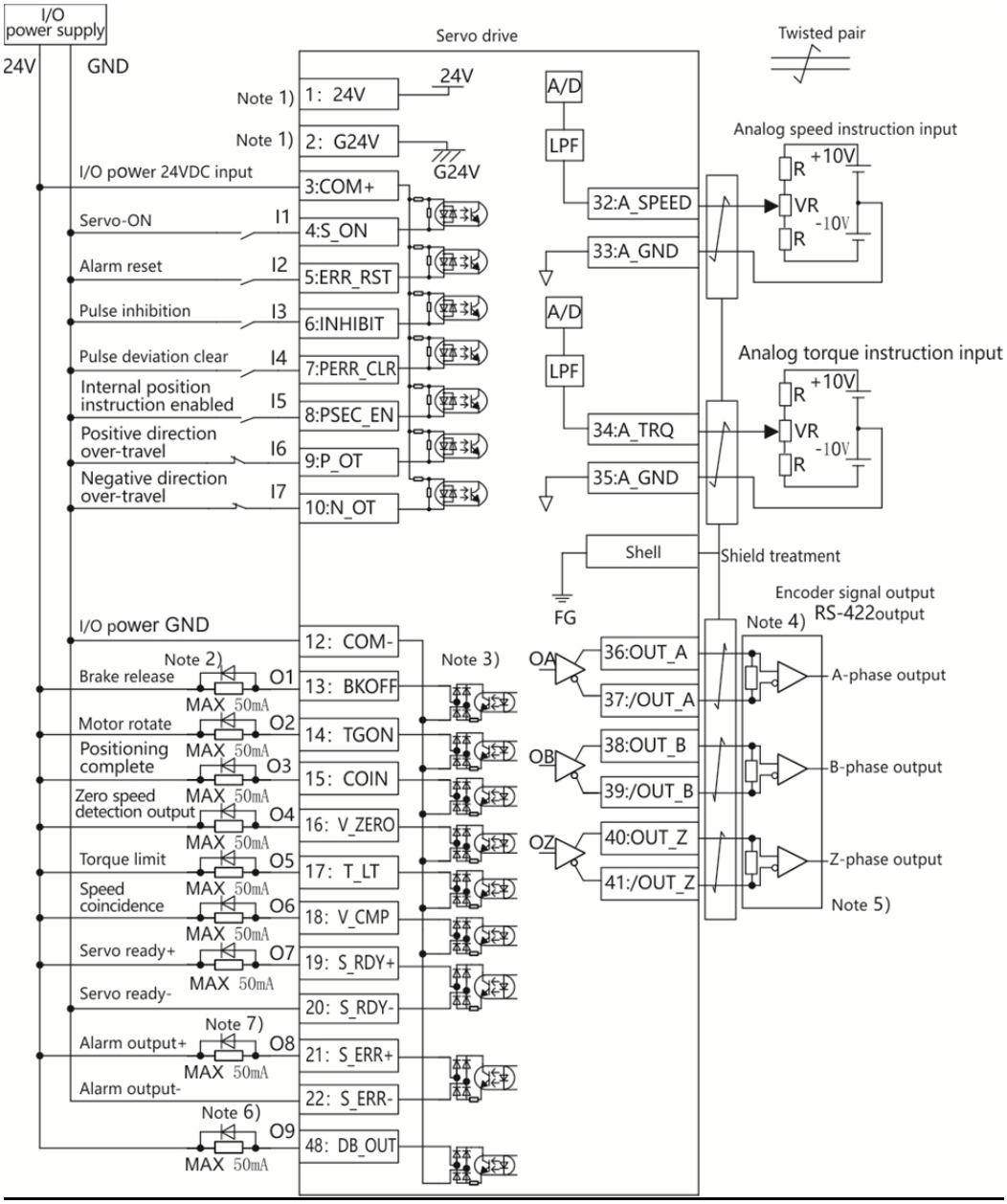

Note 1: Control power output (24V, G24V) can be used as I/O power (COM+, COM-). But the maximum output current is 150mA, and when driving the output such as relay and brake, please use external independent power.

Note 2: Please connect protective circuit (diode) when driving load with inductive component such as relay.

Note 3: Output pins can output high level or low level, based on different wiring mode. So perform the wiring according to actual needs. Make wiring as follows:

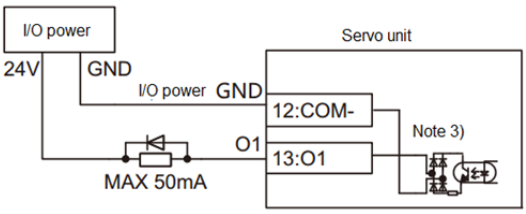

Pins output low level

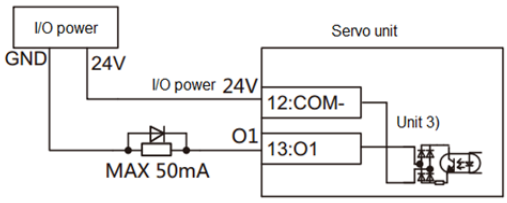

Pins output high level

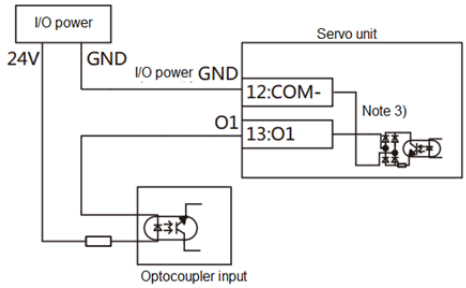

Pins output low level

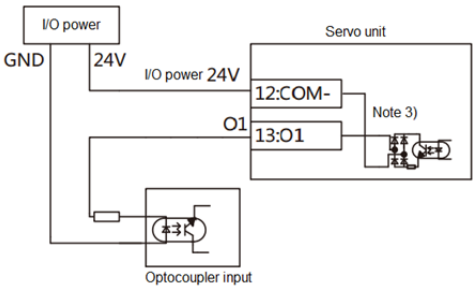

Pins output high level

Note 4: The differential pulse output and 485 communication circuits need to connect the terminal resistor.

Note 5: Connect the signal ground on the host control device of output signal of the encoder. The connection of signal ground and power supply GND may cause malfunction.

Note 6: O9 does not configure any functions by default, but can be used as the DO output and the OC output of Z-pulse. In this case, do not configure any DO function to O9 that is P04. 29 is set to 0, and P04. 54 is set to 1.

Note 7: The default function of O8 is the fault output, and the default output logic state is normally closed output.

Note 8: Two cases according to the pulse generation mode: NPN and PNP, as shown below.

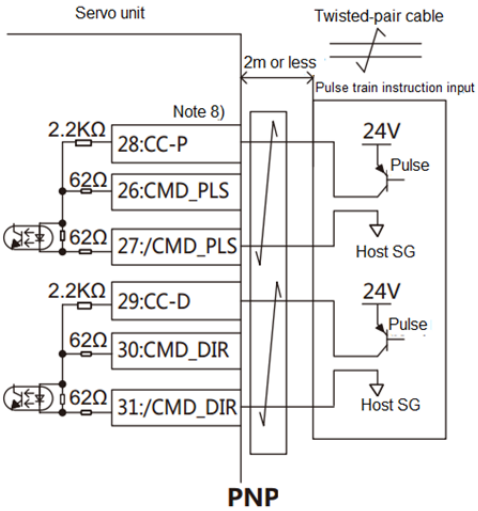

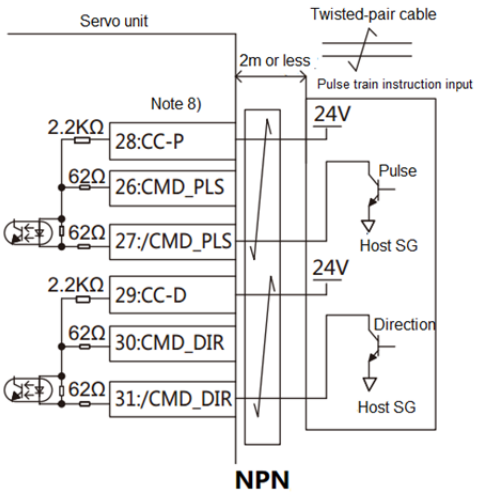

Note 9: Two cases according to the pulse generation mode: NPN and PNP, as shown below.

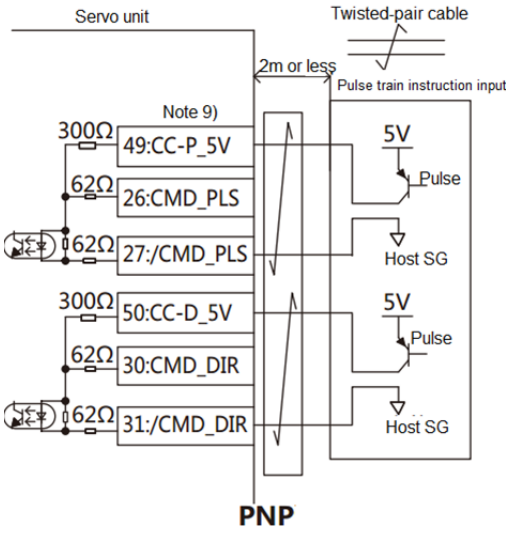

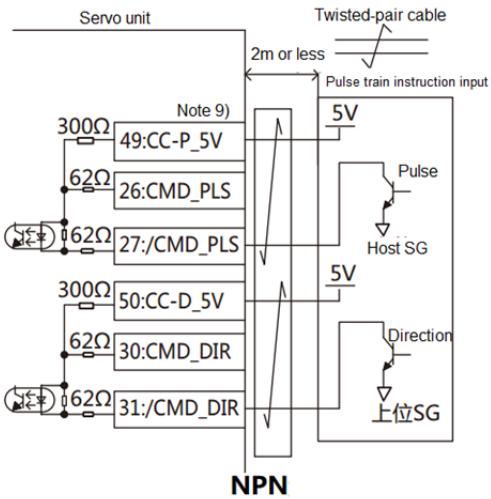

※ DI function can be flexibly configured by function codes. DI is valid by default when connected and the logic can be changed by function codes.

※ DO function can be flexibly configured by function codes. DO is valid by default when connected and the logic can be changed by function codes.

※ Parameter P06.41 is for the digital filtering of open-collector and general pulse input, P06.49 is for the digital filtering of high-speed pulse input.

4.7 Timing chart

4.7.1 Timing at power-on(Servo-ON signal accept timing at power-on)

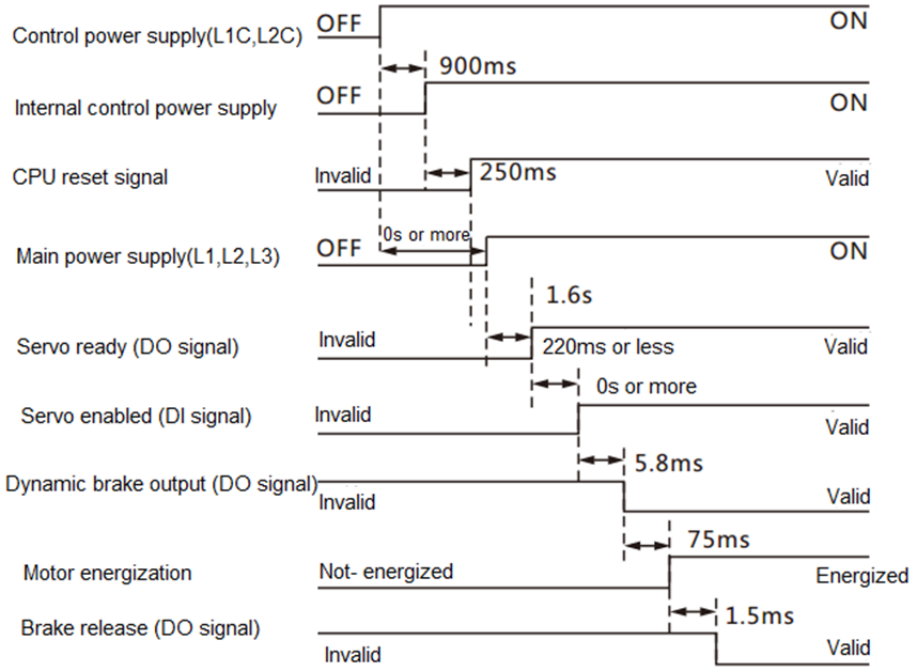

4.7.2 Servo-ON/OFF action when the motor is in motion

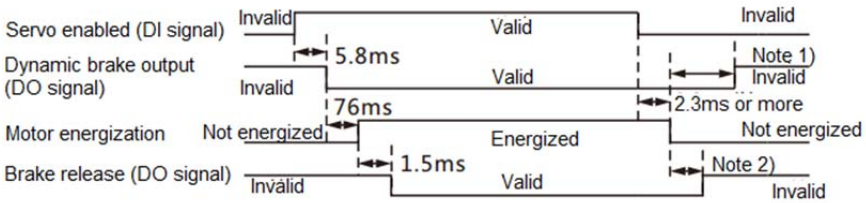

Note 1) When motor stops, the time sequence of dynamic brake output is related to the motor running speed. The greater the speed, the greater the time sequence. And the minimum value is 400us.

Note 2) When the motor stops, the time sequence of brake release is related to the settings of P04. 52 and P04. 53. And the minimum value is 2ms.

4.7.3 When an error(alarm) has occurred (at servo-ON command)

(1) Free run deceleration operation

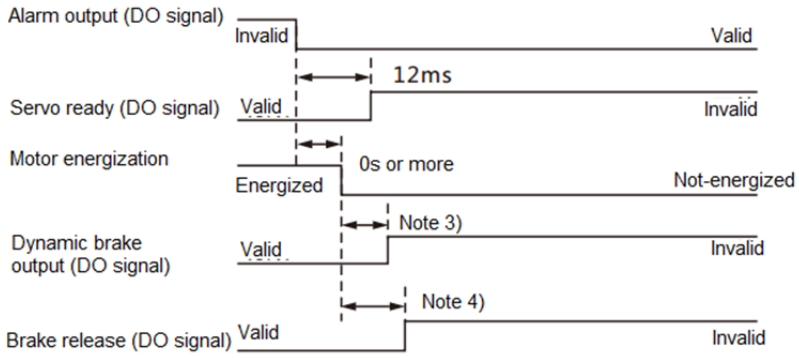

Note 3) When motor stops, the time sequence of dynamic brake output is related to the motor running speed. The greater the speed, the greater the time sequence. And the minimum value is 500us.

Note 4) When the motor stops, the time sequence of brake release is related to the settings of P04. 52 and P04. 53. And the minimum value is 2ms.

(2) Immediate stop operation

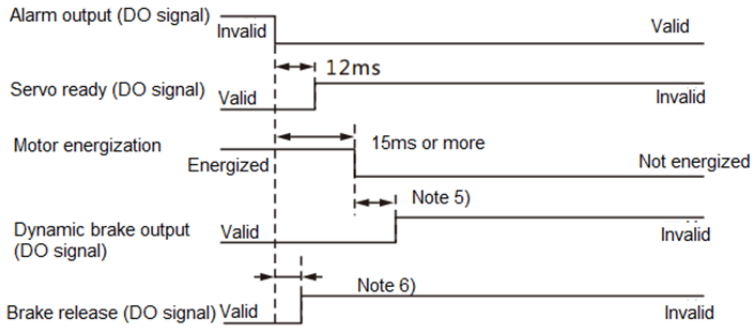

Note 5) When motor stops immediately, the time sequence of dynamic brake output is related to the motor running speed. The greater the speed, the greater the time sequence. And the minimum value is 500us.

Note 6) When the motor stops immediately, the time sequence of brake release is related to the motor running speed. At immediate stop, the speed feedback is smaller than the setting value(50rpm), “brake release output” becomes invalid. And the minimum value is 2ms.

4.7.4 When an alarm has been cleared(at servo-ON command)

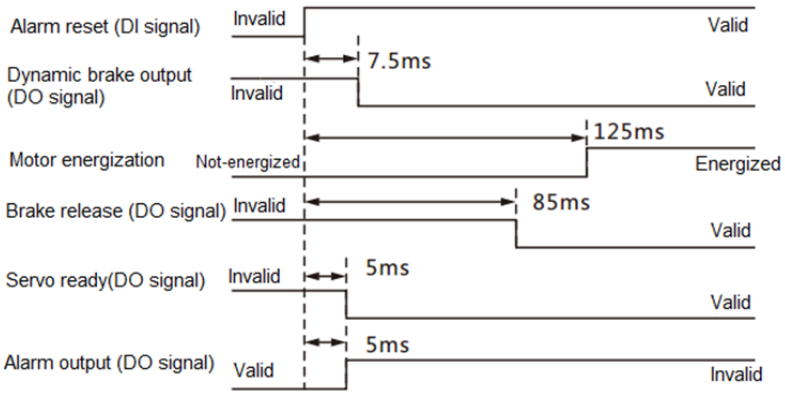

5. Operation panel and operations

5.1 Keys descriptions

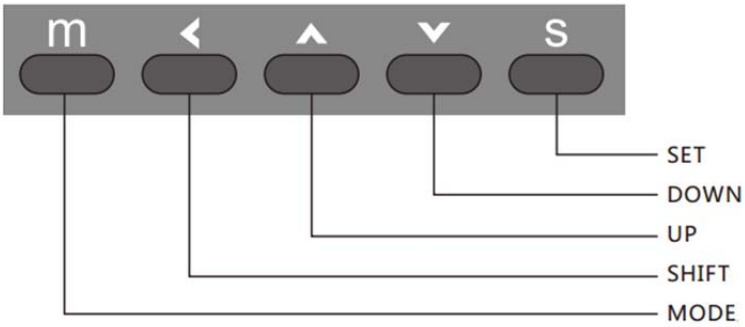

MODE button (m): switch level of parameters.

SET button (s): confirm the parameters modified.

UP button (^): increase value

DOWN button (v): decrease value

SHIFT button (s): shift to the data digit to be changed. For 32 bit, long-press SHIFT button to display higher digit. Long-press again to display sign bit. At the Level-0 panel, press SHIFT key to switch the monitoring parameters.

5.2 Display descriptions

The panel shows after power-on, indicating it is initializing, then to display Level-0 contents.

Level-0 panel display:

When in fault: The first row of Level-0 panel flashes to display the error or alarm code.

For example:

Error display: Alarm display: 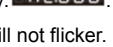 .

Here press the SET button, the panel will not flicker. Press the MODE button to enter the Level-1 panel.

The second row displays: ; the lower left corner indicates ;

No fault: When all the settings after initialization are normal, the panel displays ; the first row of Level-0 panel can monitor up to 12 state parameters. Up to 12 parameters can be displayed when the error or alarm occurs and up to 11 parameters when the drive is normal. When the error or alarm occurs, the first displayed is the error or alarm code, the second is operation state. When no error or alarm occurs, the first displayed is the operation state.

The other ten parameters can be set by P07,01 to P07.10. The setting value can be any value except 0 in Group P21. When set to 0, the corresponding position has no monitor parameters and press SHIFT button to skip it.

For example, when P07.01 is set to 1, it can monitor the parameter P21.01 (Motor speed feedback). These monitor parameters can be switched to display by pressing SHIFT button. If the monitor parameter is 32 bit, e.g. P21.17 (Feedback pulse counter), long-press the SHIFT button to switch over.

The second displays are shown below

When the first row displays parameters of P07.01 to P07.10, then 21-xx displays and xx is the setting value of P07.01 to

P07.10, e.g. 21-01;

In other cases, it displays HCFA; the lower left corner displays STAT.

The first row displays are shown below according to different control modes when running:

Pc run Position control mode

Sc run Speed control mode

tc run Torque control mode

Level-1 panel display:

The first row displays parameter group No., e.g. P00, and the rightmost digit flickers to be modified. When modifying other digits, press SHIFT button.

The second row displays HCFA;

The lower left corner displays MENU PARA.

Press SET button to enter Level-2 panel display.

Press MODE button to return to Level-0 panel display.

Level-2 panel display:

The parameter No. is shown below:

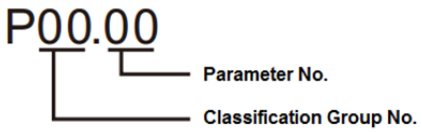

The first row displays parameter group No. and offset, e.g. P01.00, and the rightmost digit flickers to be modified. When modifying other digit, press SHIFT button to shift.

The second row displays the property of the parameters:

rw_u Indicates the parameters can be read and written and no sign;

rw_S Indicates the parameters can be read and written and with sign;

rw ru Indicates the parameters can be read and written and no sign; the parameter becomes valid after restarting;

rw rS Indicates the parameters can be read and written and with sign; the parameter becomes valid after restarting;

ro_u Indicates the read-only parameter and no sign;

ro_S Indicates the read-only parameter and with sign;

ro__ Indicates the reserved parameter and cannot be read or written.

The lower left corner displays MENU and PARA.

Press SET button to enter Level-3 panel display.

Press MODE button to return to Level-1 panel display.

Level-3 panel display:

Take P01.00 as the example and 01350 displays. The specific value is determined by the property of parameter value. If the parameter value can be modified, the rightmost bit will flicker. When modifying other digit, press SHIFT button to shift. If the parameter is 32 bit, long-press the SHIFT button to switch over.

The second row displays the group No. and offset. Take P01.00 as the example and display P01.00.

The lower left corner indicates MENU PARA.

After pressing the SET button, the displays are shown as follows:

The first row:

r.PowOn Displays and indicates the successful modification of parameters. The parameter becomes valid after restarting power. Or it always displays until press the MODE button.

wrt.End Displays and indicates the successful modification of parameters. The parameter becomes valid immediately (about 4ms). After this parameter displays about 1s, it returns to the Level-2 panel display automatically.

wrt.StP Displays and indicates the successful modification of parameters. This parameter becomes valid after servo stops or power restarts. After displaying for about 1s, it returns to the Level-2 panel display automatically.

rd.Only Indicates read-only parameter and cannot be modified. After displaying for about 1s, it returns to the Level-2 panel display automatically.

ro.Lock Indicates the parameter cannot be written due to the specified range. For example, when P00.02 is not set to 0, the group P01 cannot be written into.

Press MODE button to return to Level-2 panel display.

5.3 JOG running and parameter identification

5.3.1 Operation and display at JOG running

1) Before entering JOG interface

Go to P20.00, then press SET button to enter the JOG interface and it displays JOG speed setting value (value of P03.04). If all other parameters are factory default, below will be shown:

0200 Displays at the first row and the last digit flickers, indicating it can be modified. Press SHIFT button to shift to another digit and press UP/DOWN button to increase/ decrease the numerical value.

P20.00 Displays at the second row.

The lower left corner displays MENU / PARA.

2) After entering JOG interface

After entering JOG interface, press SET button to show:

0200 Displays at the first row and the digit will not flicker, indicating the digit cannot be modified. Now the JOG process starts.

JOG Displays at the second row.

The lower left corner displays MENU .

Hold and press UP button, the motor will do forward rotating at the speed displayed at the first-row. Hold and press DOWN button, the motor will do reverse rotating at the speed displayed at the first-row. When release UP/DOWN button, the motor will stop rotating. But this does not exit the JOG process. The drive is still in the speed control mode only the command is 0.

Press MODE button to exit the JOG process.

5.3.2 Inertia and encoder initial angle identification

1) Before entering the identification interface

Go to P20.03 and below will be shown:

0 displays at the first row and the last digit will flicker, indicating it can be modified. Modifying it to 1, the forward-rotation inertia identification will be performed. Modifying to 2, the reverse-rotation inertia identification will be

performed. Modifying to 5, the encoder initial angle identification will be performed. Other values are undefined.

P20.03 Displays at the second row.

The lower left corner displays MENU PARA.

2) After entering the identification interface

After entering the identification interface, when the parameter value at first-row is modified to 1 or 2, press SET button to start the inertia identification. The displays are shown below:

The first row displays 00.69, the value of load inertia ratio (P00.04).

The second row displays iTUNE, the inertia identification is being performed.

After the identification is completed, the inertia value will be displayed at the first row.

The second row displays iEnd, indicating the identification has been completed.

The lower left corner displays TUNE.

After identification has been completed, long-press SET button (about 2s or more), the inertia value identified just now can be stored into E2PROM. The actual process is, the inertia value identified has been recorded into P00.04 and then the value of P00.04 stored into E2PROM.

After entering the identification interface, modify the parameter value at first row to 5, then press SET button, the encoder initial angle identification starts. The first row displays the value of present electrical angle (P21. 09).

The second row displays AtUNE, indicating the initial angle identification is being performed.

After the identification is completed, the first row will display the value of present initial angle.

The second row displays AEnd, indicating the initial angle identification has been completed.

The lower left corner displays TUNE.

After the identification is completed, no storage is required. Long-press SET button (about 2s or more) has no effect.

Press MODE button to exit the identification process.

6. Control functions

6.1 Position control mode

Outline

Position control can be performed based on the position instruction (pulse train) from the upper controller or internal position control. This section describes the fundamental setup to be used for the position control.

Figure 6.1 Block diagram of position control function

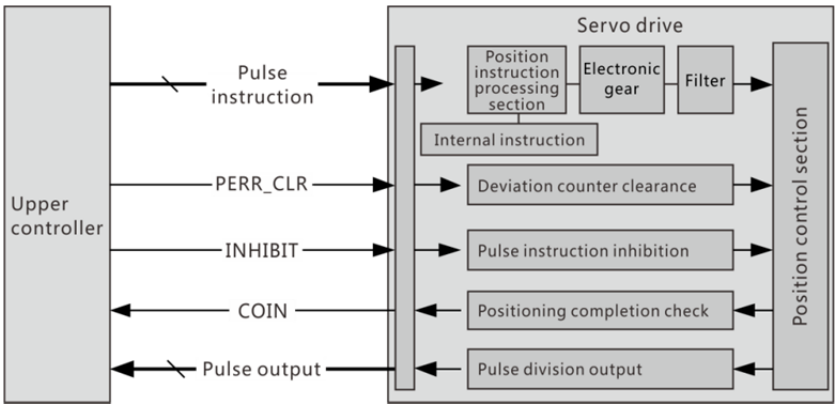

Function description

1. Position instruction processing section:

Position instruction processing section determines the command source, does command counting and specifies the command unit required by the present control mode in real-time. There are three position instruction sources (P00.05): 0-Pulse instruction; 1-step value; 2-internal position control. Pulse instruction has six forms (P00.07): 0-Direction + pulse, positive logic (Default); 1-Direction+ pulse, negative logic; 2- A-phase + B-phase, positive logic; 3- A-phase + B-phase, negative logic; 4-CW+CCW, positive logic; 5- CW+CCW, negative logic. .The user needs to set P00.05 and P00.07 based on the actual command from upper controller and determines the wiring mode by differential input or open-collector (OC) input based on the signal form from the upper controller.

When the command source is step value, set the step value in P00.26. The drive will have the interpolation at a very low speed to complete the specified position distance, which can be used for manual adjustment.

When command source is internal position control, set the 16 positions, speeds and acceleration/deceleration times. The drive will have the linear interpolation based on the set parameters to complete the specified position distance.

Relevant parameters:

P00	05	Position instruction source	0: Pulse instruction 1: Step value instruction 2: Internal position control 3: High-speed pulse instruction
P00	07	Pulse form	0: Direction + pulse, positive logic (Default) 1: Direction + pulse, negative logic

	27		2: A-phase + B-phase, positive logic 3: A-phase + B-phase, negative logic 4: CW+CCW, positive logic 5: CW+CCW, negative logic
P00	26	Step value setting	-9999~9999 command unit

For details of internal position control, please refer to the parameters of Group P08.

2. Electronic gear:

This function multiplies the input pulse instruction from the upper controller by the specified ratio and applies the result to the position control section as the final position control command per unit of encoder minimum resolution.

When P00.08 is not 0, Position control command = Encoder resolution * Input command / P00.08;

When P00.08 is 0, Position control command = Electronic gear ratio numerator * Input command / Electronic gear ratio denominator. The present electronic gear ratio can be selected by DI function of GEAR_SEL1 and GEAR_SEL2.

GEAR_SEL1 OFF, GEAR_SEL2 OFF→Electronic gear ratio 1

GEAR_SEL1 ON, GEAR_SEL2 OFF→Electronic gear ratio 2

GEAR_SEL1 OFF, GEAR_SEL2 ON→Electronic gear ratio 3

GEAR_SEL1ON, GEAR_SEL2 ON→Electronic gear ratio 4

Relevant parameters:

P00	08	Instruction units per motor one revolution(32-bit)	0 Unit/Turn ~1073741824 Unit/Turn
P00	10	Electronic gear numerator 1 (32-bit)	1~1073741824
P00	12	Electronic gear denominator (32-bit)	1~1073741824
P06	00	Electronic gear numerator 2(32-bit)	1~1073741824
P06	02	Electronic gear numerator 3(32-bit)	1~1073741824
P06	04	Electronic gear numerator 4(32-bit)	1~1073741824

Even though the setting range of electronic gear ratio numerator/ denominator is wide, when the ratio exceeds the setting range, the electronic gear setting fault Err.048 occurs. Therefore, the electronic gear ratio must satisfy the following range:

Encoder resolution / 10000000 ≤ Numerator / Denominator ≤ Encoder resolution / 2.5

3. Position instruction filter

To smooth the instruction calculated by the electronic gear ratio, the position instruction filter function must be used. There are two built-in position instruction filters: Low-pass smoothing filter (IIR) and FIR filter. The longer the filtering time, the better the filtering effect, but the response delay also becomes larger.

Relevant parameters:

P02	00	Position instruction smoothing filter	0ms~6553.5ms
P02	01	Position instruction FIR filter	0.0ms~128.0ms
P02	19	Position instruction FIR filter 2	0.0ms~128.0ms

4. Pulse frequency-division output function

The motor rotating position information can be sent to the upper controller in the form of AB-phase orthogonal pulse. Z-phase signal outputs once per motor revolution. Pulse output source, resolution, phase logic and Z-signal logic can be set by the function codes.

Relevant parameters:

P00	14	Pulse output counts per motor one revolution (32-bit)	16PPR ~ 1073741824PPR
P00	16	Pulse output positive direction definition	0-CCW 1-CW
P00	17	Pulse output OUT_Z polarity	0-Z pulse high level

			1-Z pulse low level 2-High accuracy Z pulse high level 3- High accuracy Z pulse low level
P00	18	Pulse output function selection	0- Encoder frequency-division output 1- Pulse instruction synchronous output 2-Pulse instruction interpolation output (gantry synchronization) 3-External encoder pulse synchronization output

5 Deviation clear function

This function is used to clear pulse deviation of internal position controller in any situation to avoid the accumulated position deviation.

Relevant parameters:

P06	06	Position deviation clearance function	0: Clear position deviation when servo is OFF and has error; 1: Clear position deviation only when servo has error; 2: Clear position deviation when servo is OFF and has error and PERR_CLR is valid; 3: Clear position deviation only by PERR_CLR

6. Input pulse inhibition function

This function is used to ignore the pulse input signal when necessary and the counting of position instruction input counter will be forced to stop. Only DI7, 8, 9 can be used.

Relevant parameters:

P06	42	Input pulse inhibition setting	0: 0.5ms twice continuously consistent; 1: 0.5ms three times continuously consistent; 2: 1ms three times continuously consistent; 3: 2ms three times continuously consistent. (Only DI7,8,9 can be selected)

7. Positioning completion detection function

If position deviation is within the setting range, servo can determine the positioning completion and position near and output digital signal COIN and NEAR based on the settings

Relevant parameters:

P04	47	Positioning completion (COIN) threshold	1P~65535P
P04	48	Positioning completion output setting	0: When position deviation absolute value is less than the setting value of P04.47, output COIN signal; 1: When position deviation absolute value is less than the setting value of P04.47 and position instruction is 0, output COIN signal; 2- When position deviation absolute value is less than the setting value of P04.47 and position instruction is 0, output COIN signal and holding time is the setting value of P04.49. 3: When position deviation absolute value is less than the setting value of P04.47 and position instruction is 0 after filtering, output COIN signal; 4: Condition 0 and zero-speed signal is valid, output COIN signal; 5: Condition 1 and zero-speed signal is valid, output COIN signal;

			6: Condition 2 and zero-speed signal is valid, output COIN signal; 7: Condition 3 and zero-speed signal is valid, output COIN signal.
P04	49	Positioning completion holding time	1~65535ms
P04	50	Positioning near (NEAR) threshold	1P~65535P

6.2 Speed control mode

Outline

You can control the speed according to the speed command (e.g. analog input) from the upper controller or the speed command set in the servo drive.

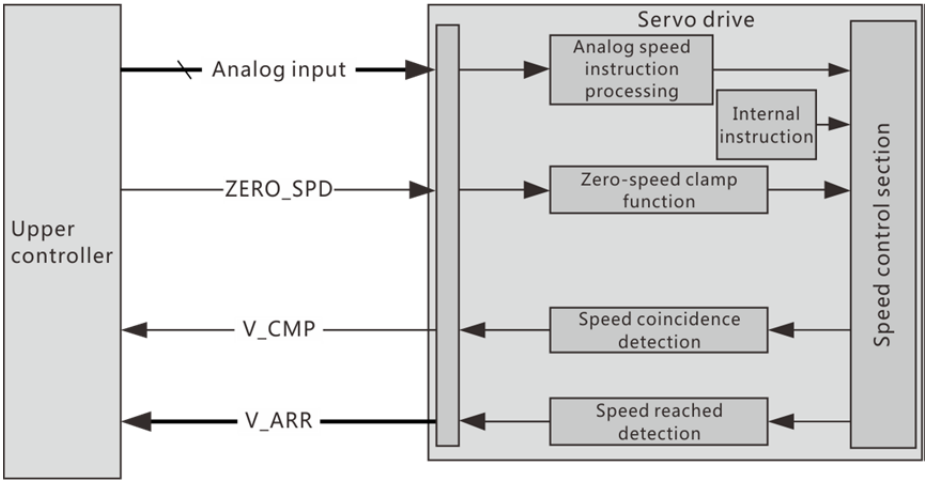

Figure 6.2 Block diagram of speed control mode

Function description

1. Analog speed command processing

The speed source is set in P03.00. When P03.00 is set to 1, set the analog input channel (default AI1) of SPR in P05.16 to 18 first. The analog speed command processing section performs the A/D conversion on analog voltage from the upper controller and convert the result to equivalent digital speed command. Meanwhile, user can set the digital filter to eliminate the noise.

When P03.00 is set to 0, set the digital speed command value in P03.03.

When P03.00 is set to 3, set the 16 multi-stage internal speed command value and acceleration/deceleration time in P03.31 to P03.51.

Relevant parameters:

P03	00	Speed instruction source	0: by P03.03 setting value; 1: SPR (default AI1); 2: SPR, multi-stage 2~16 switchover; 3: multi-stage 1~16 switchover; 4: communication setting; 5: SPR + digital setting; 6: multi-stage 1~16 switchover + digital setting.
P03	03	Speed instruction digital setting	-9000rpm~9000rpm
P05	00	AI1 minimum input	-10.00V~10.00V
P05	01	Corresponding value of AI1 minimum input	-100.0%~100.0% ((100% speed corresponds to P05.14 setting value, 100% torque corresponds to P05.15 setting value.)
P05	02	AI1 maximum input	-10.00V~10.00V
P05	03	Corresponding value of AI1 maximum input	-100.0%~100.0%
P05	04	AI1 zero offset	-500mV~500mV

P05	05	AI1 dead-zone setting	0. 0~20. 0%
P05	06	AI1 input filter time	0. 0ms~6553. 5ms
P05	07	AI2 minimum input	-10.00V~10.00V
P05	08	Corresponding value of AI2 minimum input	-100.0%~100.0%
P05	09	AI2 maximum input	-10.00V~10.00V
P05	10	Corresponding value of AI2 maximum input	-100.0%~100.0%
P05	11	AI2 zero offset	-500mV~500mV
P05	12	AI2 dead-zone setting	0.0~20.0%
P05	13	AI2 input filtering time	0. 0ms~6553. 5ms
P05	14	AI setting 100% speed	0~9000rpm
P05	15	AI setting 100% torque	0~5. 00*motor rated torque
P05	16	AI1 function selection	0: SPR, speed instruction; 1: TQR, torque instruction; 2: SPL, speed limit; 3: TLMTP, positive torque limit; 4: TLMTN, negative torque limit; 5: TFFD, torque feedforward.
P05	17	AI2 function selection	0: SPR, speed instruction; 1: TQR, torque instruction; 2: SPL, speed limit; 3: TLMTP, positive torque limit; 4: TLMTN, negative torque limit; 5: TFFD, torque feedforward.

2. Zero-speed clamp (ZERO_SPD) function

The speed command can be set to 0 forcibly by DI function ZERO_SPD. User can determine whether to switch over to position control mode by setting value of P03.19.

Relevant parameters:

P03	19	Zero-speed clamp function	0: Invalid 1: When ZERO_SPD is valid, the speed command is forced to be 0. 2: When ZERO_SPD is valid, the speed command is forced to be 0. When the actual speed of motor is less than the value of P03.20, servo will switch over to position control mode and lock.
P03	20	Zero-speed clamp threshold value	0rpm~1000rpm

3. Speed conformity (V_CMP) detection

The speed conformity V_CMP signal will output when the speed command before acceleration/deceleration and motor speed feedback is within the range specified by P04.44. There is 10rpm delay actually.

Relevant parameters:

P04	44	Speed conformity signal width	10rpm～1000rpm

4. Speed reached (V_ ARR) detection

The signal V_ARR will output when the actual speed reaches the speed specified. There is 10rpm delay actually.

Relevant parameters:

P04	45	Speed reached signal width	10rpm~9000rpm

5. Acceleration/deceleration setting function

There are two groups of acceleration/deceleration time. When internal multi-stage speed command is used, select the acceleration/deceleration time of Group 1 or Group 2. When the acceleration/deceleration time is set to 10ms, it indicates the time of acceleration from 0rpm to 1000rpm or deceleration from 1000rpm to 0rpm is 10ms.

Relevant parameters:

P03	14	Acceleration time 1	0ms~65535ms/1000rpm
P03	15	Deceleration time 1	0ms~65535ms/1000rpm
P03	16	Acceleration time 2	0ms~65535ms/1000rpm
P03	17	Deceleration time 2	0ms~65535ms/1000rpm

6.3 Torque control mode

Outline

The torque control is performed according to the torque command (analog or internal torque setting). For controlling the torque, the speed limit input is required in addition to the torque command to maintain the motor speed within the speed limit.

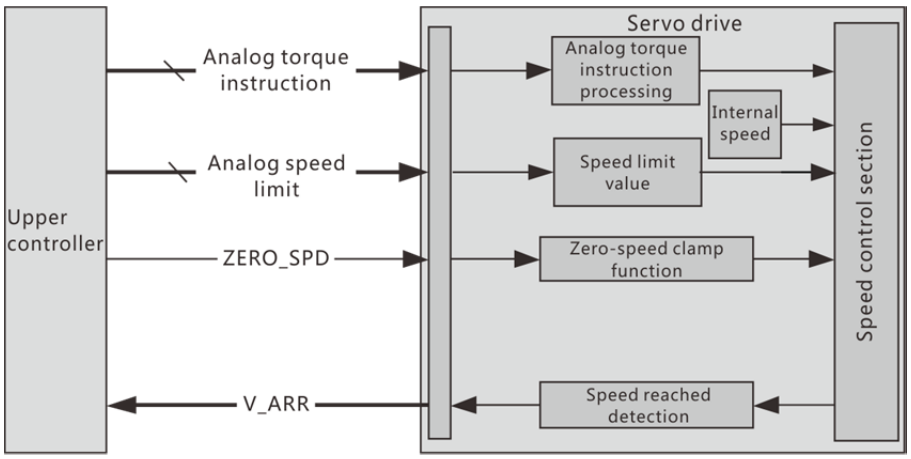

Figure 6.3 Block diagram of torque control mode

Function description

1. Analog torque command processing

The torque command source is set in P03.22. When P03.22 is set to 1, set the analog input channel of TQR in P05.16 to 18 first. The analog torque command processing section performs the A/D conversion on analog voltage from the upper controller and this signal is converted to equivalent digital torque command. Meanwhile, set the filter to eliminate the noise.

When P03.22 is set to 0, set the digital speed command value in P03.25.

When P03.22 is set to 2, the digital setting and analog setting can be switched over via DI function CMD_SEL.

Relevant parameters:

P03	22	Torque instruction source	0: Digital setting of P03.25; 1: TQR; 2: Digital setting, TQR switchover (CMD_SEL); 3: Communication setting; 4: TQR+ Digital setting.
P03	25	Torque instruction digital setting value	-300.0%~300.0% (relative to motor rated torque)

The relevant parameters for analog input are the same as speed control mode.

2. Speed limit function at torque control

In the torque control mode, the speed control circuit is disconnected, so the speed must be limited to prevent accidents. The speed limit function is to limit the motor rotation speed within a specified range. When the motor speed exceeds the speed limit value, the actual torque instruction is no longer equal to the torque command, but is equal to the output of the speed limit regulator. The speed limit value can be set by P03.27 and P03.28, or analog input SPL. The final speed limit must not exceed the maximum motor speed.

Relevant parameters:

P03	26	Speed limit source in torque control	0: Internal positive/negative speed limit P03.27 and P3.28 1: SPL
P03	27	Internal positive speed limit	0rpm~9000rpm
P03	28	Internal negative speed limit	0rpm~9000rpm

The relevant parameters for analog input is same as speed control mode.

6.4 Motion control functions

6.4.1 Internal position control

1. Description

In position control mode, you can give the commands by external pulse, also can select drive internal command. You can set the number of commands, operation speed and acceleration/deceleration time easily.

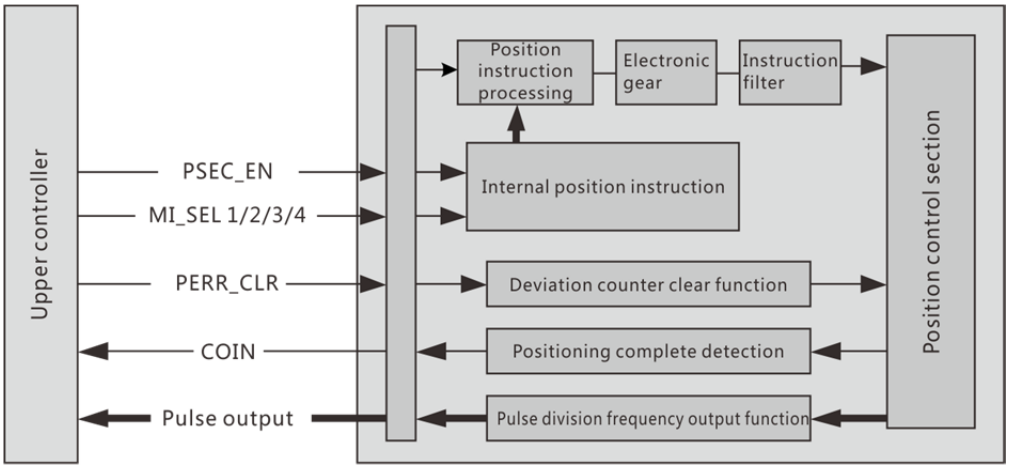

Figure 6-4 Block diagram of internal position control

The internal position control, like the external pulse instruction, is regulated by the electronic gear and position instruction filter and can receive the deviation counter clear signal. It can output positioning completion signal after positioning completed and can configure pulse division frequency output.

The unit of internal position control is the user command unit, not the unit of encoder inside the drive (min resolution of the encoder). So it is necessary to set the corresponding electronic gear ratio. For example, if the number of pulses per encoder one revolution is Penc and the number of pulses per one revolution user expecting is Puser, the electronic gear ratio should be: Penc/Puser.

Internal position control can set up to 16 multi-stage commands and different operation speed and acceleration/ deceleration time can be set for each stage. There is sequential operation pattern and random operation pattern that is to execute certain

stage position instructions sequentially or randomly. The relative or absolute instruction can be configured, that is the increment relative to the current position or absolute position relative to the origin point for each stage.

For sequential operation pattern, the start-stage number and end-stage number can be set, starting from the start-stage, ending at the end-stage. There are single operation and cycle operation to be selected. For the single operation, after the end-stage completes, the command stops. For the cycle operation, after the end-stage completes, the command starts from the start-stage and only stop until user stops the operation. Furthermore, you can set the waiting time between the stages.

For random operation pattern, you can select the state to be executed via DI terminal input signal or communication setting. When select stage number via DI terminal, up to 4 DI terminals can be selected and DI terminals 6, 7, 8, 9 can be configured. For details, refer to Table 6-1. The shaded cells in the table indicates that the corresponding DI terminal input signal is valid. The cells without shade indicates the corresponding input signal is invalid.

The operation process of internal position control is shown in Figure 6-6. Notes: When using the internal position control, after the servo ON, it is necessary to input internal multi-stage position signal (DI function 25) via DI to give the enable position instruction.

Table 6-1 Stage No. of internal multi- stage position DI switchover (the DI input in valid at the shaded area)

Stage No.	1	2	3	4	5	6	7	8	9	10	11	12	13	14	15	16
DI function 6																
DI function 7																
DI function 8																
DI function 9																

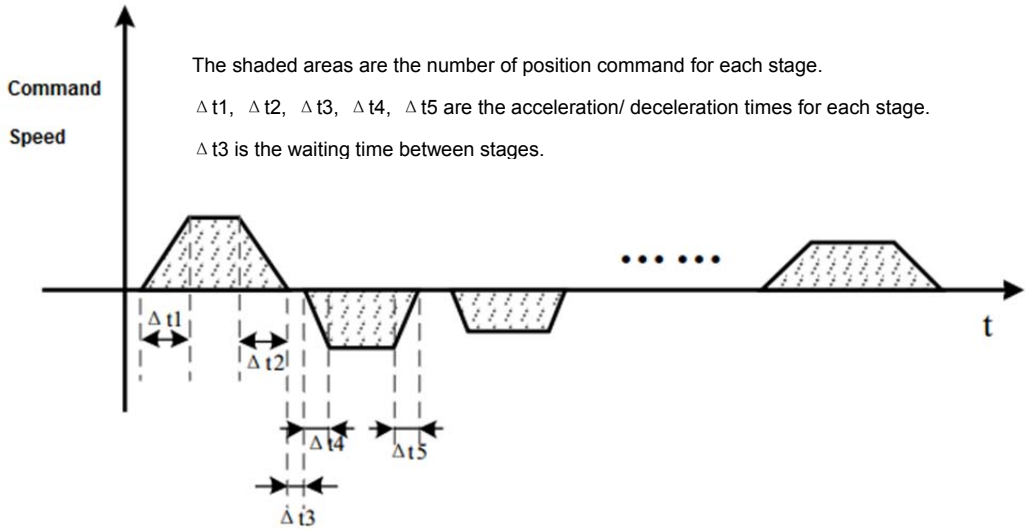

Figure 6-5 internal position control operation diagram

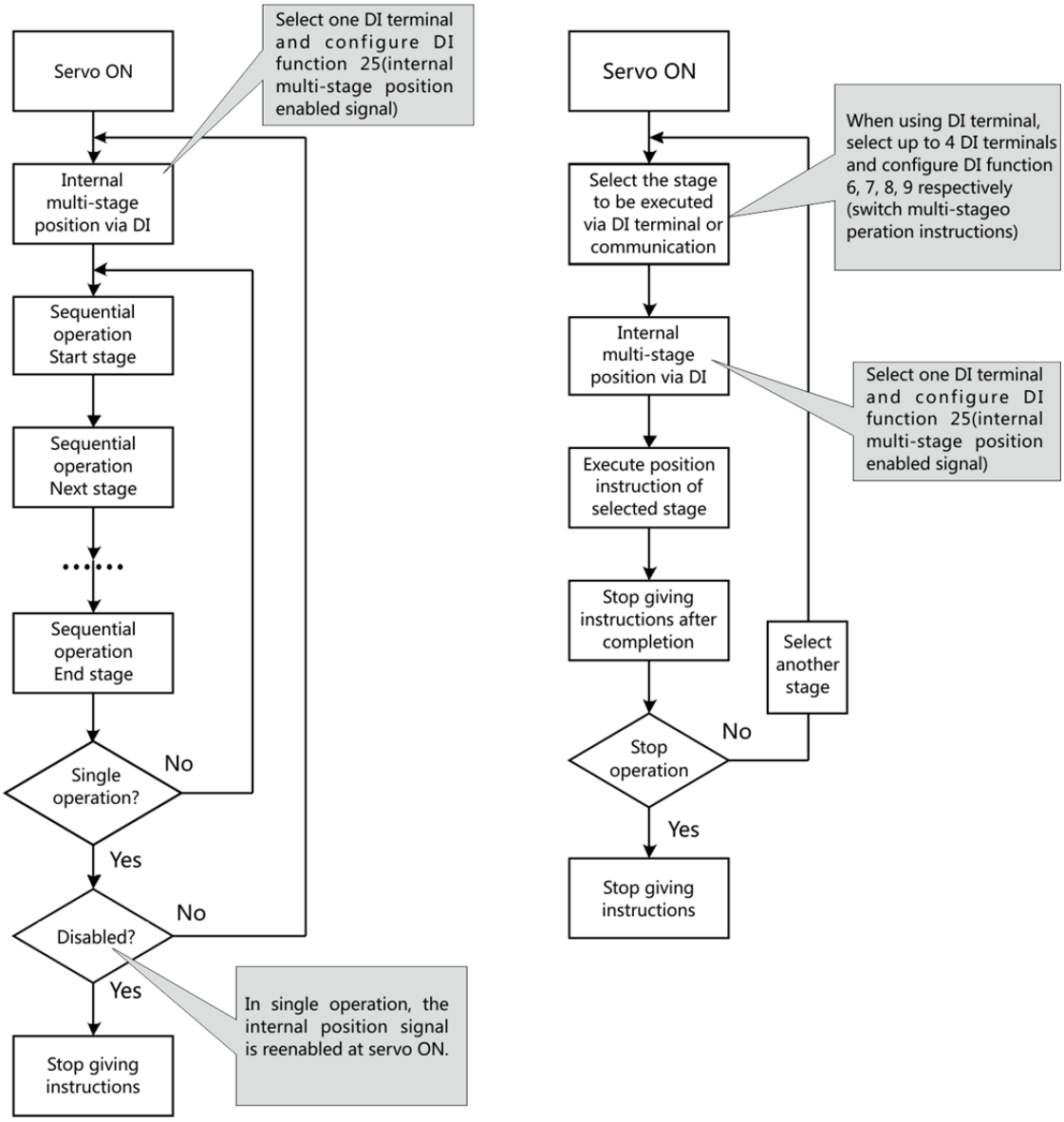

Figure 6-6 Operation process of internal multi-stage position instruction (Sequential operation is on the left-side and random operation on the right-side)

2. Parameters

Set the following parameters when using internal position control. For details, refer to Table 6-2 and 6-3.

Table 6-2 Parameters for internal multi-stage position instructions

P08.00	Internal position execution pattern selection	0: Single operation 1: Cycle operation 2: DI terminal switchover operation 3: Communication switchover operation 4: Single continuous operation 5: Cycle continuous operation
P08.01	Starting stage number	The value of P08. 01 should be less than P08. 02. When P08.01 cannot be greater, change the P08.02 to the maximum expected value, and then modify P08. 01.
P08.02	Ending stage number	The value of P08.02 should be greater than P08.01.

P08.03	Restarting pattern of residual stages after pausing	0: Finish the residual stages 1: Operate from the start stage again
P08.04	Position instruction type selection	0: Relative position instruction 1: Absolute position instruction
P08.05	Unit for waiting time	0: ms 1: s
P08.06	Internal position control 1st stage length (32-bit)	Unit: user command unit.
P08.08	Internal position control 1st stage max speed	Unit: RPM
P08.09	Internal position control 1st stage acceleration/deceleration time	Unit: ms
P08.10	Waiting time after internal position control 1st stage completed	The unit is decided by P08. 05.

The parameters of P08.06 to P08.10 are the number of position instruction pulse, operation speed, acceleration/deceleration time and waiting time after completion for the 1st stage. The other stages are similar to the 1st stage.

Table 6-3 DI DO function of internal position control

DI function 25	Internal multi-stage position instruction enabling signal, must be configured.
DI function 6	Switch 16 stages command and must be configured when P08. 00 is set to 2.
DI function 7	DI function 6, 7, 8 and 9 are respectively composed of 4-bit binary Bit0 to Bit3. The binary is 1 when DI function is valid; the binary is 0 when DI function is invalid. Correspondingly, 4-bit binary 0000~1111 corresponds to 1st stage to 16th stage respectively.
DI function 8	
DI function 9	

6.4.2 Interrupt positioning

Outline:

Interrupt positioning is also a type of internal position control. In position control mode, you can interrupt the position instruction that is being executed (external pulse instruction or internal position control) at any time and execute the position instruction specified by user. For details, refer to Figure 6-7.

The thin line in the following figure represents the position instruction that is being executing. Interrupt positioning triggers when reached t1. The bold line represents the execution of interrupt positioning command. The shaded area is the position instruction length of interrupt positioning.

△t1, △t 2, △t3, △t4 are the acceleration/deceleration time of interrupt positioning.

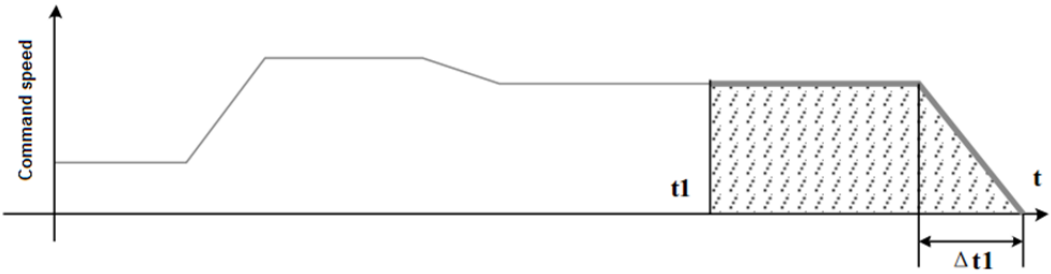

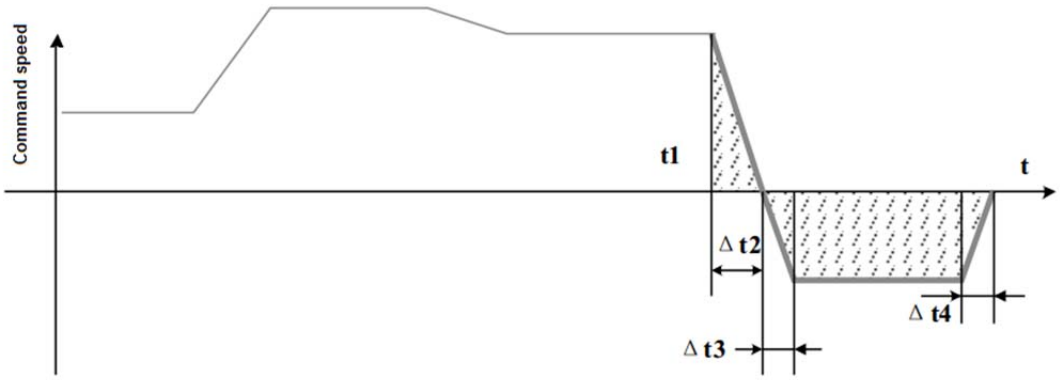

Figure 6-7 Operation of interrupt positioning command

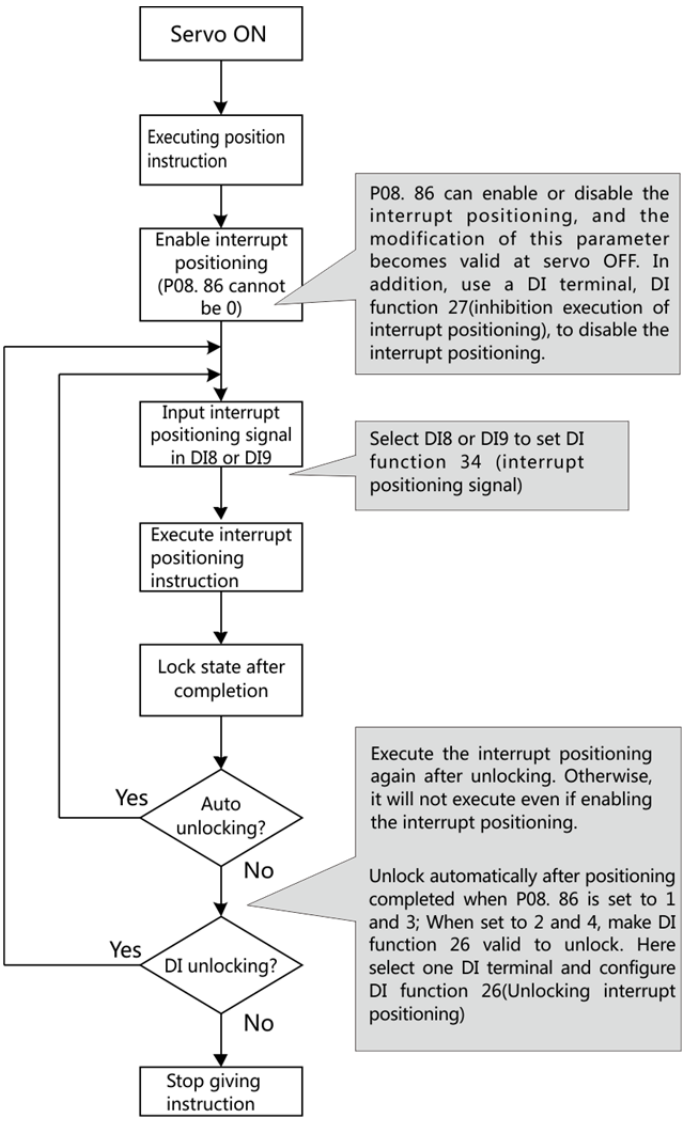

Figure 6-8 Operation of interrupt positioning

Set the following parameters and DI terminal when using interrupt positioning. If necessary, there are two DO function outputs that can be used to monitor the process of the interrupt positioning. For the parameters of position instruction counts and acceleration/ deceleration of interrupt positioning, 16th stage command of internal position control, refer to Table 6-4 and 6-5.

For the operation process, refer to Figure 6-8.

Table 6-4 Parameters of interrupt positioning

P08.81	Internal position control 16th stage length (32-bit)	Unit: User defines. Set the command length of interrupt positioning.
P08.83	Internal position control 16th stage max speed	Unit; RPM, Set the operation speed at interrupt positioning.
P08.84	Internal position control 16th stage acceleration/deceleration time	Unit: ms. Set the acceleration/deceleration time of interrupt positioning.
P08.86	Interrupt positioning setting	0: Disable interrupt positioning function; 1: Enable, interrupt at DI signal rising edge and release the interrupt automatically after completion. 2: Enable, interrupt at DI signal rising edge and release the interrupt via DI signal INTP_ULK (DI function 26). 3: Enable, interrupt at DI signal falling edge and release the interrupt automatically after completion. 4: Enable, interrupt at DI signal falling edge and release the interrupt via DI signal INTP_ULK (DI function 26).
P04.08	DI 8 function setting	The trigger signal for interrupt positioning can only be enabled via DI 8 or DI 9
P04.09	DI 9 function setting	The trigger signal for interrupt positioning can only be enabled via DI 8 or DI 9

Table 6-5 DI DO function of interrupt positioning

DI function 34	Enable interrupt positioning and must be configured to DI8 or DI9
DI function 26	Unlock interrupt positioning. When P08. 86 is set to 2 or 4, it can be configured to any DI terminal.
DI function 27	Prohibit interrupt positioning at any time, optional, can be configured to any DI terminal.
DO function 15	Valid when interrupt positioning complete, optional, can be configured to any DO terminal.
DO function 18	Valid when executing interrupt positioning, optional, can be configured to any DO terminal.

Description for interruption positioning operation direction:

1) Set the 2nd digit of P07.16 from the right to 0: Follow the current operation direction

Current operation direction	Interruption position instruction increment	Interruption operation direction at running
Positive	Negative	Negative
Positive	Positive	Positive
Negative	Positive	Negative
Negative	Negative	Positive

2) Set the 2nd digit of P07.16 from the right to 1: Determined by the sign of the command value

Current operation direction	Interruption position instruction increment	Interruption operation direction at running
Positive	Negative	Negative
Positive	Positive	Positive
Negative	Positive	Negative
Negative	Negative	Positive

When position instruction is 0, the interruption operation direction is same as the interruption position instruction increment direction.

6.4.3 Homing operation

1. Description

The servo drive has built-in homing function and supports multiple homing types. Homing can be realized independently and can also be achieved with upper controllers.

Take the limit position as the origin point, please refer to Figure 6-9. Based on the actual needs, you can choose whether to find Z-phase signal, which can help realize different ways of homing.

For the situation with origin point sensor, refer to Figure 6-10. Here are some selections: The positive search and negative search at the start position will make the difference; For the home position sensor signal, using the rising edge or the falling edge will also lead to a different home position; In addition, you should set whether to use the Z-phase pulse signal, and the direction of the Z-phase pulse signal search (After finding home position sensor signal, finding Z-phase pulse signal forward or backward will also lead to a different home position).

When using Z-phase pulses, different directions to find Z-phase pulses will find different home position. For details, refer to Figure 6-11.

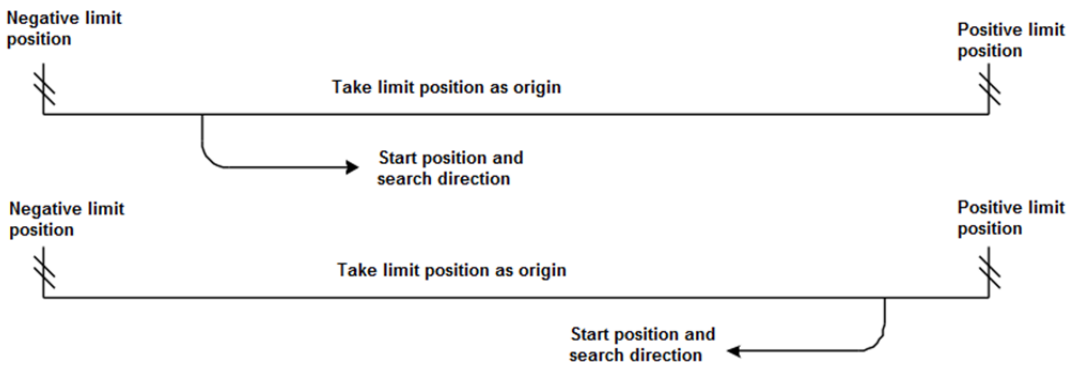

Figure 6-9 Take limit position as origin

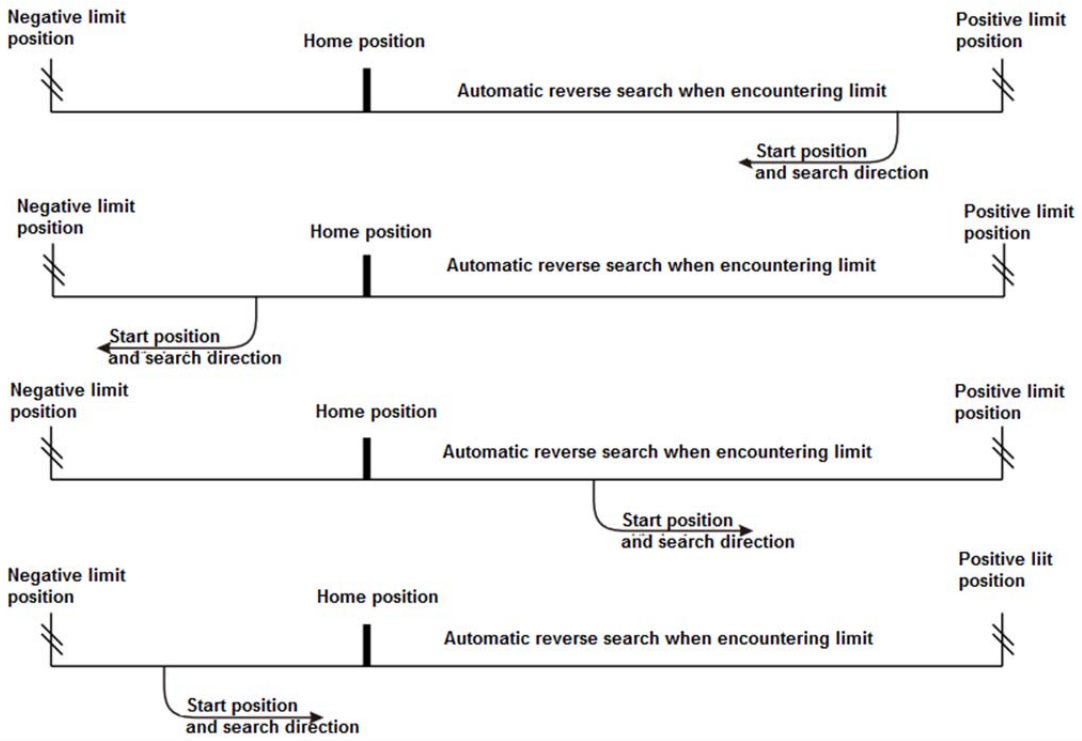

Figure 6-10 With home position sensor

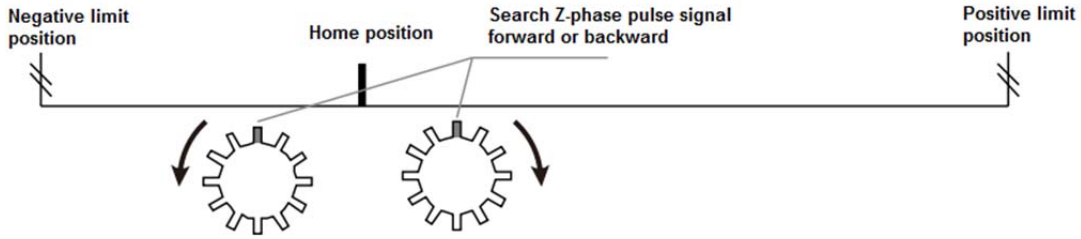

Figure 6-11 Search Z-phase pulse signal forward or backward

2. Parameters

Table 6-6 related parameters for home position return

P08.88	Homing start modes	0: OFF 1: Start by STHOME via DI function 2: Start by operation panel 3: Start by communication 4: Immediate start at first servo ON
P08.89	Homing modes	0: Forward origin search, take positive limit as origin 1: Backward origin search, take negative limit as origin 2: Forward origin search, take HOME_I N signal OFF→ON as origin 3: Backward origin search, take HOME_I N signal OFF→ON as origin 4: Forward origin search, take HOME_I N signal ON→OFF as origin 5: Backward origin search, take HOME_I N signal ON→OFF as origin 6: Forward, find the nearest Z-phase signal as origin 7: Backward, find the nearest Z-phase signal as origin 8: Take the present position as origin
P08.90	Limit switch and Z-phase signal setting at homing	0: Reverse to find Z-phase signal after contacting limit switch; 1: Forward to find Z-phase signal after contacting limit switch; 2: Not find Z-phase signal after contacting limit switch; 3: Stop & output alarm after contacting limit switch, reverse to find Z-phase signal 4: Stop & output alarm after contacting limit switch, forward to find Z-phase signal 5: Stop & output alarm after contacting limit switch, not to find Z-phase signal Note: For contacting limit switch, if the homing modes is set to 0 to 1, no alarm or stop even though this parameter is set to 3, 4 or 5. If homing modes is set to 0 to 1, find Z-phase signal after contacting limit switch; If homing modes is set to 2 to 5, find Z-phase signal after contacting HOME_IN signal.
P08.92	Origin search high speed	Start with this speed when homing starts
P08.93	Origin search low speed	Switch to low speed after contacting origin point or deceleration point
P08.94	Acceleration/deceleration time at origin search	Set the acceleration/deceleration time at the start/ stop of origin search. Unit: ms.
P08.95	Homing time limit	Limit the longest time of homing. If origin point is still not found after the time set in P08.95, AL.96 occurs and operation stops.
P08.96	Origin point coordinate offset	The absolute position counter will be cleared after finding the origin point or set the absolute position counter to the value of this parameter.
P08.98	Mechanical origin point	System can move further in the distance set in this parameter after origin point is

	offset	found.

Table 6-7 Related DI DO functions at home position return

DI function 29	Homing start, must be set and can be configured to any DI terminal
DI function 28	Origin point signal, when P08.89= 2, 3, 4, 5, must be set and can be configured to any DI terminal
DI function 33	Deceleration point sensor signal, optional, but it is not necessary in most occasions.
DO function 17	Homing completion signal and can be configured to any DO terminal.

7. Parameters

7.1 List of parameters

Control modes:

P: position control

S: speed control

T: torque control

● means applicable

- means not applicable

Parameter number		Description	Control mode		
			P	S	T
P00 Group Basic Parameters	00	Motor positive direction definition	●	●	●
	01	Control mode selection	●	●	●
	02	Real time auto-tuning	●	●	●
	03	Stiffness grade setting	●	●	●
	04	Load inertia ratio	●	●	●
	05	Position instruction source	●	●	●
	07	Pulse train form	●	-	-
	08	Instruction units per motor one revolution (32-bit)	●	-	-
	10	Electronic gear numerator 1 (32-bit)	●	-	-
	12	Electronic gear denominator (32-bit)	●	-	-
	14	Pulse output counts per motor one revolution (32-bit)	●	-	-
	16	Pulse output positive direction definition	●	●	●
	17	Pulse output OUT_Z polarity	●	-	-
	18	Pulse output function selection	●	-	-
	19	Position deviation too large threshold	●	●	●
	21	Regenerative resistor setting	●	●	●
	22	External regenerative resistor capacity	●	●	●

	23	External regenerative resistor resistance value	●	●	●
	24	External regenerative resistor heating time constant	●	●	●
	25	Regenerative voltage threshold	●	●	●
	26	Step value setting	●	-	-
	27	High pulse train form	●	-	-

Parameter number		Description	Control mode		
			P	S	T
P01 Group Gain Tuning Parameters	00	Position loop gain 1	●	-	-
	01	Speed loop gain 1	●	●	-
	02	Speed loop integral time 1	●	●	-
	03	Speed detection filter 1	●	●	●
	04	Torque instruction filter 1	●	●	●
	05	Position loop gain 2	●	-	-
	06	Speed loop gain 2	●	●	-
	07	Speed loop integral time 2	●	●	-
	08	Speed detection filter 2	●	●	●
	09	Torque instruction filter 2	●	●	●
	10	Speed regulator PDFF coefficient	●	●	-
	11	Speed feedforward control selection	●	-	-
	12	Speed feedforward gain	●	-	-
	13	Speed feedforward filtering time	●	-	-
	14	Torque feedforward control selection	●	●	-
	15	Torque feedforward gain	●	●	-
	16	Torque feedforward filtering time	●	●	-
	17	Digital input GAIN_SEL function selection	●	●	-
	18	Position control gain switchover mode	●	–	-
	19	Position control gain switchover delay	●	–	-
	20	Position control gain switchover class	●	–	-
	21	Position control gain switchover hysteresis	●	–	-
	22	Position control gain switchover time	●	–	-
	23	Speed control gain switchover mode	–	●	-
	24	Speed control gain switchover delay	–	●	-
	25	Speed control gain switchover class	–	●	-
	26	Speed control gain switchover hysteresis	–	●	-
	27	Torque control gain switchover mode	–	–	●
	28	Torque control gain switchover delay	–	–	●
	29	Torque control gain switchover class	–	–	●
	30	Torque control gain switchover hysteresis	–	–	●
	31	Observer enable	●	●	●
	32	Observer cutoff frequency	●	●	●

	33	Observer phase compensation time	●	●	●
	34	Observer inertia coefficient	●	●	●

Parameter number		Description	Control mode		
			P	S	T
P02 Group Vibration Suppression Parameters	00	Position instruction smoothing filter	●	-	-
	01	Position instruction FIR filter	●	-	-
	02	Adaptive filtering mode	●	●	●
	03	Adaptive filtering loads	●	●	●
	04	First notch filter frequency (manual)	●	●	●
	05	First notch filter width	●	●	●
	06	First notch filter depth	●	●	●
	07	Second notch filter frequency (manual)	●	●	●
	08	Second notch filter width	●	●	●
	09	Second notch filter depth	●	●	●
	10	Third notch filter frequency	●	●	●
	11	Third notch filter width	●	●	●
	12	Third notch filter depth	●	●	●
	13	Fourth notch filter frequency	●	●	●
	14	Fourth notch filter width	●	●	●
	15	Fourth notch filter depth	●	●	●
	19	Position instruction FIR filter 2	●	-	-
	20	First vibration attenuation frequency	●	●	-
	21	First vibration attenuation filter setting	●	●	-
	22	Second vibration attenuation frequency	●	●	-
	23	Second vibration attenuation filter setting	●	●	-
	31	Resonance point 1 frequency	●	●	●
	32	Resonance point 1 bandwidth	●	●	●
	33	Resonance point 1 amplitude	●	●	●
	34	Resonance point 2 frequency	●	●	●
	35	Resonance point 2 bandwidth	●	●	●
	36	Resonance point 2 amplitude	●	●	●

Parameter number		Description	Control mode		
			P	S	T
P03 Group Speed & Torque Control Parameters	00	Speed instruction source selection	-	●	-
	03	Speed instruction digital setting	-	●	-
	04	JOG speed setting	-	●	-
	08	Torque limit source	●	●	–
	09	Internal forward torque limit	●	●	–

	10	Internal reverse torque limit	●	●	–
	11	External forward torque limit	●	●	–
	12	External reverse torque limit	●	●	–
	14	Acceleration time 1	-	●	●
	15	Deceleration time 1	-	●	●
	16	Acceleration time 2	-	●	-
	17	Deceleration time 2	-	●	-
	19	Zero-speed clamp function	-	●	●
	20	Zero-speed clamp threshold value	-	●	●
	22	Torque instruction source	-	-	●
	25	Torque instruction digital setting value	-	-	●
	26	Speed limit source in torque control	-	-	●
	27	Internal positive speed limit	-	-	●
	28	Internal negative speed limit	-	-	●
	29	Hard limit torque limit	●	-	–
	30	Hard limit torque limit detection time	●	-	–
	31	Internal speed instruction segment number selection mode	-	●	-
	32	Acceleration time selection for internal speed segment 1-8	-	●	-
	33	Deceleration time selection for internal speed segment 1-8	-	●	-
	34	Acceleration time selection for internal speed segment 9-16	-	●	-
	35	Deceleration time selection for internal speed segment 9-16	-	●	-
	36	Segment 1 speed	-	●	-
	37	Segment 2 speed	-	●	-
	38	Segment 3 speed	-	●	-
	39	Segment 4 speed	-	●	-
	40	Segment 5 speed	-	●	-
	41	Segment 6 speed	-	●	-
	42	Segment 7 speed	-	●	-
	43	Segment 8 speed	-	●	-
	44	Segment 9 speed	-	●	-
	45	Segment 10 speed	-	●	-
	46	Segment 11 speed	-	●	-
	47	Segment 12 speed	-	●	-
	48	Segment 13 speed	-	●	-
	49	Segment 14 speed	-	●	-
	50	Segment 15 speed	-	●	-
	51	Segment 16 speed	-	●	-

Parameter number		Description	Control mode		
			P	S	T
Input/ output	00	Normal DI filter selection	●	●	●
	01	DI1 terminal function selection	●	●	●

	02	DI2 terminal function selection	●	●	●
	03	DI3 terminal function selection	●	●	●
	04	DI4 terminal function selection	●	●	●
	05	DI5 terminal function selection	●	●	●
	06	DI6 terminal function selection	●	●	●
	07	DI7 terminal function selection	●	●	●
	08	DI8 terminal function selection	●	●	●
	09	DI9 terminal function selection	●	●	●
	11	DI1 terminal logic selection	●	●	●
	12	DI2 terminal logic selection	●	●	●
	13	DI3 terminal logic selection	●	●	●
	14	DI4 terminal logic selection	●	●	●
	15	DI5 terminal logic selection	●	●	●
	16	DI6 terminal logic selection	●	●	●
	17	DI7 terminal logic selection	●	●	●
	18	DI8 terminal logic selection	●	●	●
	19	DI9 terminal logic selection	●	●	●
	21	DO1 terminal function selection	●	●	●
	22	DO2 terminal function selection	●	●	●
	23	DO3 terminal function selection	●	●	●
	24	DO4 terminal function selection	●	●	●
	25	DO5 terminal function selection	●	●	●
	26	DO6 terminal function selection	●	●	●
	27	DO7 terminal function selection	●	●	●
	28	DO8 terminal function selection	●	●	●
	29	DO9 terminal function selection	●	●	●
	31	DO1 terminal logic selection	●	●	●
	32	DO2 terminal logic selection	●	●	●
	33	DO3 terminal logic selection	●	●	●
	34	DO4 terminal logic selection	●	●	●
	35	DO5 terminal logic selection	●	●	●
	36	DO6 terminal logic selection	●	●	●
	37	DO7 terminal logic selection	●	●	●
	38	DO8 terminal logic selection	●	●	●
	39	DO9 terminal logic selection	●	●	●
	41	FUNINL signal unassigned state (Hex)	●	●	●
	42	FUNINH signal unassigned state (Hex)	●	●	●
	43	Motor rotational signal (TGON) threshold	●	●	●
	44	Speed conformity signal (V_CMP) width	–	●	–
	45	Speed reached signal (V_ARR) width	●	●	●
	47	Positioning completion (COIN) threshold	●	-	-
	48	Positioning completion output setting	●	-	-

	49	Positioning completion holding time	●	-	-
	50	Positioning near (NEAR) threshold	●	-	-
	51	Servo OFF delay time after holding brake taking action when speed is 0	●	●	●
	52	Speed setting for holding brake to take action in motion	●	●	●
	53	Waiting time for holding brake to take action in motion	●	●	●
	54	Special output function setting	●	●	●
	55	Torque reached (T_ARR) threshold	●	●	●
	56	Torque reached signal width	●	●	●
	57	Z-phase pulse width adjustment	●	●	●
	58	Zero-speed output threshold	●	●	●

Parameter number		Description	Control mode		
			P	S	T
P05 Group Analog Input/output Parameters	00	AI1 minimum input	●	●	●
	01	Corresponding value of AI1 minimum input	●	●	●
	02	AI1 maximum input	●	●	●
	03	Corresponding value of AI1 maximum input	●	●	●
	04	AI1 zero offset	●	●	●
	05	AI1 dead-zone setting	●	●	●
	06	AI1 input filtering time	●	●	●
	07	AI2 minimum input	●	●	●
	08	Corresponding value of AI2 minimum input	●	●	●
	09	AI2 maximum input	●	●	●
	10	Corresponding value of AI2 maximum input	●	●	●
	11	AI2 zero offset	●	●	●
	12	AI2 dead-zone setting	●	●	●
	13	AI2 input filtering time	●	●	●
	14	AI setting 100% speed	●	●	●
	15	AI setting 100% torque	●	●	●
	16	AI1 function selection	●	●	●
	17	AI2 function selection	●	●	●
	28	AO1 signal selection (need optional card)	●	●	●
	29	AO1 voltage offset	●	●	●
	30	AO1 multiplier	●	●	●
	31	AO2 signal selection (need optional card)	●	●	●
	32	AO2 voltage offset	●	●	●
	33	AO2 multiplier	●	●	●
	34	AO monitoring value types	●	●	●

Parameter number	Description	Control mode		
		P	S	T

P06 Group Expansion Parameters	00	Electronic gear numerator 2(32-bit)	●	–	–
	02	Electronic gear numerator 3(32-bit)	●	–	–
	04	Electronic gear numerator 4(32-bit)	●	–	–
	06	Position deviation clearance function	●	–	–
	09	Electronic gear ratio switchover delay	●	–	–
	10	Potential energy load torque compensation	●	●	–
	11	P06.10 memory selections	●	●	–
	19	Parameter identification rate	●	●	–
	20	Parameter identification acceleration time	●	●	–
	21	Parameter identification deceleration time	●	●	–
	22	Parameter identification mode selection	●	●	–
	23	Initial angle identification current limit	●	●	●
	24	Instantaneous power failure protection	●	●	●
	25	Instantaneous power failure deceleration time	●	●	●
	26	Servo OFF stop mode selection	●	●	●
	27	Second category fault stop mode selection	●	●	●
	28	Over-travel input setting	●	●	●
	29	Over-travel stop mode selection	●	●	●
	30	Input power phase loss protection	●	●	●
	31	Output power phase loss protection	●	●	●
	32	Emergency stop torque	●	●	●
	33	Tripping protection function	●	●	●
	34	Overload warning value	●	●	●
	35	Motor overload protection coefficient	●	●	●
	36	Undervoltage protection point	●	●	●
	37	Over-speed error point	●	●	●
	38	Maximum input pulse frequency	●	–	–
	39	Short circuit to ground detection protection selection	●	●	●
	40	Encoder interference detection delay	●	●	●
	41	Input pulse filtering setting	●	–	–
	42	Input pulse inhibition setting	●	–	–
	43	Deviation clearance input setting	●	–	–
	44	High speed DI filtering setting	●	●	●
	45	Speed deviation too large threshold	●	●	–
	46	Torque saturation overtime setting	●	●	●
	47	Absolute system setting	●	●	●
	48	Encoder battery undervoltage threshold	●	●	●
	49	High pulse input filter	●	●	●

Parameter number		Description	Control mode		
			P	S	T
y f u	00	Panel display selection	●	●	●

	01	Panel monitoring parameter setting 1	●	●	●
	02	Panel monitoring parameter setting 2	●	●	●
	03	Panel monitoring parameter setting 3	●	●	●
	04	Panel monitoring parameter setting 4	●	●	●
	05	Panel monitoring parameter setting 5	●	●	●
	08	Function selection 1	●	●	●
	09	Function selection 2	●	●	●
	10	User password	●	●	●
	11	Instant power failure immediate memory function	●	●	●
	12	User password screen-lock time	●	●	●
	14	Fast deceleration time	●	●	●
	16	Function selection 3	●	●	●
	17	Maximum division number pre motor one revolution	●	–	–
	19	Function selection 5	●	●	●
	20	Function selection 6	●	●	●
	21	Function selection 7	●	●	●
	22	Function selection 8	●	●	●
	23	Alarm reset time	●	●	●
	24	Positive soft-limit(32-bit)	●	●	●
	26	Negative soft-limit(32-bit)	●	●	●

Parameter number		Description	Control mode		
			P	S	T
P08 Group Internal Position Control Parameters	00	Internal position execution pattern selection	●	–	–
	01	Starting stage number	●	–	–
	02	Ending stage number	●	–	–
	03	Restarting pattern of residual stags after pausing	●	–	–
	04	Position instruction type selection	●	–	–
	05	Unit for waiting time	●	–	–
	06	Internal position control 1st stage length (32-bit)	●	–	–
	08	Internal position control 1st stage max speed	●	–	–
	09	Internal position control 1st stage acceleration/deceleration time	●	–	–
	10	Waiting time after internal position control 1st stage completed	●	–	–
	11	Internal position control 2nd stage length (32-bit)	●	–	–
	13	Internal position control 2nd stage max speed	●	–	–
	14	Internal position control 2nd stage acceleration/deceleration time	●	–	–
	15	Waiting time after internal position control 2nd stage completed	●	–	–
	16	Internal position control 2nd stage length (32-bit)	●	–	–
	18	Internal position control 3rd stage max speed	●	–	–
	19	Internal position control 3rd stage acceleration/deceleration time	●	–	–
	20	Waiting time after internal position control 3rd stage completed	●	–	–
	21	Internal position control 4th stage length (32-bit)	●	–	–

	23	Internal position control 4th stage max speed	●	–	–
	24	Internal position control 4th stage acceleration/deceleration time	●	–	–
	25	Waiting time after internal position control 4th stage completed	●	–	–
	26	Internal position control 5th stage length (32-bit)	●	–	–
	28	Internal position control 5th stage max speed	●	–	–
	29	Internal position control 5th stage acceleration/deceleration time	●	–	–
	30	Waiting time after internal position control 5th stage completed	●	–	–
	31	Internal position control 6th stage length (32-bit)	●	–	–
	33	Internal position control 6th stage max speed	●	–	–
	34	Internal position control 6th stage acceleration/deceleration time	●	–	–
	35	Waiting time after internal position control 6th stage completed	●	–	–
	36	Internal position control 7th stage length (32-bit)	●	–	–
	38	Internal position control 7th stage max speed	●	–	–
	39	Internal position control 7th stage acceleration/deceleration time	●	–	–
	40	Waiting time after internal position control 7th stage completed	●	–	–
	41	Internal position control 8th stage length (32-bit)	●	–	–
	43	Internal position control 8th stage max speed	●	–	–
	44	Internal position control 8th stage acceleration/deceleration time	●	–	–
	45	Waiting time after internal position control 8th stage completed	●	–	–
	46	Internal position control 9th stage length (32-bit)	●	–	–
	48	Internal position control 9th stage max speed	●	–	–
	49	Internal position control 9th stage acceleration/deceleration time	●	–	–
	50	Waiting time after internal position control 9th stage completed	●	–	–
	51	Internal position control 10th stage length (32-bit)	●	–	–
	53	Internal position control 10th stage max speed	●	–	–
	54	Internal position control 10th stage acceleration/deceleration time	●	–	–
	55	Waiting time after internal position control 10th stage completed	●	–	–
	56	Internal position control 11th stage length (32-bit)	●	–	–
	58	Internal position control 11th stage max speed	●	–	–
	59	Internal position control 11th stage acceleration/deceleration time	●	–	–
	60	Waiting time after internal position control 11th stage completed	●	–	–
	61	Internal position control 12th stage length (32-bit)	●	–	–
	63	Internal position control 12th stage max speed	●	–	–
	64	Internal position control 12th stage acceleration/deceleration time	●	–	–
	65	Waiting time after internal position control 12th stage completed	●	–	–
	66	Internal position control 13th stage length (32-bit)	●	–	–
	68	Internal position control 13th stage max speed	●	–	–
	69	Internal position control 13th stage acceleration/deceleration time	●	–	–
	70	Waiting time after internal position control 13th stage completed	●	–	–
	71	Internal position control 14th stage length (32-bit)	●	–	–
	73	Internal position control 14th stage max speed	●	–	–
	74	Internal position control 14th stage acceleration/deceleration time	●	–	–

	75	Waiting time after internal position control 14th stage completed	●	–	–
	76	Internal position control 15th stage length (32-bit)	●	–	–
	78	Internal position control 15th stage max speed	●	–	–
	79	Internal position control 15th stage acceleration/deceleration time	●	–	–
	80	Waiting time after internal position control 15th stage completed	●	–	–
	81	Internal position control 16th stage length (32-bit)	●	–	–
	83	Internal position control 16th stage max speed	●	–	–
	84	Internal position control 16th stage acceleration/deceleration time	●	–	–
	85	Waiting time after internal position control 16th stage completed	●	–	–
	86	Interrupt positioning setting	●	–	–
	88	Homing start modes	●	–	–
	89	Homing modes	●	–	–
	90	Limit switch and Z-phase signal setting at homing	●	–	–
	92	Origin search high speed	●	–	–
	93	Origin search low speed	●	–	–
	94	Acceleration/deceleration time at origin search	●	–	–
	95	Homing time limit	●	–	–
	96	Origin point coordinate offset (32-bit)	●	–	–
	98	Mechanical origin point offset (32-bit)	●	–	–

Parameter number		Description	Control mode		
			P	S	T
P09 Group Communication Setting Parameters	00	Modbus axis address	●	●	●
	01	Modbus baud rate	●	●	●
	02	Modbus data format	●	●	●
	03	Communication overtime	●	●	●
	04	Communication response delay	●	●	●
	05	Communication DI enabling setting 1	●	●	●
	06	Communication DI enabling setting 2	●	●	●
	07	Communication DI enabling setting 3	●	●	●
	08	Communication DI enabling setting 4	●	●	●
	09	Communication DO enabling setting 1	●	●	●
	10	Communication DO enabling setting 2	●	●	●
	11	Communication instruction holding time	●	●	●
	12	Enable AO function or CAN communication	●	●	●
	13	CAN communication configuration 1	●	●	●
	14	CAN communication configuration 2	●	●	●
	15	CAN communication configuration 3	●	●	●

Parameter number	Description	Control mode		
		P	S	T

P17 Group Expansion position control function	00	External encoder using method	●	–	–
	01	External encoder pitch(32-bit)	●	–	–
	03	Full-closed hybrid deviation threshold(32-bit)	●	–	–
	05	Hybrid deviation counting setting	●	–	–
	06	Hybrid vibration suppression gain	●	–	–
	07	Hybrid vibration suppression time constant	●	–	–
	09	Full-closed hybrid deviation external unit(32-bit)	●	–	–
	11	Internal encoder counting external unit(32-bit)	●	–	–
	13	External encoder counting value(32-bit)	●	–	–
	16	Position comparison output mode	●	–	–
	17	First position(32-bit)	●	–	–
	19	2nd position(32-bit)	●	–	–
	21	3rd position(32-bit)	●	–	–
	23	4th position(32-bit)	●	–	–
	25	Effective time 1	●	–	–
	26	Effective time 2	●	–	–
	27	Effective time 3	●	–	–
	28	Effective time 4	●	–	–
	29	Display delay	●	–	–

Parameter number		Description	Control mode		
			P	S	T
P18 Group Motor Parameters	00	Motor model code	●	●	●

Parameter number		Description	Control mode		
			P	S	T
P20 Group Panel and Communication Interface Parameters	00	Panel JOG	●	●	●
	01	Fault reset	●	●	●
	03	Parameter identification function	●	●	●
	05	Analog input automatic offset adjustment	●	●	●
	06	System initialization function	●	●	●
	08	Communication operation instruction input	●	●	●
	09	Communication operation status output	●	●	●
	10	Communication setting DI input	●	●	●
	11	Multi-stage operation selection by communication	●	●	-
	12	Homing start by communication	●	–	-

Parameter number		Description	Control mode		
			P	S	T
P21 Group Monitoring Parameters	00	Servo status	●	●	●
	01	Motor speed feedback	●	●	●
	03	Speed instruction	●	●	●
	04	Internal torque instruction (relative to rated torque)	●	●	●
	05	Phase current effective value	●	●	●
	06	DC bus voltage	●	●	●
	07	Absolute position counter (32-bit)	●	●	●
	09	Electrical angle	●	●	●
	10	Mechanical angle (relative to encoder zero point)	●	●	●
	11	Load inertia identification value	●	●	●
	12	Speed value relative to input instruction	●	●	●
	13	Position deviation counter (32-bit)	●	●	●
	15	Input pulse counter (32-bit)	●	●	●
	17	Feedback pulse counter (32-bit)	●	●	●
	19	Position instruction deviation counter unit (32-bit)	●	●	●
	21	Digital input signal monitoring	●	●	●
	23	Digital output signal monitoring	●	●	●
	25	Total power-on time	●	●	●
	27	AI 1 voltage after adjustment	●	●	●
	28	AI 2 voltage after adjustment	●	●	●
	29	AI 1 voltage before adjustment	●	●	●
	30	AI 2 voltage before adjustment	●	●	●
	31	Module temperature	●	●	●
	32	Number of turns of absolute encoder (32-bit)	●	●	●
	34	Single turn position of absolute encoder (32-bit)	●	●	●
	36	Version code 1	●	●	●
	37	Version code 2	●	●	●
	38	Version code 3	●	●	●
	39	Product series code	●	●	●
	40	Fault record display	●	●	●
	41	Fault code	●	●	●
	42	Time stamp upon selected fault (32-bit)	●	●	●
	44	Motor speed upon selected fault	●	●	●
	45	U-phase current upon selected fault	●	●	●
	46	V-phase current upon selected fault	●	●	●
	47	DC bus voltage upon selected fault	●	●	●
	48	Input terminal status upon selected fault	●	●	●
	49	Output terminal status upon selected fault	●	●	●
	51	Accumulative load ratio	●	●	●
	52	Regenerative load ratio	●	●	●

	53	Internal warning code	●	●	●
	54	Internal instruction present stage code	●	●	●
	55	Customized serial code	●	●	●
	56	High 32 place of absolute position counter (32-bit)	●	●	●
	58	High 32 place of feedback pulse counter (32-bit)	●	●	●

7.2 Parameter descriptions

- **P00 Group Basic Parameters**

P00.00	Motor positive direction definition	Range	Default	Unit	Effective	Control Mode		
		0~1	0	-	Restart	P	S	T

This parameter is to set the relation between instruction direction and motor rotational direction:

0: When the instruction is positive, motor rotational direction is CCW (counterclockwise from facing the motor shaft)

1: When the instruction is positive, motor rotational direction is CW (clockwise from facing the motor shaft)

P00.01	Control mode selection	Range	Default	Unit	Effective	Control Mode		
		0~7	0	-	Restart	P	S	T

0: Position control mode;

1: Speed control mode;

2: Torque control mode;

3: Position/Speed control gain switchover;

4: Position/Torque control gain switchover;

5: Speed/Torque control gain switchover;

6: Fully closed-loop control mode(reserved)

7:CANOpen mode

When selecting 3~5, use MODE_SEL of DI to switchover. When MODE_SEL is 0 the control mode is the 1st mode; when 1, the2nd one. When using CANOpen or Ether CAT communication, the control mode is the 7th one.

P00.02	Real time auto-tuning	Range	Default	Unit	Effective	Control Mode		
		0~3	1	-	Immediate	P	S	T

0: Real time auto-tuning is invalid;

1: Standard auto-tuning without gain switchover;

2: Positioning mode with gain switchover, suitable for position control;

3: Load characteristics dynamic detection,

P00.03	Stiffness grade setting	Range	Default	Unit	Effective	Control Mode		
		0~31	12	-	Immediate	P	S	T

Set the response while the real-time auto-tuning is valid.

The parameter becomes valid when P00. 02=1 or 2; Invalid when P00. 02=0.

When P00. 02=1, stiffness grade can be changed.

When P00. 02=2, gain switchover is enabled and P01. 18 automatically changes to 10.

The larger this parameters is, the wider the servo control circuit bandwidth is, and the faster response is but this can also cause larger vibrations. Please adjust this parameter from low to high gradually when the instruction is 0.

P00.04	Load inertia ratio	Range	Default	Unit	Effective	Control Mode		
		0~6000	100	0.01	Immediate	P	S	T

This is the ratio of load inertia to motor rotor inertia.

P00.05	Position instruction source	Range	Default	Unit	Effective	Control Mode		
		0~3	0	-	Restart	P	S	T

0: Pulse instruction

1: Step value instruction

2: Internal position control

3: High-speed pulse instruction (including PG models), can receive the external high-speed pulse instruction

P00.07	Pulse train form	Range	Default	Unit	Effective	Control Mode		
		0~5	0	-	Restart	P		

0: Direction + pulse, positive logic (Default)

1: Direction + pulse, negative logic

2: A-phase + B-phase, positive logic

3: A-phase + B-phase, negative logic

4: CW+CCW, positive logic

5: CW+CCW, negative logic

P00.08	Instruction units per motor one revolution (32-bit)	Range	Default	Unit	Effective	Control Mode		
		0~1073741824	10000	1Unit	Restart	P		

This is to set the instruction units (number of pulses) needed for motor one revolution.

0: this parameter is invalid and user needs to set electronic gear ratio;

Other values: this parameter is valid and user no need to set electronic gear ratio.

P00.10	Electronic gear numerator 1 (32-bit)	Range	Default	Unit	Effective	Control Mode		
		0~1073741824	0	-	Immediate	P		

The condition of this parameter to be functional: P00.08=0.

P00.12	Electronic gear denominator (32-bit)	Range	Default	Unit	Effective	Control Mode		
		1~1073741824	10000	-	Immediate	P		

The condition of this parameter to be functional: P00.08=0.

P00.14	Output pulse counts per motor one revolution (32-bit)	Range	Default	Unit	Effective	Control Mode		
		16~1073741824	2500	1PPR	Restart	P		

The number of OUTA or OUTB per motor one revolution.

P00.16	Pulse output positive direction definition	Range	Default	Unit	Effective	Control Mode		
		0~1	0	-	Restart	P	S	T

0: CCW. When motor rotational direction is CCW, OUTA is before OUTB;

1: CW. When motor rotational direction is CW, OUTA is before OUTB.

P00.17	Pulse output OUT_Z polarity	Range	Default	Unit	Effective	Control Mode		
		0~1	0	-	Restart	P		

0: OUT_Z is high electric level;

1: OUT_Z is low electric level.

2: High accuracy, OUT_Z is high electric level;

3: High accuracy, OUT_Z is low electric level

P00.18	Pulse output function selection	Range	Default	Unit	Effective	Control Mode		
		0~1	0	-	Restart	P		

0: Encoder frequency division output;

1: Pulse instruction synchronous output.

2: Pulse instruction interpolation output(gantry synchronization)

3: External encoder pulse synchronization output

P00.19	Position deviation too large threshold(32-bit)	Range	Default	Unit	Effective	Control Mode		
		1~1073741824	1000000	1P	Immediate	P	S	T

When position deviation exceeds the value of this parameter, Err.043 will output.

P00.21	Regenerative resistor setting	Range	Default	Unit	Effective	Control Mode

		0~1	0	-	Immediate	P	S	T

0: Use internal regenerative resistor (100s)

1: Use external regenerative resistor and natural cooling (150s) or forced air cooling (200s)

P00.22	External regenerative resistor capacity	Range	Default	Unit	Effective	Control Mode		
		1~65535	100	1W	Immediate	P	S	T

P00.23	External regenerative resistor resistance value	Range	Default	Unit	Effective	Control Mode		
		1~1000	100	1Ω	Immediate	P	S	T

P00.24	External regenerative resistor heating time constant	Range	Default	Unit	Effective	Control Mode		
		1~30000	2000	0.1s	Immediate	P	S	T

P00.25	Regenerative voltage threshold	Range	Default	Unit	Effective	Control Mode		
		0~65535	400	-	Immediate	P	S	T

P00.26	Step value setting	Range	Default	Unit	Effective	Control Mode		
		-9999~9999	50	-	Immediate	P		

P00.27	High-speed pulse train form	Range	Default	Unit	Effective	Control Mode		
		0~5	0	-	Restart	P		

0: Direction + pulse, positive logic (Default)

1: Direction + pulse, negative logic

2: Phase-A (Pulse) +Phase-B(sign) orthogonal pulse, 4 multiplication, positive logic

3: Phase-A +Phase-B orthogonal pulse, 4 multiplication, negative logic

4: CW+CCW，positive logic

5: CW+CCW，negative logic

- **P01 Group Gain Tuning Parameters**

P01.00	Position loop gain 1	Range	Default	Unit	Effective	Control Mode		
		10~20000	400	0.1/s	Immediate	P		

The larger this parameters is, the faster position loop response is but this can also cause larger vibrations.

P01.01	Speed loop gain 1	Range	Default	Unit	Effective	Control Mode		
		10~20000	200	0.1Hz	Immediate	P	S	

The larger this parameters is, the faster speed loop response is but this can also cause larger vibrations.

P01.02	Speed loop integral time 1	Range	Default	Unit	Effective	Control Mode		
		15~51200	3000	0.01ms	Immediate	P	S	

The smaller this parameters is, the smaller steady-state deviation is. If set this parameter to 51200, it becomes invalid.

P01.03	Speed detection filter 1	Range	Default	Unit	Effective	Control Mode		
		0~15	0	-	Immediate	P	S	T

The larger this value is, the better vibration suppression effect is; but this will reduce response bandwidth.

P01.04	Torque instruction filter 1	Range	Default	Unit	Effective	Control Mode		
		0~10000	100	0.01ms	Immediate	P	S	T

This parameter is to set first order low-pass filtering time constant of torque instruction and can suppress resonances caused by mechanical twisting.

P01.05	Position loop gain 2	Range	Default	Unit	Effective	Control Mode		
		10~20000	400	0.1/s	Immediate	P		

The larger this parameters is, the faster position loop response is but this can also cause larger vibrations.

P01.06	Speed loop gain 2	Range	Default	Unit	Effective	Control Mode		
		10~20000	200	0.1Hz	Immediate	P	S	

The larger this parameters is, the faster speed loop response is but this can also cause larger vibrations.

P01.07	Speed loop integral time 2	Range	Default	Unit	Effective	Control Mode		
		15~51200	3000	0.01ms	Immediate	P	S	

The smaller this parameters is, the smaller steady-state deviation is. If set this parameter to 51200, it becomes invalid.

P01.08	Speed detection filter 2	Range	Default	Unit	Effective	Control Mode		
		0~15	0	-	Immediate	P	S	T

The larger this value is, the better vibration suppression effect is; but this will reduce response bandwidth.

P01.09	Torque instruction filter 2	Range	Default	Unit	Effective	Control Mode		
		0~10000	100	0.01ms	Immediate	P	S	T

This parameter is to set first order low-pass filtering time constant of torque instruction and can suppress resonances caused by mechanical twisting.

P01.10	Speed regulator PDFF coefficient	Range	Default	Unit	Effective	Control Mode		
		0~1000	1000	0.1%	Immediate	P	S	

100.0%: PI regulator;

0.0%: PDFF regulator

Medium value: can reduce overshoot but will also reduce speed loop response.

P01.11	Speed feedforward control selection	Range	Default	Unit	Effective	Control Mode		
		0~1	0	-	Restart	P		

0: no speed feedforward

1: internal speed feedforward

P01.12	Speed feedforward gain	Range	Default	Unit	Effective	Control Mode		
		0~1500	300	0.1%	Immediate	P		

This parameter is to set speed feedforward gain in position control mode and can help reduce position deviations in certain speeds.

P01.13	Speed feedforward filtering time	Range	Default	Unit	Effective	Control Mode		
		0~6400	50	0.01ms	Immediate	P		

This parameter is to set speed feedforward filtering time in position control mode.

P01.14	Torque feedforward control selection	Range	Default	Unit	Effective	Control Mode		
		0~2	0	-	Restart	P	S	

0: No torque feedforward

1: Internal torque feedforward

2: Use TFFD as torque feedforward input

P01.15	Torque feedforward gain	Range	Default	Unit	Effective	Control Mode		
		0~1000	0	0.1%	Immediate	P	S	

This parameter can help reduce position deviation during acceleration/deceleration.

P01.16	Torque feedforward filtering time	Range	Default	Unit	Effective	Control Mode

		0~6400	0	0.01ms	Immediate	P	S	

P01.17	Digital input GAIN_SEL function selection	Range	Default	Unit	Effective	Control Mode		
		0~1	0	-	Immediate	P	S	

0: Speed loop regulator P/PI switchover (Group 1 gains applicable)

1: Group 1/Group 2 gains switchover

P01.18	Position control gain switchover mode	Range	Default	Unit	Effective	Control Mode		
		0~10	0	-	Immediate	P		

0: Group 1 gains (fixed): P01.00~P01.04;

1: Group 2 gains (fixed): P01.05~P01.09;

2: Use GAIN_SEL signal to switch between Group 1 and Group 2 gains; or use speed regulator for P/PI switchover;

3: When torque instruction exceeds settings of P01.20 & P01.21, switch to Group 2; otherwise Group 1 after the time set in P01.19. Unit: 0.1%;

4: not applicable to position control mode or fully-closed loop mode;

5: When speed instruction exceeds settings of P01.20 & P01.21, switch to Group 2; otherwise Group 1 after the time set in P01.19. Unit: 1RPM;

6: When position deviation exceeds settings of P01.20 & P01.21, switch to Group 2; otherwise Group 1 after the time set in P01.19. Unit: 1 encoder resolution;

7: When position instruction is not 0, switch to Group 2; when position instruction maintains 0 after the time set in P01.19, switch to Group 1;

8: When positioning is not completed, switch to Group 2; when positioning is completed after the time set in P01.19, switch to Group 1;

9: When speed feedback exceeds settings of P01.20 & P01.21, switch to Group 2; otherwise Group 1 after the time set in P01.19;

10: When position instruction is not 0, switch to Group 2; when position instruction maintains 0 and speed feedback is lower than P01.20 after the time set in P01.19, switch to Group 1.

P01.19	Position control gain switchover delay	Range	Default	Unit	Effective	Control Mode		
		0~1000	50	0.1ms	Immediate	P		

P01.20	Position control gain switchover grade	Range	Default	Unit	Effective	Control Mode		
		0~20000	50	-	Immediate	P		

P01.21	Position control gain switchover hysteresis	Range	Default	Unit	Effective	Control Mode		
		0~20000	33	-	Immediate	P		

P01.22	Position control gain switchover time	Range	Default	Unit	Effective	Control Mode		
		0~1000	33	0.1ms	Immediate	P		

P01.23	Speed control gain switchover mode	Range	Default	Unit	Effective	Control Mode		
		0~5	0	-	Immediate		S	

0: Group 1 gains (fixed): P01.00~P01.04;

1: Group 2 gains (fixed): P01.05~P01.09;

2: Use GAIN_SEL signal to switch between Group 1 and Group 2 gains; or use speed regulator for P/PI switchover;

3: When torque instruction exceeds settings of P01.25 & P01.26, switch to Group 2; otherwise Group 1 after the time set in P01.24, unit 0.1%;

4: When speed instruction variation exceeds settings of P01.25 & P01.26, switch to Group 2; otherwise Group 1 after the time set in P01.24, unit 10rpm;

5: When speed instruction exceeds settings of P01.25 & P01.26, switch to Group 2; otherwise Group 1 after the time set in P01.24, unit 1rpm

P01.24	Speed control gain switchover delay	Range	Default	Unit	Effective	Control Mode		
		0~1000	0	0.1ms	Immediate		S	

P01.25	Speed control gain switchover grade	Range	Default	Unit	Effective	Control Mode		
		0~20000	0	-	Immediate		S	

P01.26	Speed control gain switchover hysteresis	Range	Default	Unit	Effective	Control Mode		
		0~20000	0	-	Immediate		S	

P01.27	Torque control gain switchover mode	Range	Default	Unit	Effective	Control Mode		
		0~3	0	-	Immediate			T

0: Group 1 gains (fixed): P01.00~P01.04;

1: Group 2 gains (fixed): P01.05~P01.09;

2: Use GAIN_SEL signal to switch between Group 1 and Group 2 gains; or use speed regulator for P/PI switchover;

3: When torque instruction exceeds settings of P01.29 & P01.30, switch to Group 2; otherwise Group 1 after the time set in P01.28, unit 0.1%;

P01.28	Torque control gain switchover delay	Range	Default	Unit	Effective	Control Mode		
		0~1000	0	0.1ms	Immediate			T

P01.29	Torque control gain switchover grade	Range	Default	Unit	Effective	Control Mode		
		0~20000	0	-	Immediate			T

P01.30	Torque control gain switchover hysteresis	Range	Default	Unit	Effective	Control Mode		
		0~20000	0	-	Immediate			T

P01.31	Observer enable	Range	Default	Unit	Effective	Control Mode		
		0~2	0	-	Restart	P	S	T

0：Debugging

1：Disable

2：Enable

P01.32	Observer cutoff frequency	Range	Default	Unit	Effective	Control Mode		
		0~500	100	1HZ	Restart	P	S	T

The greater the cutoff frequency, the faster the response of speed observation and speed feedback, which may cause abnormal noise.

P01.33	Observer phase compensation time	Range	Default	Unit	Effective	Control Mode		
		0 ～ 10000	0	0.01ms	Immediate	P	S	T

Compensation feedback detection delay may increase the stability margin within a certain range, but should not be set too large.

		Range	Default	Unit	Effective	Control Mode		
P01.34	Observer inertia coefficient	0 ～ 10000	1000	0.01ms	Restart	P	S	T

The recommended setting value is 1024 when the inertia is stable and accurate.

- **P02 Group Vibration Suppression Parameters**

		Range	Default	Unit	Effective	Control Mode		
P02.00	Position instruction smoothing filter	0~65535	0	0.1ms	Immediate	P		

This parameter is position instruction first order low-pass filtering time constant.

		Range	Default	Unit	Effective	Control Mode		
P02.01	Position instruction FIR filter	0~1280	0	0.1ms	Immediate	P		

		Range	Default	Unit	Effective	Control Mode		
P02.02	Adaptive filtering mode	0~4	0	-	Immediate	P	S	

0: Adaptive invalid, 3rd & 4th filters are functioning but parameters are not updated;

1: Only 3rd filter is functioning with updated parameters;

2: 3rd & 4th filters are functioning with updated parameters;

3: Resonance frequency testing, but parameters are not updated;

4: Clear adaptive records, 3rd & 4th filters are not functioning.

		Range	Default	Unit	Effective	Control Mode		
P02.03	Adaptive filtering load mode	0~1	0	-	Immediate	P	S	T

0：High stiffness load

1：Low stiffness load

		Range	Default	Unit	Effective	Control Mode		
P02.04	First notch filter frequency (manual)	50~5000	5000	1Hz	Immediate	P	S	

This is the central frequency of first notch filter. If set to 5000 (default), it is invalid.

		Range	Default	Unit	Effective	Control Mode		
P02.05	First notch filter width	0~12	2	-	Immediate	P	S	

		Range	Default	Unit	Effective	Control Mode		
P02.06	First notch filter depth	0~99	0	-	Immediate	P	S	

		Range	Default	Unit	Effective	Control Mode		
P02.07	Second notch filter frequency (manual)	50~5000	5000	1Hz	Immediate	P	S	

		Range	Default	Unit	Effective	Control Mode		
P02.08	Second notch filter width	0~12	2	-	Immediate	P	S	

		Range	Default	Unit	Effective	Control Mode		
P02.09	Second notch filter depth	0~99	0	-	Immediate	P	S	

P02.10	Third notch filter frequency	Range	Default	Unit	Effective	Control Mode		
		50~5000	5000	1Hz	Immediate	P	S	

P02.11	Third notch filter width	Range	Default	Unit	Effective	Control Mode		
		0~12	2	-	Immediate	P	S	

P02.12	Third notch filter depth	Range	Default	Unit	Effective	Control Mode		
		0~99	0	-	Immediate	P	S	

P02.13	Fourth notch filter frequency	Range	Default	Unit	Effective	Control Mode		
		50~5000	5000	1Hz	Immediate	P	S	

P02.14	Fourth notch filter width	Range	Default	Unit	Effective	Control Mode		
		0~12	2	-	Immediate	P	S	

P02.15	Fourth notch filter depth	Range	Default	Unit	Effective	Control Mode		
		0~99	0	-	Immediate	P	S	

P02.19	Position instruction FIR filter 2	Range	Default	Unit	Effective	Control Mode		
		0~1280	0	0.1ms	Immediate	P		

P02.20	First vibration attenuation frequency	Range	Default	Unit	Effective	Control Mode		
		0~1000	0	0.1Hz	Immediate	P	S	

Frequency value of low-frequency resonance point 1.

P02.21	First vibration attenuation filter setting	Range	Default	Unit	Effective	Control Mode		
		0~10	0	0.1	Immediate	P	S	

Half-cycle attenuation coefficient of low-frequency resonance point 1.

P02.22	Second vibration attenuation frequency	Range	Default	Unit	Effective	Control Mode		
		0~1000	0	0.1Hz	Immediate	P	S	

Frequency value of low-frequency resonance point 2.

P02.23	Second vibration attenuation filter setting	Range	Default	Unit	Effective	Control Mode		
		0~10	0	0.1	Immediate	P	S	

Half-cycle attenuation coefficient of low-frequency resonance point 2.

P02.31	Resonance point 1 frequency	Range	Default	Unit	Effective	Control Mode		
		0~5000	5000	1Hz	Display only	P	S	

Resonance frequency detected by adaptive first notch filter.

P02.32	Resonance point 1 bandwidth	Range	Default	Unit	Effective	Control Mode		
		0~20	2	-	Display only	P	S	

Resonance frequency width detected by adaptive first notch filter.

P02.33	Resonance point 1 amplitude	Range	Default	Unit	Effective	Control Mode		
		0 ~1000	0	-	Display only	P	S	

Resonance frequency width detected by adaptive first notch filter.

P02.34	Resonance point 2 frequency	Range	Default	Unit	Effective	Control Mode		
		0~5000	5000	1Hz	Display only	P	S	

Resonance frequency detected by adaptive second notch filter.

P02.35	Resonance point 2 bandwidth	Range	Default	Unit	Effective	Control Mode		
		0~20	2	-	Display only	P	S	

Resonance frequency width detected by adaptive second notch filter.

P02.36	Resonance point 2 amplitude	Range	Default	Unit	Effective	Control Mode		
		0~1000	0	-	Display only	P	S	

Resonance frequency width detected by adaptive second notch filter.

- **P03 Group Speed & Torque Control Parameters**

P03.00	Speed instruction source selection	Range	Default	Unit	Effective	Control Mode		
		0~6	0	-	Restart		S	

0: by P03.03 setting value;

1: SPR (default AI1);

2: SPR, multi-stage 2~16 switchover;

3: multi-stage 1~16 switchover;

4: communication setting;

5: SPR + digital setting;

6: multi-stage 1~16 switchover + digital setting.

P03.03	Speed instruction digital setting	Range	Default	Unit	Effective	Control Mode		
		-9000~9000	200	1RPM	Immediate		S	

P03.04	JOG speed setting	Range	Default	Unit	Effective	Control Mode		
		0~3000	200	1RPM	Immediate		S	

P03.08	Torque limit source	Range	Default	Unit	Effective	Control Mode		
		0~3	0	-	Immediate	P	S	

0: Internal torque limit by P03.09, P03.10

1: External torque limit by P03.11, P03.12 enabled by P_CL/N_CL signals

2: TLMTP i.e. AI1 or AI2 as external forward/reverse torque limit

3: TLMTP as forward limit; TLMTN as reverse limit

P03.09	Internal forward torque limit	Range	Default	Unit	Effective	Control Mode		
		0~5000	3000	0.1%	Immediate	P	S	T

Relative to motor rated torque (100.0%).

P03.10	Internal reverse torque limit	Range	Default	Unit	Effective	Control Mode		
		0~5000	3000	0.1%	Immediate	P	S	

Relative to motor rated torque (100.0%).

P03.11	External forward torque limit	Range	Default	Unit	Effective	Control Mode		
		0~5000	3000	0.1%	Immediate	P	S	

Relative to motor rated torque (100.0%).

P03.12	External reverse torque limit	Range	Default	Unit	Effective	Control Mode		
		0~5000	3000	0.1%	Immediate	P	S	

Relative to motor rated torque (100.0%).

P03.14	Acceleration time 1	Range	Default	Unit	Effective	Control Mode		
		0~65535	10	1ms	Immediate		S	

0ms~65535ms/1000rpm

P03.15	Deceleration time 1	Range	Default	Unit	Effective	Control Mode		
		0~65535	10	1ms	Immediate		S	

0ms~65535ms/1000rpm

P03.16	Acceleration time 2	Range	Default	Unit	Effective	Control Mode		
		0~65535	10	1ms	Immediate			T

0ms~65535ms/1000rpm

P03.17	Deceleration time 2	Range	Default	Unit	Effective	Control Mode		
		0~65535	10	1ms	Immediate			T

0ms~65535ms/1000rpm

P03.19	Zero-speed clamp function	Range	Default	Unit	Effective	Control Mode		
		0~2	0	-	Immediate		S	T

0: Invalid

1: When ZERO_SPD is valid, the speed command is forced to be 0.

2: When ZERO_SPD is valid, the speed command is forced to be 0. When the actual speed of motor is less than the value of P03.20, servo will switch over to position control mode and lock.

P03.20	Zero-speed clamp threshold value	Range	Default	Unit	Effective	Control Mode		
		0~1000	10	1RPM	Immediate		S	T

P03.22	Torque instruction source	Range	Default	Unit	Effective	Control Mode		
		0~4	0	-	Restart			T

0: Digital setting of P03.25;

1: TQR;

2: Digital setting, TQR switchover (CMD_SEL);

3: Communication setting;

4: TQR+ Digital setting.

P03.25	Torque instruction digital setting value	Range	Default	Unit	Effective	Control Mode		
		-3000~3000	0	0.1%	Immediate			T

-300.0%~300.0% (relative to motor rated torque)

P03.26	Speed limit source in torque control	Range	Default	Unit	Effective	Control Mode		
		0~1	0	-	Immediate			T

0: Internal positive/negative speed limit P03.27 and P3.28

1: SPL

P03.27	Internal positive speed limit	Range	Default	Unit	Effective	Control Mode		
		0~9000	3000	1RPM	Immediate			T

P03.28	Internal negative speed limit	Range	Default	Unit	Effective	Control Mode		
		0~9000	3000	-	Immediate			T

P03.29	Hard limit torque limit	Range	Default	Unit	Effective	Control Mode		
		0~4000	1000	0.1%	Immediate	P		

When contacting the torque limit at hard limit, this should be -300. 0% to 300. 0%(based on the rated torque of motor). When the torque instruction increases rapidly and time exceeds the detection time set in P03.30, it's considered to contact hard limit. Use torque instruction sign to distinguish positive/ negative hard limit.

When the third digit of P07.08 from the right side is set to 1 or 2, this parameter becomes valid.

P03.30	Hard limit torque limit detection time	Range	Default	Unit	Effective	Control Mode		
		0~2000	100	-	Immediate	P		

When the third digit of P07.08 from the right side is set to 1 or 2, this parameter becomes valid.

P03.31	Internal speed instruction segment number selection mode	Range	Default	Unit	Effective	Control Mode		
		0~1	0	-	Restart		S	

0: DI terminal selection

1: Communication

P03.32	Acceleration time selection for internal speed segment 1-8	Range	Default	Unit	Effective	Control Mode		
		0~1	0	-	Immediate		S	

0: Acceleration time 1 (P03.14);

1: Acceleration time 2 (P03.16).

P03.33	Deceleration time selection for internal speed segment 1-8	Range	Default	Unit	Effective	Control Mode		
		0~1	0	-	Immediate		S	

0: Deceleration time 1 (P03.15);

1: Deceleration time 2 (P03.17).

P03.34	Acceleration time selection for internal speed segment 9-16	Range	Default	Unit	Effective	Control Mode		
		0~1	0	-	Immediate		S	

0: Acceleration time 1 (P03.14);

1: Acceleration time 2 (P03.16).

P03.35	Deceleration time selection for internal speed segment 9-16	Range	Default	Unit	Effective	Control Mode		
		0~1	0	-	Immediate		S	

0: Deceleration time 1 (P03.15);

1: Deceleration time 2 (P03.17).

P03.36	Segment 1 speed	Range	Default	Unit	Effective	Control Mode		
		-9000~9000	0	1RPM	Immediate		S	

P03.37	Segment 2 speed	Range	Default	Unit	Effective	Control Mode		
		-9000~9000	0	1RPM	Immediate		S	

P03.38	Segment 3 speed	Range	Default	Unit	Effective	Control Mode		
		-9000~9000	0	1RPM	Immediate		S	

P03.39	Segment 4 speed	Range	Default	Unit	Effective	Control Mode		
		-9000~9000	0	1RPM	Immediate		S	

P03.40	Segment 5 speed	Range	Default	Unit	Effective	Control Mode		
		-9000~9000	0	1RPM	Immediate		S	

P03.41	Segment 6 speed	Range	Default	Unit	Effective	Control Mode		
		-9000~9000	0	1RPM	Immediate		S	

P03.42	Segment 7 speed	Range	Default	Unit	Effective	Control Mode		
		-9000~9000	0	1RPM	Immediate		S	

P03.43	Segment 8 speed	Range	Default	Unit	Effective	Control Mode		
		-9000~9000	0	1RPM	Immediate		S	

P03.44	Segment 9 speed	Range	Default	Unit	Effective	Control Mode		
		-9000~9000	0	1RPM	Immediate		S	

P03.45	Segment 10 speed	Range	Default	Unit	Effective	Control Mode		
		-9000~9000	0	1RPM	Immediate		S	

P03.46	Segment 11 speed	Range	Default	Unit	Effective	Control Mode		
		-9000~9000	0	1RPM	Immediate		S	

P03.47	Segment 12 speed	Range	Default	Unit	Effective	Control Mode		
		-9000~9000	0	1RPM	Immediate		S	

P03.48	Segment 13 speed	Range	Default	Unit	Effective	Control Mode		
		-9000~9000	0	1RPM	Immediate		S	

P03.49	Segment 14 speed	Range	Default	Unit	Effective	Control Mode		
		-9000~9000	0	1RPM	Immediate		S	

P03.50	Segment 15 speed	Range	Default	Unit	Effective	Control Mode		
		-9000~9000	0	1RPM	Immediate		S	

P03.51	Segment 16 speed	Range	Default	Unit	Effective	Control Mode		
		-9000~9000	0	1RPM	Immediate		S	

- **P04 Group Digital Input/output Parameters**

P04.00	Normal DI filter selection	Range	Default	Unit	Effective	Control Mode		
		0~10000	500	1μs	Restart	P	S	T

This parameter is only applicable to DI1 to DI6. For DI7 to DI9, refer to P06.44.

P04.01	DI1 terminal function selection	Range	Default	Unit	Effective	Control Mode

		0~63	1	-	Restart	P	S	T

Input function codes：0，1-63

0：No definition

1～63：FunI N. 1～63（Refer to the table of DI function. Some DI haven't been defined, reserved）

Please refer to table below:

Value	Sign	Name	Remarks
1	S_ON	Servo enable	Invalid-Servo disabled Valid-Servo enabled
2	ERR_RST	Error reset	Valid when detecting edge changes.
3	GAIN_SEL	Gain switchover	Invalid-Speed control loop is PI control. Valid- Speed control loop is P control.
4	CMD_SEL	Command switchover	Invalid: present command is A Valid: present command is B
5	PERR_CLR	Pulse deviation clear	Invalid-No operation Valid-Clear pulse deviation
6	MI_SEL1	16-stage instruction switchover	Select 16 position instruction or speed instruction to execute via DI terminal.
7	MI_SEL2	16-stage instruction switchover	
8	MI_SEL3	16-stage instruction switchover	
9	MI_SEL4	16-stage instruction switchover	
10	MODE_SEL	Control mode switchover	Switchover of control modes when P00.01 is set to 3, 4 or 5.
12	ZERO_SPD	Zero-speed clamp	Valid-Zero-speed clamp enabled Invalid- Zero-speed clamp disabled
13	INHIBIT	Pulse input inhibition	Valid- Pulse input inhibition Invalid-Pulse input allowed
14	P_OT	Positive over-travel	Use with limit switches for over-travel protections.
15	N_OT	Negative over-travel	Use with limit switches for over-travel protections.
16	P_CL	External forward torque limit	Valid-External torque limit is valid Invalid- External torque limit is invalid
17	N_CL	External reverse torque limit	Valid- External torque limit is valid Invalid- External torque limit is invalid
18	P_JOG	Positive JOG	Valid- Input according to the specified instruction Invalid-Instruction input stop
19	N_JOG	Negative JOG	
20	GEAR_SEL1	Electronic gear selection	GEAR_SEL1 invalid, GEAR_SEL2 invalid: electronic gear 1 GEAR_SEL1 valid, GEAR_SEL2 invalid: electronic gear 2 GEAR_SEL1 invalid, GEAR_SEL2 valid: electronic gear 3 GEAR_SEL1 valid, GEAR_SEL2 valid: electronic gear 4
21	GEAR_SEL2		

22	POS_DIR	Position instruction negation	Invalid-No reverse; Valid-Reverse
23	SPD_DIR	Speed instruction negation	Invalid-No reverse; Valid-Reverse
24	TOQ_DIR	Torque instruction negation	Invalid-No reverse; Valid-Reverse
25	PSEC_EN	Internal multi-stage enable	Invalid-Disable internal multi-stage instruction; Valid- Enable internal multi-stage instruction
26	INTP_ULK	Interrupt positioning release	Valid: when P08.86 is set to 2 or 4
27	INTP_OFF	Interrupt positioning inhibit	Valid: when P08.86 is set to non-zero value
28	HOME_IN	Homing origin point	Can be used as origin position signal or deceleration position signal
29	STHOME	Homing start	Start homing operation.
30	ESTOP	Emergency stop	Invalid-No effect Valid-Emergency stop enabled
31	STEP	Step enable	Valid-Step enabled; Invalid- Instruction is 0, positioning
32	FORCE_ERR	Forced error protection	Invalid-No effect Valid- Forced error protection
34	INTP_TRIG	Interrupt positioning trigger	Valid: when P08.86 is set to non-zero value, can only use DI8 or DI9.
35	INPOSHAL T	Internal position instruction generation pause	Invalid-No effect Valid- Decelerate and pause executing internal multi-stage position and interrupt positioning
36	ANALOG_OFF	Analog input inhibition	Invalid-No effect, Valid- Analog input inhibition
37	ENC_SEN	SEN enable absolute position data sending	Invalid-No effect; Valid- OAOBOZ send absolute position data, cannot enable servo

P04.02	DI2 terminal function selection	Range	Default	Unit	Effective	Control Mode		
		0~63	2	-	Restart	P	S	T

P04.03	DI3 terminal function selection	Range	Default	Unit	Effective	Control Mode		
		0~63	13	-	Restart	P	S	T

P04.04	DI4 terminal function selection	Range	Default	Unit	Effective	Control Mode		
		0~63	5	-	Restart	P	S	T

P04.05	DI5 terminal function selection	Range	Default	Unit	Effective	Control Mode		
		0~63	25	-	Restart	P	S	T

P04.06	DI6 terminal function selection	Range	Default	Unit	Effective	Control Mode

		0~63	14	-	Restart	P	S	T

P04.07	DI7 terminal function selection	Range	Default	Unit	Effective	Control Mode		
		0~63	15	-	Restart	P	S	T

P04.08	DI8 terminal function selection	Range	Default	Unit	Effective	Control Mode		
		0~63	0	-	Restart	P	S	T

P04.09	DI9 terminal function selection	Range	Default	Unit	Effective	Control Mode		
		0~63	0	-	Restart	P	S	T

P04.11	DI1 terminal logic selection	Range	Default	Unit	Effective	Control Mode		
		0~1	0	-	Immediate	P	S	T

Input polarity:

0: Low level valid

1: High level valid

P04.12	DI2 terminal logic selection	Range	Default	Unit	Effective	Control Mode		
		0~1	0	-	Immediate	P	S	T

P04.13	DI3 terminal logic selection	Range	Default	Unit	Effective	Control Mode		
		0~1	0	-	Immediate	P	S	T

P04.14	DI4 terminal logic selection	Range	Default	Unit	Effective	Control Mode		
		0~1	0	-	Immediate	P	S	T

P04.15	DI5 terminal logic selection	Range	Default	Unit	Effective	Control Mode		
		0~1	0	-	Immediate	P	S	T

P04.16	DI6 terminal logic selection	Range	Default	Unit	Effective	Control Mode		
		0~1	1	-	Immediate	P	S	T

P04.17	DI7 terminal logic selection	Range	Default	Unit	Effective	Control Mode		
		0~1	1	-	Immediate	P	S	T

P04.18	DI8 terminal logic selection	Range	Default	Unit	Effective	Control Mode		
		0~1	0	-	Immediate	P	S	T

P04.19	DI9 terminal logic selection	Range	Default	Unit	Effective	Control Mode		
		0~1	0	-	Immediate	P	S	T

P04.21	DO1 terminal function selection	Range	Default	Unit	Effective	Control Mode		
		0~31	11	-	Restart	P	S	T

Output function codes： 1-31

0：No definition

1～31：FunOUT. 1～31（Refer to the table of DO function. Some haven't been defined, reserved）

Please refer to table below:

Value	Sign	Name	Remarks
1	S_RDY	Servo ready	Valid- Servo ready Invalid- Servo not ready
2	S_ERR	Servo error	Valid when detecting error
3	S_WARN	Servo warning	Valid when alarm output
4	TGON	Motor rotation	Valid-Motor rotation is valid Invalid- Motor rotation is invalid.
5	V_ZERO	Motor speed is 0	Valid- Motor speed is 0 Invalid- Motor speed is not 0
6	V_CMP	Speed conformity	Speed control, valid when absolute deviation of motor speed and speed instruction is less than the settings of P04.44.
7	COIN	Positioning completed	Position control, valid when pulse deviation is less than the settings of P04.47.
8	NEAR	Positioning near	Position control, valid when pulse deviation is less than the settings of P04.50.
9	T_LT	Torque in limit	Valid - Motor torque is in limit Invalid - Motor torque is not in limit
10	V_LT	Speed in limit	Valid - Motor speed is in limit Invalid - Motor speed is not in limit
11	BKOFF	Brake release	Valid –Brake release，motor rotate Invalid –Motor shaft lock
12	T_ARR	Torque reached	Valid when torque feedback reaches the settings of P04.55; allowable fluctuations set in P04.56.
13	V_ARR	Speed reached	Valid when speed feedback reaches the settings of P04.45; allowable fluctuations ±10rpm.
15	INTP_DONE	Interrupt positioning complete	Position deviation is smaller than setting value of 04.47 at interrupt positioning. Signal holding time is set by 04.49.
16	DB_OUT	Dynamic brake output	Requires external relay or contactor and current limiting resistor
17	HOME	Homing complete	
18	INTP_WORK	Interrupt positioning working	Interrupt positioning execution
19	PCOM1	Position 1 comparison trigger signal	Output trigger signal when position 1 reaches the corresponding range
20	PCOM2	Position 2 comparison trigger signal	Output trigger signal when position 2 reaches the corresponding range
21	PCOM3	Position 3 comparison trigger signal	Output trigger signal when position 3 reaches the corresponding range
22	PCOM4	Position 4 comparison trigger signal	Output trigger signal when position 4 reaches the corresponding range

P04.22	DO2 terminal function selection	Range	Default	Unit	Effective	Control Mode

		0~31	4	-	Restart	P	S	T

P04.23	DO3 terminal function selection	Range	Default	Unit	Effective	Control Mode		
		0~31	7	-	Restart	P	S	T

P04.24	DO4 terminal function selection	Range	Default	Unit	Effective	Control Mode		
		0~31	5	-	Restart	P	S	T

P04.25	DO5 terminal function selection	Range	Default	Unit	Effective	Control Mode		
		0~31	9	-	Restart	P	S	T

P04.26	DO6 terminal function selection	Range	Default	Unit	Effective	Control Mode		
		0~31	6	-	Restart	P	S	T

P04.27	DO7 terminal function selection	Range	Default	Unit	Effective	Control Mode		
		0~31	1	-	Restart	P	S	T

P04.28	DO8 terminal function selection	Range	Default	Unit	Effective	Control Mode		
		0~31	2	-	Restart	P	S	T

P04.29	DO9 terminal function selection	Range	Default	Unit	Effective	Control Mode		
		0~31	0	-	Restart	P	S	T

P04.31	DO1 terminal logic selection	Range	Default	Unit	Effective	Control Mode		
		0~1	0	-	Immediate	P	S	T

Output polarity:0-1

0: Connected at valid (normally-open contacts)

1: Disconnected at valid (normally-closed contacts)

P04.32	DO2 terminal logic selection	Range	Default	Unit	Effective	Control Mode		
		0~1	0	-	Immediate	P	S	T

P04.33	DO3 terminal logic selection	Range	Default	Unit	Effective	Control Mode		
		0~1	0	-	Immediate	P	S	T

P04.34	DO4 terminal logic selection	Range	Default	Unit	Effective	Control Mode		
		0~1	0	-	Immediate	P	S	T

P04.35	DO5 terminal logic selection	Range	Default	Unit	Effective	Control Mode		
		0~1	0	-	Immediate	P	S	T

P04.36	DO6 terminal logic selection	Range	Default	Unit	Effective	Control Mode		
		0~1	0	-	Immediate	P	S	T

P04.37	DO7 terminal logic selection	Range	Default	Unit	Effective	Control Mode		
		0~1	0	-	Immediate	P	S	T

P04.38	DO8 terminal logic selection	Range	Default	Unit	Effective	Control Mode		
		0~1	1	-	Immediate	P	S	T

P04.39	DO9 terminal logic selection	Range	Default	Unit	Effective	Control Mode		
		0~1	0	-	Immediate	P	S	T

P04.41	FUNINL signal unassigned state (Hex)	Range	Default	Unit	Effective	Control Mode		
		0000H ～ FFFFH	0	-	Restart	P	S	T

0～0xFFFF

Bit0~Bit15 corresponds to DI functions 0~15.

P04.42	FUNINH signal unassigned state (Hex)	Range	Default	Unit	Effective	Control Mode		
		0000H ～ FFFFH	0	-	Restart	P	S	T

0～0xFFFF

Bit0~Bit15 corresponds to DI functions 16~31.

P04.43	Motor rotational signal (TGON) threshold	Range	Default	Unit	Effective	Control Mode		
		0~1000	20	1RPM	Immediate	P	S	T

P04.44	Speed conformity signal (V_CMP) width	Range	Default	Unit	Effective	Control Mode		
		10~1000	50	1RPM	Immediate		S	

P04.45	Speed reached signal (V_ARR) width	Range	Default	Unit	Effective	Control Mode		
		10~9000	100	1RPM	Immediate	P	S	T

P04.47	Positioning completion (COIN) threshold	Range	Default	Unit	Effective	Control Mode		
		1~65535	100	1P	Immediate	P		

P04.48	Positioning completion output setting	Range	Default	Unit	Effective	Control Mode		
		0~7	0	-	Immediate	P		

0: When position deviation absolute value is less than the setting value of P04.47, output COIN signal;

1: When position deviation absolute value is less than the setting value of P04.47 and position instruction is 0, output COIN signal;

2- When position deviation absolute value is less than the setting value of P04.47 and position instruction is 0, output COIN signal and holding time is the setting value of P04.49.

3: When position deviation absolute value is less than the setting value of P04.47 and position instruction is 0 after filtering, output COIN signal;

4: Condition 0 and zero-speed signal is valid, output COIN signal;

5: Condition 1 and zero-speed signal is valid, output COIN signal;

6: Condition 2 and zero-speed signal is valid, output COIN signal;

7: Condition 3 and zero-speed signal is valid, output COIN signal.

P04.49	Positioning completion holding time	Range	Default	Unit	Effective	Control Mode		
		1~65535	1	1ms	Immediate	P		

P04.50	Positioning near (NEAR) threshold	Range	Default	Unit	Effective	Control Mode		
		1~65535	65535	1P	Immediate	P		

P04.51	Servo OFF delay time after holding brake taking action when speed is 0	Range	Default	Unit	Effective	Control Mode		
		10~500	10	1ms	Immediate	P	S	T

P04.52	Speed setting for holding brake to take action in motion	Range	Default	Unit	Effective	Control Mode		
		0~3000	100	1RPM	Immediate	P	S	T

P04.53	Waiting time for holding brake to take action in motion	Range	Default	Unit	Effective	Control Mode		
		0 ～ 9999	10	1ms	Immediate	P	S	T

P04.54	Special output function setting	Range	Default	Unit	Effective	Control Mode		
		0~3	0	-	Restart	P	S	T

0: Invalid

1: External DB output, DO9 only (please ensure safety)

2: OCZ output, DO6 only

3: Both 1 & 2 are in use

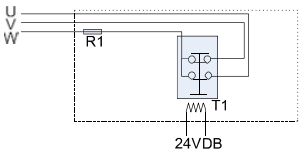

P04.55	Torque reached (T_ARR) threshold	Range	Default	Unit	Effective	Control Mode		
		0~3000	1000	0.1%	Immediate	P	S	T

P04.56	Torque reached signal width	Range	Default	Unit	Effective	Control Mode		
		0~3000	200	0.1%	Immediate	P	S	T

P04.57	Phase-Z pulse width adjustment	Range	Default	Unit	Effective	Control Mode		
		0~100	0	-	Restart	P	S	T

P04.58	Zero-speed signal output limit	Range	Default	Unit	Effective	Control Mode		
		0~1000	60	1rpm	Immediate	P	S	T

- **P05 Group Analog Input/output Parameters**

P05.00	AI1 minimum input	Range	Default	Unit	Effective	Control Mode		
		-1000~1000	-1000	0.01V	Restart	P	S	T

-10.00V~10.00V

P05.01	Corresponding value of AI1 minimum input	Range	Default	Unit	Effective	Control Mode		
		-1000~1000	-1000	0.1%	Restart	P	S	T

-100.0%~100.0% ((100% speed corresponds to P05.14 setting value, 100% torque corresponds to P05.15 setting value.)

P05.02	AI1 maximum input	Range	Default	Unit	Effective	Control Mode		
		-1000~1000	1000	0.01V	Restart	P	S	T

-10.00V~10.00V

P05.03	Corresponding value of AI1 maximum input	Range	Default	Unit	Effective	Control Mode		
		-1000~1000	1000	0.1%	Restart	P	S	T

-100.0%~100.0% ((100% speed corresponds to P05.14 setting value, 100% torque corresponds to P05.15 setting value.)

P05.04	AI1 zero offset	Range	Default	Unit	Effective	Control Mode		
		-500~500	0	1mV	Immediate	P	S	T

P05.05	AI1 dead-zone setting	Range	Default	Unit	Effective	Control Mode		
		0~200	0	0.1%	Immediate	P	S	T

P05.06	AI1 input filtering time	Range	Default	Unit	Effective	Control Mode		
		0~65535	20	0.1ms	Immediate	P	S	T

P05.07	AI2 minimum input	Range	Default	Unit	Effective	Control Mode		
		-1000~1000	-1000	0.01V	Restart	P	S	T

-10.00V~10.00V

P05.08	Corresponding value of AI2 minimum input	Range	Default	Unit	Effective	Control Mode		
		-1000~1000	-1000	0.1%	Restart	P	S	T

-100.0%~100.0% ((100% speed corresponds to P05.14 setting value, 100% torque corresponds to P05.15 setting value.)

P05.09	AI2 maximum input	Range	Default	Unit	Effective	Control Mode		
		-1000~1000	1000	0.01V	Restart	P	S	T

-10.00V~10.00V

P05.10	Corresponding value of AI2 maximum input	Range	Default	Unit	Effective	Control Mode		
		-1000~1000	1000	0.1%	Restart	P	S	T

-100.0%~100.0% ((100% speed corresponds to P05.14 setting value, 100% torque corresponds to P05.15 setting value.)

P05.11	AI2 zero offset	Range	Default	Unit	Effective	Control Mode		
		-500~500	0	1mV	Immediate	P	S	T

P05.12	AI2 dead-zone setting	Range	Default	Unit	Effective	Control Mode		
		0~200	0	0.1%	Immediate	P	S	T

P05.13	AI2 input filtering time	Range	Default	Unit	Effective	Control Mode		
		0~65535	20	0.1ms	Immediate	P	S	T

P05.14	AI setting 100% speed	Range	Default	Unit	Effective	Control Mode		
		0~9000	3000	1RPM	Immediate	P	S	T

0~9000RPM

P05.15	AI setting 100% torque	Range	Default	Unit	Effective	Control Mode		
		0~500	100	0.01	Immediate	P	S	T

0~5.00 times motor rated torque

P05.16	AI1 function selection	Range	Default	Unit	Effective	Control Mode		
		0~5	0	-	Immediate	P	S	T

0: SPR, speed instruction;

1: TQR, torque instruction;

2: SPL, speed limit;

3: TLMTP, positive torque limit;

4: TLMTN, negative torque limit;

5: TFFD, torque feedforward.

P05.17	AI2 function selection	Range	Default	Unit	Effective	Control Mode		
		0~5	3	-	Immediate	P	S	T

Same as P05.16.

P05.28	AO1 signal selection (need optional card)	Range	Default	Unit	Effective	Control Mode		
		0~13	0	-	Immediate	P	S	T

0: Motor speed (1V/1000RPM);

1: Speed instruction (1V/1000RPM);

2: Torque instruction (1V/100%);

3: Position deviation (0.05V/1 instruction unit);

4: Position amplifier deviation after electronic gear (0.05V/1 encoder unit);

5: Position instruction speed (1V/1000RPM);

6: Positioning completion (Completed: 5V; Not completed: 0V);

7: Speed feedforward (1V/1000RPM);

8: Torque feedforward (1V/100%);

9: Load ratio (1V/100%);

10: Regenerative load ratio (1V/100%);

11: Module temperature (0.1V/1□C);

12: AI1 (1V/1V);

13: AI2 (1V/1V).

P05.29	AO1 voltage offset	Range	Default	Unit	Effective	Control Mode		
		-10000~10000	0	mV	Immediate	P	S	T

P05.30	AO1 multiplier	Range	Default	Unit	Effective	Control Mode		
		-99.99~99.99	1.00	-	Immediate	P	S	T

P05.31	AO2 signal selection (need optional card)	Range	Default	Unit	Effective	Control Mode		
		0~13	0	-	Immediate	P	S	T

Same as P05.28.

P05.32	AO2 voltage offset	Range	Default	Unit	Effective	Control Mode

		-10000~10000	0	mV	Immediate	P	S	T

P05.33	AO2multiplier	Range	Default	Unit	Effective	Control Mode		
		-99.99~99.99	1.00	-	Immediate	P	S	T

P05.34	AO monitoring value types	Range	Default	Unit	Effective	Control Mode		
		0000H ～ 00FFH	0	-	Immediate	P	S	T

0 ～ 255

Hexadecimal, from right to left:

First digit: Set AO1 monitoring value types

Second digit: Set AO2 monitoring value types

0：Data output with sign, -10V ～ +10V，

1：Absolute data output，0 ～ 10V

- **P06 Group Expansion Parameters**

P06.00	Electronic gear numerator 2(32-bit)	Range	Default	Unit	Effective	Control Mode		
		1~1073741824	0	-	Immediate	P		

P06.02	Electronic gear numerator 3(32-bit)	Range	Default	Unit	Effective	Control Mode		
		1~1073741824	0	-	Immediate	P		

P06.04	Electronic gear numerator 4(32-bit)	Range	Default	Unit	Effective	Control Mode		
		1~1073741824	0	-	Immediate	P		

P06.06	Position deviation clearance function	Range	Default	Unit	Effective	Control Mode		
		0~3	0	-	Immediate	P		

0: Clear position deviation when servo is OFF and has error;

1: Clear position deviation only when servo has error;

2: Clear position deviation when servo is OFF and has error and PERR_CLR is valid;

3: Clear position deviation only by PERR_CLR

P06.09	Electronic gear ratio switchover delay	Range	Default	Unit	Effective	Control Mode		
		0~1	0	-	Restart	P	S	

0: Switch after position instruction maintains 0 for 10ms;

1: Real-time switchover.

P06.10	Potential energy load torque compensation	Range	Default	Unit	Effective	Control Mode		
		-100~100	0	1%	Immediate	P	S	

Compensation for gravitational load.

P06.11	P06.10 memory selections	Range	Default	Unit	Effective	Control Mode		
		0~2	2	-	Immediate	P	S	

0: Automatic update, memory at power off;

1: Automatic update, initialize after power off;

2: Not automatic update.

P06.12	Forward friction torque compensation	Range	Default	Unit	Effective	Control Mode		
		-3000 ～ 3000	0	0. 1%	Immediate	P	S	

P06.13	Reverse friction torque compensation	Range	Default	Unit	Effective	Control Mode		
		-3000 ～ 3000	0	0. 1%	Immediate	P	S	

P06.14	Viscous friction compensation	Range	Default	Unit	Effective	Control Mode		
		-3000 ～ 3000	0	0. 1%	Immediate	P	S	

P06.15	Friction compensation time constant	Range	Default	Unit	Effective	Control Mode		
		0 ～ 10000	0	0. 1%	Immediate	P	S	

P06.16	Friction compensation low-speed zone	Range	Default	Unit	Effective	Control Mode		
		0 ～ 500	1	1rpm	Immediate	P	S	

P06.19	Parameter identification rate	Range	Default	Unit	Effective	Control Mode		
		100~1000	500	-	Restart	P	S	

P06.20	Parameter identification acceleration time	Range	Default	Unit	Effective	Control Mode		
		50~10000	100	-	Restart	P	S	

P06.21	Parameter identification deceleration time	Range	Default	Unit	Effective	Control Mode		
		50~10000	100	-	Restart	P	S	

P06.22	Parameter identification mode selection	Range	Default	Unit	Effective	Control Mode		
		0~1	0	-	Restart	P	S	

0: During auto-tuning, not update inertia automatically;

1: During auto-tuning, update inertia automatically.

P06.23	Initial angle identification current limit	Range	Default	Unit	Effective	Control Mode		
		0~2000	500	0.1%	Restart	P	S	T

P06.24	Instantaneous power failure protection	Range	Default	Unit	Effective	Control Mode		
		0~2	0	-	Immediate	P	S	T

0: No protection;

1: With protection;

2: With protection and automatic reset.

P06.25	Instantaneous power failure deceleration time	Range	Default	Unit	Effective	Control Mode		
		0~10000	20	1ms	Immediate	P	S	T

The setting range is 0~10000ms/1000RPM.

P06.26	Servo OFF stop mode selection	Range	Default	Unit	Effective	Control Mode		
		0~2	0	-	Restart	P	S	T

0: Coast to stop;

1: Zero-speed stop;

2: Stop by emergency torque (P06.32).

P06.27	Second category fault stop mode selection	Range	Default	Unit	Effective	Control Mode		
		0~2	0	-	Restart	P	S	T

Same as P06.26.

P06.28	Over-travel input setting	Range	Default	Unit	Effective	Control Mode		
		0~1	1	-	Restart	P	S	T

0: P_OT and N_OT are valid;

1: Over-travel is invalid.

P06.29	Over-travel stop mode selection	Range	Default	Unit	Effective	Control Mode		
		0~2	0	-	Restart	P	S	T

Same as P06.26.

P06.30	Input power phase loss protection	Range	Default	Unit	Effective	Control Mode		
		0~1	0	-	Immediate	P	S	T

0: With protection;

1: Without protection.

P06.31	Output power phase loss protection	Range	Default	Unit	Effective	Control Mode		
		0~1	0	-	Immediate	P	S	T

0: With protection;

1: Without protection.

P06.32	Emergency stop torque	Range	Default	Unit	Effective	Control Mode		
		0~5000	1000	0.1%	Immediate	P	S	T

0.0% to 300.0% motor rated torque

P06.33	Tripping protection function	Range	Default	Unit	Effective	Control Mode		
		0~1	0	-	Immediate	P	S	T

0: With protection;

1: Without protection.

P06.34	Overload warning value	Range	Default	Unit	Effective	Control Mode		
		1~100	100	1%	Immediate	P	S	T

P06.35	Motor overload protection coefficient	Range	Default	Unit	Effective	Control Mode		
		10~300	100	1%	Immediate	P	S	T

P06.36	Undervoltage protection point	Range	Default	Unit	Effective	Control Mode		
		50~130	100	1%	Immediate	P	S	T

50%~100% to default undervoltage protection point.

P06.37	Over-speed error point	Range	Default	Unit	Effective	Control Mode		
		50~120	120	1%	Immediate	P	S	T

50%~120% to motor maximum speed.

P06.38	Maximum input pulse frequency	Range	Default	Unit	Effective	Control Mode

		10~9000	500	1KHz	Restart	P		

P06.39	Short circuit to ground detection protection selection	Range	Default	Unit	Effective	Control Mode		
		0~1	1	-	Immediate	P	S	T

0: With protection;

1: Without protection.

P06.40	Encoder interference detection delay	Range	Default	Unit	Effective	Control Mode		
		0~99	0	-	Immediate	P	S	

P06.41	Input pulse filtering setting	Range	Default	Unit	Effective	Control Mode		
		0~500	80	-	Restart	P		

Recommended value for this parameter:

Input pulse frequency	P06.41 setting
Below 250KHz	40
250KHz to 500KHz	20
500KHz to 1MHz	10
1MHz to 2MHz	5
Above 2MHz	0

P06.42	Input pulse inhibition setting	Range	Default	Unit	Effective	Control Mode		
		0~3	0	-	Restart	P		

Only DI7, 8, 9 can be used.

0: 0.5ms twice continuously consistent;

1: 0.5ms three times continuously consistent;

2: 1ms three times continuously consistent;

3: 2ms three times continuously consistent.

P06.43	Deviation clearance input setting	Range	Default	Unit	Effective	Control Mode		
		0~1	0	-	Restart	P		

Only DI7, 8, 9 can be used.

0: Level is valid;

1: Edge is valid.

P06.44	High speed DI filtering setting	Range	Default	Unit	Effective	Control Mode		
		0~10000	1000	1μs	Restart	P	S	T

Only DI7, 8, 9 can be used.

P06.45	Speed deviation too large threshold	Range	Default	Unit	Effective	Control Mode		
		10~10000	0	1RPM	Immediate	P	S	

0: speed deviation detection is disabled;

1~10000: if speed deviation is over this value, Err.16 will output.

P06.46	Torque saturation overtime setting	Range	Default	Unit	Effective	Control Mode		
		0~30000	0	1ms	Immediate	P	S	T

If torque is saturated for time longer than this value, Err.17 will output.

P06.47	Absolute system setting	Range	Default	Unit	Effective	Control Mode

		0~19	0	-	Immediate	P	S	T

One's place:

0: Incremental system;

1: Absolute system;

2: Absolute system (Err.12 needs manual clearance, industrial robotics special);

3~9: Absolute system with overflow error.

Ten's place:

0: Battery undervoltage warning but keep running;

1: Battery undervoltage warning and stop.

P06.48	Encoder battery undervoltage threshold	Range	Default	Unit	Effective	Control Mode		
		0~33	30	0.1V	Restart	P	S	T

Refer to P06.47.

P06.49	High-speed pulse input filter	Range	Default	Unit	Effective	Control Mode		
		0~500	80	-	Restart	P	S	T

0 ～500(Unit:10ns)

For 250KHZ or less，recommended value is 40；

For 250K ～500K, 20；

For 500K ～1M, 10；

For 1M or more, 5；

For 2M or more, 0.

- **<u>P07 Group Auxiliary function Parameters</u>**

P07.00	Panel display	Range	Default	Unit	Effective	Control Mode		
		0000H ～ FFFFH	0	-	Immediate	P	S	T

Hexadecimal, from right to left:

First digit: Display the setting at homepage of panel

0：Status display

When set to 1 to 5, display the parameters set in P07. 01 ～ P07. 05.

Others are reserved.

P07.01	Panel monitoring parameter setting 1	Range	Default	Unit	Effective	Control Mode		
		0~69	1	-	Immediate	P	S	T

This parameter is for displaying P21 group parameters except for P21.00.

P07.02	Panel monitoring parameter setting 2	Range	Default	Unit	Effective	Control Mode		
		0~69	5	-	Immediate	P	S	T

P07.03	Panel monitoring parameter setting 3	Range	Default	Unit	Effective	Control Mode		
		0~69	6	-	Immediate	P	S	T

P07.04	Panel monitoring parameter setting 4	Range	Default	Unit	Effective	Control Mode		
		0~69	21	-	Immediate	P	S	T

P07.05	Panel monitoring parameter setting 5	Range	Default	Unit	Effective	Control Mode

		0~69	23	-	Immediate	P	S	T

P07.06	Panel monitoring parameter setting 6	Range	Default	Unit	Effective	Control Mode		
		0~69	0	-	Immediate	P	S	T

P07.07	Panel monitoring parameter setting 7	Range	Default	Unit	Effective	Control Mode		
		0~69	0	-	Immediate	P	S	T

P07.08	Function selection 1	Range	Default	Unit	Effective	Control Mode		
		0000H ～ FFFFH	0	-	Immediate	P	S	T

Hexadecimal, from right to left:

First digit: Time multiplier of origin search

Second digit: Deviation clear selection at pulse inhibition:

0： Non-automatic clear deviation at pulse inhibition

1： Automatic clear deviation at pulse inhibition

Third digit: Limit detection method at origin search:

0： By D1 14 and 15 detection

1： By hard limit torque detection

2： DI function or hard limit torque detection

Fourth digit: Soft-limit detection:

0： No soft-limit detection

1： Enable soft-limit detection at power-on

2： Soft-limit detection after home return completion

P07.09	Function selection 2	Range	Default	Unit	Effective	Control Mode		
		0~69	0	-	Immediate	P	S	T

Reserved

P07.10	User password	Range	Default	Unit	Effective	Control Mode		
		0~69	0	-	Immediate	P	S	T

Reserved

P07.11	Instant power failure immediate memory function	Range	Default	Unit	Effective	Control Mode		
		0~1	0	-	Immediate	P	S	T

0: Disabled

1: Enabled

P07.12	User password screen-lock time	Range	Default	Unit	Effective	Control Mode		
		0~30	5	min	Immediate	P	S	T

P07.14	Fast deceleration time	Range	Default	Unit	Effective	Control Mode		
		1~9999	5	ms	Immediate	P	S	

P07.16	Function selection 3	Range	Default	Unit	Effective	Control Mode

		0000H ～ FFFFH	0	-	Immediate	P		

Hexadecimal, from right to left:

First digit: Interrupt positioning instruction setting

0： No adjustment with electronic gear;

1： Adjust with electronic gear

Second digit: Interrupt positioning instruction direction setting

0： Follow the current operation direction

1： Decided by instruction sign

Third digit: Effective method setting at start home return

0： Valid at low level

1： Valid at falling edge

Other digits are reserved.

P07.17	Maximum division number pre motor one revolution	Range	Default	Unit	Effective	Control Mode		
		0~99	0	-	Immediate	P		

P07.19	Function selection 5	Range	Default	Unit	Effective	Control Mode		
		0000H ～ FFFFH	0	-	Restart	P	S	T

Hexadecimal, from right to left,

First digit: Reserved

Second digit: Reserved

Third digit: Position feedback initialization selection

If not the absolute system(P06. 47=0),

0： Initialize to 0

1： Initialize to the value before power-off (Enabling 'Instant power failure immediate memory function' is required, that is P07. 11 is set to 1)

If absolute system(P06. 47≠ 0), decided by encoder value.

Fourth digit： Absolute position (P21. 07) and position feedback (P21. 17) counter bit width selection

0： 32-bit counter

1： 64-bit counter

When using 64-bit counter, low 32-bit of absolute position display in P21. 07 and high 32-bit displays in P21. 56;

Low 32-bit of position feedback displays in P21. 17 and high 32-bit displays in P21. 58.

P07.20	Function selection 6	Range	Default	Unit	Effective	Control Mode		
		0000H ～ FFFFH	0	-	Restart	P	S	T

Hexadecimal, from right to left:

First digit：Motor type selection

0：Read from encoder;

1：Manual setting；

Second digit： Software overcurrent detection

0： Enable

1： Disable

Other digits are reserved.

P07.21	Function selection 7	Range	Default	Unit	Effective	Control Mode		
		0000H ～ FFFFH	0	-	Restart	P	S	T

Hexadecimal, from right to left:

First digit： Servo not ready

0： No error or alarm

1： AL. 084 occurs

2： Er. 040 occurs

Second digit：Reserved

Third digit： DI DO monitoring display

0： By binary

1： By hexadecimal

Other digits are reserved.

P07.22	Function selection 8	Range	Default	Unit	Effective	Control Mode		
		0000H ～ FFFFH	0	-	Restart	P	S	T

Hexadecimal, from right to left:

First digit: Main power off(Err .56) detection setting

0： Err .56 detected and reset automatically

1： Err .56；Not detect Err .56

2： Err .56 detected but cannot reset automatically

Second digit：Undervoltage(Err .21) detection setting

0： Err .21 detected and reset automatically

1： Not detect Err .21.

2： Err .21 detected but cannot reset automatically.

Third digit： Error records of Err .21 and Err .56

0： Not stored

1： Stored

Fourth digit： Control power undervoltage error (Err .18) detection

0： Enable

1： Disabled

P07.23	Alarm reset time	Range	Default	Unit	Effective	Control Mode		
		0 ～1	0	-	Immediate	P	S	T

0： Reset at SON valid

1： Cannot reset at SON valid

P07.24	Positive soft-limit(32-bit)	Range	Default	Unit	Effective	Control Mode		
		-2147483648 ～ 2147483647	2147483647	-	Restart	P	S	T

This parameter becomes valid at position control, speed control and torque control mode.

P07.26	Negative soft-limit(32-bit)	Range	Default	Unit	Effective	Control Mode

		-2147483648 ～ 2147483647	-2147483648	-	Restart	P	S	T

This parameter becomes valid at position control, speed control and torque control mode.

- **P08 Group Internal Position Control Parameters**

P08.00	Internal position execution pattern selection	Range	Default	Unit	Effective	Control Mode		
		0~5	0	-	Restart	P		

0: Single operation

1: Cycle operation

2: DI terminal switchover operation

3: Communication switchover operation

4: Single continuous operation

5: Cycle continuous operation

There are totally 16-stage instructions, set the starting stage number by P08. 01 and ending stage number by P08. 02. For single operation, it starts from the starting stage, executes each stage's operation, then to the end stage. For cycle operation, starts from the starting stage, executes each stage's operation, to the end stage, then to the starting stage. It repeats the operation until the internal position signal becomes invalid or servo-off.

For 2 and 3, select the stage number by DI terminal or communication.

For 4 and 5, the difference is that there is need to decelerate to 0 before start the next stage operation. But for 0 and 1, it should decelerate to 0 before start the next stage operation.

P08.01	Starting stage number	Range	Default	Unit	Effective	Control Mode		
		0~16	1	-	Immediate	P		

The value of P08. 01 should be less than P08. 02. When P08.01 cannot be greater, change the P08.02 to the maximum expected value, and then modify P08. 01.

P08.02	Ending stage number	Range	Default	Unit	Effective	Control Mode		
		0~16	2	-	Immediate	P		

The value of P08.02 should be greater than P08.01.

P08.03	Restarting pattern of residual stags after pausing	Range	Default	Unit	Effective	Control Mode		
		0~1	1	-	Immediate	P		

0: Finish the residual stages

1: Operate from the start stage again

P08.04	Position instruction type selection	Range	Default	Unit	Effective	Control Mode		
		0~1	0	-	Immediate	P		

0: Relative position instruction

1: Absolute position instruction

P08.05	Unit for waiting time	Range	Default	Unit	Effective	Control Mode		
		0~1	0	-	Immediate	P		

0: The waiting time takes 'ms' as unit.

1: The waiting time takes 's' as unit

P08.06	Internal position control 1st stage	Range	Default	Unit	Effective	Control Mode

	length (32-bit)	-1073741824~ 1073741824	10000	-	Immediate	P		

P08.08	Internal position control 1st stage max speed	Range	Default	Unit	Effective	Control Mode		
		1~9000	200	1RPM	Immediate	P		

P08.09	Internal position control 1st stage acceleration/deceleration time	Range	Default	Unit	Effective	Control Mode		
		0~65535	10	1ms	Immediate	P		

P08.10	Waiting time after internal position control 1st stage completed	Range	Default	Unit	Effective	Control Mode		
		0~65535	0	1ms	Immediate	P		

P08.11	Internal position control 2nd stage length (32-bit)	Range	Default	Unit	Effective	Control Mode		
		-1073741824~ 1073741824	10000	-	Immediate	P		

P08.13	Internal position control 2nd stage max speed	Range	Default	Unit	Effective	Control Mode		
		1~9000	200	1RPM	Immediate	P		

P08.14	Internal position control 2nd stage acceleration/deceleration time	Range	Default	Unit	Effective	Control Mode		
		0~65535	10	1ms	Immediate	P		

P08.15	Waiting time after internal position control 2nd stage completed	Range	Default	Unit	Effective	Control Mode		
		0~65535	0	1ms	Immediate	P		

P08.16	Internal position control 3rd stage length (32-bit)	Range	Default	Unit	Effective	Control Mode		
		-1073741824~ 1073741824	10000	-	Immediate	P		

P08.18	Internal position control 3rd stage max speed	Range	Default	Unit	Effective	Control Mode		
		1~9000	200	1RPM	Immediate	P		

P08.19	Internal position control 3rd stage acceleration/deceleration time	Range	Default	Unit	Effective	Control Mode		
		0~65535	10	1ms	Immediate	P		

P08.20	Waiting time after internal position control 3rd stage completed	Range	Default	Unit	Effective	Control Mode		
		0~65535	0	1ms	Immediate	P		

P08.21	Internal position control 4th stage length (32-bit)	Range	Default	Unit	Effective	Control Mode		
		-1073741824~ 1073741824	10000	-	Immediate	P		

P08.23	Internal position control 4th stage max	Range	Default	Unit	Effective	Control Mode

	speed	1~9000	200	1RPM	Immediate	P		

P08.24	Internal position control 4th stage acceleration/deceleration time	Range	Default	Unit	Effective	Control Mode		
		0~65535	10	1ms	Immediate	P		

P08.25	Waiting time after internal position control 4th stage completed	Range	Default	Unit	Effective	Control Mode		
		0~65535	0	1ms	Immediate	P		

P08.26	Internal position control 5th stage length (32-bit)	Range	Default	Unit	Effective	Control Mode		
		-1073741824~ 1073741824	10000	-	Immediate	P		

P08.28	Internal position control 5th stage max speed	Range	Default	Unit	Effective	Control Mode		
		1~9000	200	1RPM	Immediate	P		

P08.29	Internal position control 5th stage acceleration/deceleration time	Range	Default	Unit	Effective	Control Mode		
		0~65535	10	1ms	Immediate	P		

P08.30	Waiting time after internal position control 5th stage completed	Range	Default	Unit	Effective	Control Mode		
		0~65535	0	1ms	Immediate	P		

P08.31	Internal position control 6th stage length (32-bit)	Range	Default	Unit	Effective	Control Mode		
		-1073741824~ 1073741824	10000	-	Immediate	P		

P08.33	Internal position control 6th stage max speed	Range	Default	Unit	Effective	Control Mode		
		1~9000	200	1RPM	Immediate	P		

P08.34	Internal position control 6th stage acceleration/deceleration time	Range	Default	Unit	Effective	Control Mode		
		0~65535	10	1ms	Immediate	P		

P08.35	Waiting time after internal position control 6th stage completed	Range	Default	Unit	Effective	Control Mode		
		0~65535	0	1ms	Immediate	P		

P08.36	Internal position control 7th stage length (32-bit)	Range	Default	Unit	Effective	Control Mode		
		-1073741824~ 1073741824	10000	-	Immediate	P		

P08.38	Internal position control 7th stage max speed	Range	Default	Unit	Effective	Control Mode		
		1~9000	200	1RPM	Immediate	P		

P08.39	Internal position control 7th stage acceleration/deceleration time	Range	Default	Unit	Effective	Control Mode		
		0~65535	10	1ms	Immediate	P		

P08.40	Waiting time after internal position control 7th stage completed	Range	Default	Unit	Effective	Control Mode		
		0~65535	0	1ms	Immediate	P		

P08.41	Internal position control 8th stage length (32-bit)	Range	Default	Unit	Effective	Control Mode		
		-1073741824~ 1073741824	10000	-	Immediate	P		

P08.43	Internal position control 8th stage max speed	Range	Default	Unit	Effective	Control Mode		
		1~9000	200	1RPM	Immediate	P		

P08.44	Internal position control 8th stage acceleration/deceleration time	Range	Default	Unit	Effective	Control Mode		
		0~65535	10	1ms	Immediate	P		

P08.45	Waiting time after internal position control 8th stage completed	Range	Default	Unit	Effective	Control Mode		
		0~65535	0	1ms	Immediate	P		

P08.46	Internal position control 9th stage length (32-bit)	Range	Default	Unit	Effective	Control Mode		
		-1073741824~ 1073741824	10000	-	Immediate	P		

P08.48	Internal position control 9th stage max speed	Range	Default	Unit	Effective	Control Mode		
		1~9000	200	1RPM	Immediate	P		

P08.49	Internal position control 9th stage acceleration/deceleration time	Range	Default	Unit	Effective	Control Mode		
		0~65535	10	1ms	Immediate	P		

P08.50	Waiting time after internal position control 9th stage completed	Range	Default	Unit	Effective	Control Mode		
		0~65535	0	1ms	Immediate	P		

P08.51	Internal position control 10th stage length (32-bit)	Range	Default	Unit	Effective	Control Mode		
		-1073741824~ 1073741824	10000	-	Immediate	P		

P08.53	Internal position control 10th stage max speed	Range	Default	Unit	Effective	Control Mode		
		1~9000	200	1RPM	Immediate	P		

P08.54	Internal position control 10th stage acceleration/deceleration time	Range	Default	Unit	Effective	Control Mode		
		0~65535	10	1ms	Immediate	P		

P08.55	Waiting time after internal position control 10th stage completed	Range	Default	Unit	Effective	Control Mode		
		0~65535	0	1ms	Immediate	P		

P08.56	Internal position control 11th stage length (32-bit)	Range	Default	Unit	Effective	Control Mode		
		-1073741824~1073741824	10000	-	Immediate	P		

P08.58	Internal position control 11th stage max speed	Range	Default	Unit	Effective	Control Mode		
		1~9000	200	1RPM	Immediate	P		

P08.59	Internal position control 11th stage acceleration/deceleration time	Range	Default	Unit	Effective	Control Mode		
		0~65535	10	1ms	Immediate	P		

P08.60	Waiting time after internal position control 11th stage completed	Range	Default	Unit	Effective	Control Mode		
		0~65535	0	1ms	Immediate	P		

P08.61	Internal position control 12th stage length (32-bit)	Range	Default	Unit	Effective	Control Mode		
		-1073741824~1073741824	10000	-	Immediate	P		

P08.63	Internal position control 12th stage max speed	Range	Default	Unit	Effective	Control Mode		
		1~9000	200	1RPM	Immediate	P		

P08.64	Internal position control 12th stage acceleration/deceleration time	Range	Default	Unit	Effective	Control Mode		
		0~65535	10	1ms	Immediate	P		

P08.65	Waiting time after internal position control 12th stage completed	Range	Default	Unit	Effective	Control Mode		
		0~65535	0	1ms	Immediate	P		

P08.66	Internal position control 13th stage length (32-bit)	Range	Default	Unit	Effective	Control Mode		
		-1073741824~1073741824	10000	-	Immediate	P		

P08.68	Internal position control 13th stage max speed	Range	Default	Unit	Effective	Control Mode		
		1~9000	200	1RPM	Immediate	P		

P08.69	Internal position control 13th stage acceleration/deceleration time	Range	Default	Unit	Effective	Control Mode		
		0~65535	10	1ms	Immediate	P		

P08.70	Waiting time after internal position control 13th stage completed	Range	Default	Unit	Effective	Control Mode		
		0~65535	0	1ms	Immediate	P		

P08.71	Internal position control 14th stage length (32-bit)	Range	Default	Unit	Effective	Control Mode		
		-1073741824~1073741824	10000	-	Immediate	P		

P08.73	Internal position control 14th stage max speed	Range	Default	Unit	Effective	Control Mode		
		1~9000	200	1RPM	Immediate	P		

P08.74	Internal position control 14th stage acceleration/deceleration time	Range	Default	Unit	Effective	Control Mode		
		0~65535	10	1ms	Immediate	P		

P08.75	Waiting time after internal position control 14th stage completed	Range	Default	Unit	Effective	Control Mode		
		0~65535	0	1ms	Immediate	P		

P08.76	Internal position control 15th stage length (32-bit)	Range	Default	Unit	Effective	Control Mode		
		-1073741824~ 1073741824	10000	-	Immediate	P		

P08.78	Internal position control 15th stage max speed	Range	Default	Unit	Effective	Control Mode		
		1~9000	200	1RPM	Immediate	P		

P08.79	Internal position control 15th stage acceleration/deceleration time	Range	Default	Unit	Effective	Control Mode		
		0~65535	10	1ms	Immediate	P		

P08.80	Waiting time after internal position control 15th stage completed	Range	Default	Unit	Effective	Control Mode		
		0~65535	0	1ms	Immediate	P		

P08.81	Internal position control 16th stage length (32-bit)	Range	Default	Unit	Effective	Control Mode		
		-1073741824~ 1073741824	10000	-	Immediate	P		

P08.83	Internal position control 16th stage max speed	Range	Default	Unit	Effective	Control Mode		
		1~9000	200	1RPM	Immediate	P		

P08.84	Internal position control 16th stage acceleration/deceleration time	Range	Default	Unit	Effective	Control Mode		
		0~65535	10	1ms	Immediate	P		

P08.85	Waiting time after internal position control 16th stage completed	Range	Default	Unit	Effective	Control Mode		
		0~65535	0	1ms	Immediate	P		

P08.86	Interrupt positioning setting	Range	Default	Unit	Effective	Control Mode		
		0~4	0	-	Restart	P		

0: Disable interrupt positioning function;

1: Enable, interrupt at DI signal rising edge and release the interrupt automatically after completion.

2: Enable, interrupt at DI signal rising edge and release the interrupt via DI signal INTP_ULK (DI function 26).

3: Enable, interrupt at DI signal falling edge and release the interrupt automatically after completion.

4: Enable, interrupt at DI signal falling edge and release the interrupt via DI signal INTP_ULK (DI function 26).

P08.88	Homing start modes	Range	Default	Unit	Effective	Control Mode

		0~4	0	-	Restart	P		

0: OFF

1: Start by STHOME via DI function

2: Start by operation panel

3: Start by communication

4: Immediate start at first servo ON

P08.89	Homing modes	Range	Default	Unit	Effective	Control Mode		
		0~8	2	-	Restart	P		

0: Forward origin search, take positive limit as origin

1: Backward origin search, take negative limit as origin

2: Forward origin search, take HOME_I N signal OFF→ON as origin

3: Backward origin search, take HOME_I N signal OFF→ON as origin

4: Forward origin search, take HOME_I N signal ON→OFF as origin

5: Backward origin search, take HOME_I N signal ON→OFF as origin

6: Forward, find the nearest Z-phase signal as origin

7: Backward, find the nearest Z-phase signal as origin

8: Take the present position as origin

P08.90	Limit switch and Z-phase signal at homing modes	Range	Default	Unit	Effective	Control Mode		
		0~5	2	-	Restart	P		

0: Reverse to find Z-phase signal after contacting limit switch;

1: Forward to find Z-phase signal after contacting limit switch;

2: Not find Z-phase signal after contacting limit switch;

3: Reverse for Z-pulse signal after contacting limit switch, stops and alarm occurs (AL. 086)

4: Forward for Z-pulse signal after contacting limit switch, stop sand alarm occurs (AL. 086)

5: Not find Z-pulse signal after contacting limit switch, stops and alarm occurs (AL. 086)

Note: For contacting limit switch, if home modes is set to 0 to 1, even though this parameter is set to 3, 4 or 5, no alarm or stop. If home modes is set to 0 to 1, find Z-phase signal after contacting limit switch; If home modes is set to 2 to 5, find Z-phase signal after contacting HOME_I N signal.

P08.92	Origin search high speed	Range	Default	Unit	Effective	Control Mode		
		1~3000	500	1RPM	Immediate	P		

Start with this speed when homing starts.

P08.93	Origin search low speed	Range	Default	Unit	Effective	Control Mode		
		1~300	50	1RPM	Immediate	P		

Switch to low speed after contacting origin point or deceleration point.

P08.94	Acceleration/deceleration time at origin search	Range	Default	Unit	Effective	Control Mode		
		1~10000	1000	1ms	Immediate	P		

Set the acceleration/deceleration time at the start/ stop of origin search.

P08.95	Homing time limit	Range	Default	Unit	Effective	Control Mode		
		1~65535	60000	1ms	Immediate	P		

Limit the longest time of homing. If origin point is still not found after the time set in P08.95, AL.96 occurs and operation stops.

P08.96	Origin point coordinate offset (32-bit)	Range	Default	Unit	Effective	Control Mode		
		-1073741824~	0	-	Immediate	P		

		1073741824						

The absolute position counter will be cleared after finding the origin point or set the absolute position counter to the value of this parameter.

P08.98	Mechanical origin point offset (32-bit)	Range	Default	Unit	Effective	Control Mode		
		-1073741824~ 1073741824	0	-	Immediate	P		

System can move further in the distance set in this parameter after origin point is found.

- **P09 Group Communication Setting Parameters**

P09.00	Modbus axis address	Range	Default	Unit	Effective	Control Mode		
		1~247	1	-	Immediate	P	S	T

P09.01	Modbus baud rate	Range	Default	Unit	Effective	Control Mode		
		0~6	2	-	Immediate	P	S	T

0: 2400bps

1: 4800bps

2: 9600bps

3: 19200bps

4: 38400bps

5: 57600bps

6: 115200bps

P09.02	Modbus data format	Range	Default	Unit	Effective	Control Mode		
		0~3	0	-	Immediate	P	S	T

0：No parity，8 data bit，2 stop bit

1：Even，8 data bit，1 stop bit

2：Odd，8 data bit，1 stop bit

3：No parity，8 data bit，1 stop bit

P09.03	Communication overtime	Range	Default	Unit	Effective	Control Mode		
		0~9999	0	1ms	Immediate	P	S	T

P09.04	Communication response delay	Range	Default	Unit	Effective	Control Mode		
		0~9999	0	1ms	Immediate	P	S	T

P09.05	Communication DI enabling setting 1	Range	Default	Unit	Effective	Control Mode		
		0000H ～ FFFFH	0	-	Restart	P	S	T

Bit0 is reserved. Bit1~Bit15 corresponds to DI functions 1-15.

0: Invalid

1: Valid

P09.06	Communication DI enabling setting 2	Range	Default	Unit	Effective	Control Mode		
		0000H ～	0	-	Restart	P	S	T

		FFFFH						

Bit0~Bit15 corresponds to DI functions 16-31.

0: Invalid

1: Valid

		Range	Default	Unit	Effective	Control Mode		
P09.07	Communication DI enabling setting 3	00000H ～ FFFFH	0	-	Restart	P	S	T

Bit0~Bit15 corresponds to DI functions 32-47.

0: Invalid

1: Valid

		Range	Default	Unit	Effective	Control Mode		
P09.08	Communication DI enabling setting 4	0000H ～ FFFFH	0	-	Restart	P	S	T

Bit0~Bit15 corresponds to DI functions 48-63.

0: Invalid

1: Valid

		Range	Default	Unit	Effective	Control Mode		
P09.09	Communication DO enabling setting 1	0000H ～ FFFFH	0	-	Restart	P	S	T

Bit0 is reserved. Bit1~Bit15 corresponds to DO functions 1-15.

0: Invalid

1: Valid

		Range	Default	Unit	Effective	Control Mode		
P09.10	Communication DO enabling setting 2	0000H ～ FFFFH	0	-	Restart	P	S	T

Bit0~Bit15 corresponds to DO functions 16-31.

0: Invalid

1: Valid

		Range	Default	Unit	Effective	Control Mode		
P09.11	Communication instruction holding time	0~60	5	-	Immediate	P	S	T

This is the time that communication instruction maintains after disconnection.

0: 0.5 second.

1~60: unit is second.

		Range	Default	Unit	Effective	Control Mode		
P09.12	Enable AO function or CAN communication	0000H ～ FFFFH	0	-	Restart	P	S	T

Hexadecimal, from right to left,

First digit:

0： Enable CANOpen communication

1： Enable AO function

Other digits are reserved.

		Range	Default	Unit	Effective	Control Mode		
P09.13	CAN communication configuration 1	0000H ～	5	-	Restart	P	S	T

		FFFFH						

Hexadecimal, from right to left,

First digit：CAN communication baud rate

0：20k；

1：50k；

2：100k；

3：125k；

4：250k；

5：500k；

6：800k；

7：1M

Second digit： Electronic gear ratio setting

0：Drive setting；

1：Master setting

Third digit：Unit for speed

0： Using internal unit

1： Using user's unit

Fourth digit： Unit for acceleration/deceleration

0：Using internal unit；

1：Using user's unit

P09.14	CAN communication configuration 2	Range	Default	Unit	Effective	Control Mode		
		0000H ～ FFFFH	0	-	Restart	P	S	T

Hexadecimal, from right to left,

First digit： Bus failure detection

0：Disabled，

1：Enabled

Second digit： Origin completion memory setting at absolute system

0：Not stored；

1：Stored

P09.15	CAN communication configuration 3	Range	Default	Unit	Effective	Control Mode		
		-20 ～+20	0	-	Immediate	P	S	T

- **<u>P17 Group Expansion position control Parameters</u>**

P17.00	External encoder using method	Range	Default	Unit	Effective	Control Mode		
		0 ～ 2	0	-	Restart	P		

0： Position feedback, not using external encoder

1： Taking external encoder as position feedback, external encoder counting increase at motor CCW

2： Taking external encoder as position feedback, external encoder counting increase at motor CW

P17.01	External encoder pitch(32-bit)	Range	Default	Unit	Effective	Control Mode		
		0 ～ 1073741824	10000	-	Restart	P		

Set feedback pulse counts of external encoder per motor revolution:

0 ～ 1073741824

P17.03	Full-closed hybrid deviation threshold(32-bit)	Range	Default	Unit	Effective	Control Mode		
		0 ～ 1073741824	0	-	Immediate	P		

P17.05	Hybrid deviation counting setting	Range	Default	Unit	Effective	Control Mode		
		0 ～100	0	0.01	Restart	P		

P17.06	Hybrid vibration suppression gain	Range	Default	Unit	Effective	Control Mode		
		0 ～30000	400	0. 1/s	Immediate	P		

P17.07	Hybrid vibration suppression time constant	Range	Default	Unit	Effective	Control Mode		
		0 ～30000	0	0.1ms	Immediate	P		

P17.09	Full-closed hybrid deviation external unit(32-bit)	Range	Default	Unit	Effective	Control Mode		
		-1073741824 ～ 1073741824	0	0.1ms	Display only	P		

P17.11	Internal encoder counting external unit(32-bit)	Range	Default	Unit	Effective	Control Mode		
		-1073741824 ～ 1073741824	0	-	Display only	P		

P17.13	External encoder counting value(32-bit)	Range	Default	Unit	Effective	Control Mode		
		-1073741824 ～ 1073741824	0	-	Display only	P		

P17.16	Position comparison output mode	Range	Default	Unit	Effective	Control Mode		
		0000H ～ 0003H	0	-	Restart	P		

Setting range: 0 ～ 3，

0：Disable

1：Forward trigger，

2：Reverse trigger，

3：Bi-directional trigger

“Position comparison” means the comparison between the value of P17. 17 to P17. 23 and P21. 07. “Forward trigger” means the “Absolute position feedback” changes from small to large.

P17.17	First position(32-bit)	Range	Default	Unit	Effective	Control Mode		
		-1073741824 ～ 1073741824	0	-	Immediate	P		

P17.19	2nd position(32-bit)	Range	Default	Unit	Effective	Control Mode		
		-1073741824 ～ 1073741824	0	-	Immediate	P		

P17.21	3rd position(32-bit)	Range	Default	Unit	Effective	Control Mode		
		-1073741824 ～ 1073741824	0	-	Immediate	P		

P17.23	4th position(32-bit)	Range	Default	Unit	Effective	Control Mode		
		-1073741824 ～ 1073741824	0	-	Immediate	P		

P17.25	Effective time 1	Range	Default	Unit	Effective	Control Mode		
		0 ～65535	0	1ms	Immediate	P		

The time to output effective time is 0 ～ 65535ms after 1st position reached.

P17.26	Effective time 2	Range	Default	Unit	Effective	Control Mode		
		0 ～65535	0	1ms	Immediate	P		

The time to output effective time is 0 ～ 65535ms after 1st position reached.

P17.27	Effective time 3	Range	Default	Unit	Effective	Control Mode		
		0 ～65535	0	1ms	Immediate	P		

The time to output effective time is 0 ～ 65535ms after 1st position reached.

P17.28	Effective time 4	Range	Default	Unit	Effective	Control Mode		
		0 ～65535	0	1ms	Immediate	P		

The time to output effective time is 0 ～ 65535ms after 1st position reached.

- **P18 Group Motor Parameters**

P18.00	Motor model code	Range	Default	Unit	Effective	Control Mode		
		0~65535	20060	-	Restart	P	S	T

Naming rule for motor model:

1) Ten thousand's digit represents the series;

2) Thousand's digit represents the inertia: 0-low inertia, 1-medium inertia, 2-high inertia

3) Hundred's digit is reserved;

4)Ten's digit and unit's represents the motor power.

- **P20 Group Panel and Communication Interface Parameters**

P20.00	Panel JOG	Range	Default	Unit	Effective	Control Mode		
		0～2000	0	-	Restart	P	S	T

0～Rated speed of motor

P20.01	Fault reset	Range	Default	Unit	Effective	Control Mode		
		0 ～ 9	0	-	Restart	P	S	T

0: no reset

1: reset

P20.03	Parameter identification function	Range	Default	Unit	Effective	Control Mode		
		0~5	0	-	Restart	P	S	T

0: No operation;

1: Forward-rotation inertia identification;

2: Reverse-rotation inertia identification

3: Reserved;

4: Reserved;

5: Encoder initial angle identification.

P20.05	Analog input automatic offset adjustment	Range	Default	Unit	Effective	Control Mode		
		0~2	0	-	Restart	P	S	T

0: no operation

1: AI1 adjustment

2: AI2 adjustment

P20.06	System initialization function	Range	Default	Unit	Effective	Control Mode		
		0~9	0	-	Restart	P	S	T

0: No operation;

1: Restore factory defaults;

2: Clear fault records;

7: Absolute encoder reset

Other values are reserved.

P20.08	Communication operation instruction input	Range	Default	Unit	Effective	Control Mode		
		0~65535	0	-	Immediate	P	S	T

0: No operation or stop operation;

1~3000: JOG speed, unit is rpm;

1102H: Communication forward JOG;

1103H: Communication reverse JOG;

1300H: Forward-rotation inertia identification;

1301H: Reverse-rotation inertia identification;

1302H: Store inertia identification values;

1500H: Encoder initial angle identification.

P20.09	Communication operation status output	Range	Default	Unit	Effective	Control Mode		
		0~65535	0	-	Display only	P	S	T

0: identification in progress;

1: identification fault;

2: identification completed;

3: identification value store.

P20.11	Multi-stage operation selection by communication	Range	Default	Unit	Effective	Control Mode		
		0~16	0	-	Immediate	P	S	

P20.12	Homing start by communication	Range	Default	Unit	Effective	Control Mode		
		0~1	0	-	Immediate	P		

0: No operation;

1: Homing start.

- **P21 Group Status Parameters**

P21.00	Servo status	Range	Default	Unit	Effective	Control Mode		
		0~65535	0	1us	Display only	P	S	T

P21.01	Motor speed feedback(32-bit)	Range	Default	Unit	Effective	Control Mode		
		-9000~9000	0	1RPM	Display only	P	S	T

P21.03	Speed instruction	Range	Default	Unit	Effective	Control Mode		
		-9000~9000	0	1RPM	Display only	P	S	T

P21.04	Internal torque instruction (relative to rated torque)	Range	Default	Unit	Effective	Control Mode		
		-5000~5000	0	0.1%	Display only	P	S	T

P21.05	Phase current effective value	Range	Default	Unit	Effective	Control Mode		
		0~65535	0	0.01A	Display only	P	S	T

P21.06	DC bus voltage	Range	Default	Unit	Effective	Control Mode		
		0~65535	0	0.1V	Display only	P	S	T

P21.07	Absolute position counter (32-bit)	Range	Default	Unit	Effective	Control Mode		
		-1073741824~1073741824	0	1unit	Display only	P	S	T

P21.09	Electrical angle	Range	Default	Unit	Effective	Control Mode		
		0~65535	0	0.1□	Display only	P	S	T

P21.10	Mechanical angle (relative to encoder zero point)	Range	Default	Unit	Effective	Control Mode		
		0~65535	0	0.1□	Display only	P	S	T

P21.11	Load inertia identification value	Range	Default	Unit	Effective	Control Mode		
		0~65535	0	0.01kg*cm^2	Display only	P	S	T

P21.12	Speed value relative to input instruction	Range	Default	Unit	Effective	Control Mode		
		-9000~9000	0	1RPM	Display only	P	S	T

P21.13	Position deviation counter (32-bit)	Range	Default	Unit	Effective	Control Mode		
		-1073741824~1073741824	0	1p	Display only	P	S	T

P21.15	Input pulse counter (32-bit)	Range	Default	Unit	Effective	Control Mode		
		-1073741824~1073741824	0	1Unit	Display only	P	S	T

P21.17	Feedback pulse counter (32-bit)	Range	Default	Unit	Effective	Control Mode		
		-1073741824~1073741824	0	1p	Display only	P	S	T

P21.19	Position instruction deviation counter unit (32-bit)	Range	Default	Unit	Effective	Control Mode		
		-1073741824~1073741824	0	1Uni t	Display only	P	S	T

P21.21	Digital input signal monitoring	Range	Default	Unit	Effective	Control Mode		
		0~511	0	-	Display only	P	S	T

Display the status of DI to DI9 in real-time.

When the third digit of P07. 21 from the right side is 0 and DI is high level, the panel displays the upper half; When the DI is low level, the panel displays the lower half. It is DI 1 to DI9 from the right to left.

When the third digit of P07. 21 from the right side is 1, represented by binary 1 at high level; represented by binary 0 at low level. DI 1 to DI9 use binary BIT0 to BIT8 respectively.

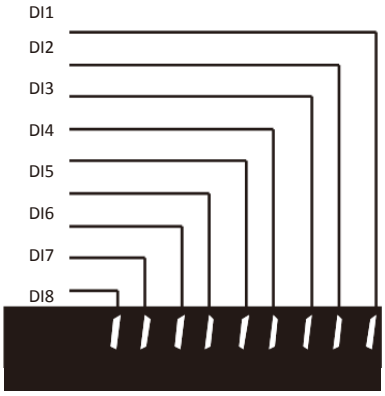

DI terminal output high level display

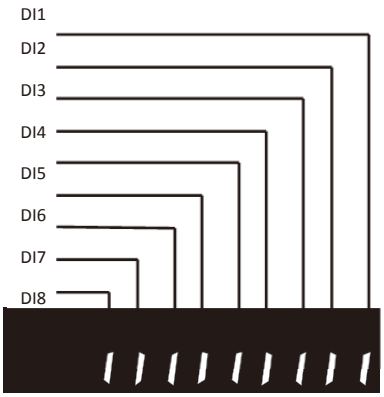

DI terminal output low level display

P21.23	Digital output signal monitoring	Range	Default	Unit	Effective	Control Mode		
		0~511	0	-	Display only	P	S	T

Display the status of DO1 to DO9 in real-time.

When the third digit of P07. 21 from the right side is 0 and DO is high level, the panel displays the upper half; When the DO is

low level, the panel displays the lower half. It is DO 1 to DO9 from the right to left.

When the third digit of P07. 21 from the right side is 1, represented by binary 1 at high level; represented by binary 0 at low level. DO 1 to DO9 use binary BIT0 to BIT8 respectively.

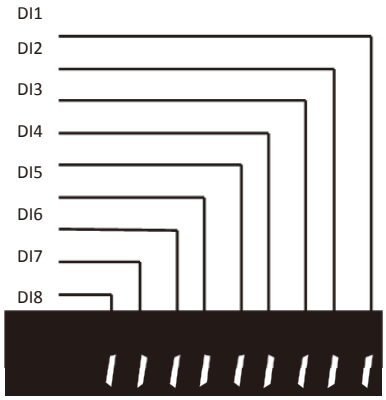

DO terminal output high level display

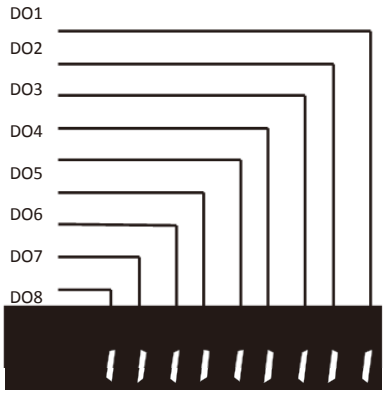

DO terminal output low level display

P21.24	Encoder status	Range	Default	Unit	Effective	Control Mode		
		0 ～65535	0	-	Display only	P	S	T

P21.25	Total power-on time(32-bit)	Range	Default	Unit	Effective	Control Mode		
		0~2147483647	0	0.1s	Display only	P	S	T

P21.27	AI 1 voltage after adjustment	Range	Default	Unit	Effective	Control Mode		
		-32768~32767	0	1mV	Display only	P	S	T

P21.28	AI 2 voltage after adjustment	Range	Default	Unit	Effective	Control Mode		
		-32768~32767	0	1mV	Display only	P	S	T

P21.29	AI 1 voltage before adjustment	Range	Default	Unit	Effective	Control Mode		
		-32768~32767	0	1mV	Display only	P	S	T

P21.30	AI 2 voltage before adjustment	Range	Default	Unit	Effective	Control Mode

		-32768~32767	0	1mV	Display only	P	S	T

P21.31	Module temperature	Range	Default	Unit	Effective	Control Mode		
		0~65535	0	1℃	Display only	P	S	T

P21.32	Number of turns of absolute encoder (32-bit)	Range	Default	Unit	Effective	Control Mode		
		-1073741824~1073741824	0	-	Display only	P	S	T

P21.34	Single turn position of absolute encoder (32-bit)	Range	Default	Unit	Effective	Control Mode		
		-1073741824~1073741824	0	1Uni t	Display only	P	S	T

P21.36	Version code 1	Range	Default	Unit	Effective	Control Mode		
		0~65535	0	0.01	Display only	P	S	T

P21.37	Version code 2	Range	Default	Unit	Effective	Control Mode		
		0~65535	0	0.01	Display only	P	S	T

P21.38	Version code 3	Range	Default	Unit	Effective	Control Mode		
		0~65535	0	0.01	Display only	P	S	T

P21.39	Product series code	Range	Default	Unit	Effective	Control Mode		
		0~65535	0	-	Display only	P	S	T

P21.40	Fault record display	Range	Default	Unit	Effective	Control Mode		
		0 ～ 9	0	-	Immediate	P	S	T

0: Last fault

1: Second-from-last fault

2: Third-from-last fault

…

9: Tenth-from-last fault

P21.41	Fault code	Range	Default	Unit	Effective	Control Mode		
		0 ～ 65535	0	-	Display only	P	S	T

P21.42	Time stamp upon selected fault (32-bit)	Range	Default	Unit	Effective	Control Mode		
		0~2147483647	0	0.1s	Display only	P	S	T

Total power-on time upon fault.

P21.44	Motor speed upon selected fault	Range	Default	Unit	Effective	Control Mode		
		-9000~9000	0	1RPM	Display only	P	S	T

P21.45	U-phase current upon selected fault	Range	Default	Unit	Effective	Control Mode		
		0~65535	0	0.01A	Display only	P	S	T

P21.47	DC bus voltage upon selected fault	Range	Default	Unit	Effective	Control Mode		
		0~65535	0	0.1V	Display only	P	S	T

P21.48	Input terminal status upon selected fault	Range	Default	Unit	Effective	Control Mode		
		0~511	0	-	Display only	P	S	T

P21.49	Output terminal status upon selected fault	Range	Default	Unit	Effective	Control Mode		
		0~511	0	-	Display only	P	S	T

P21.51	Accumulative load ratio	Range	Default	Unit	Effective	Control Mode		
		0~500	0	1%	Display only	P	S	T

P21.52	Regenerative load ratio	Range	Default	Unit	Effective	Control Mode		
		0~500	0	1%	Display only	P	S	T

P21.53	Internal warning code	Range	Default	Unit	Effective	Control Mode		
		0~65535	0	-	Display only	P	S	T

P21.54	Internal instruction present stage code	Range	Default	Unit	Effective	Control Mode		
		0~99	0	-	Display only	P	S	T

P21.55	Customized product serial code	Range	Default	Unit	Effective	Control Mode		
		0~65535	-	N/A	Display only	P	S	T

P21.56	High 32 place value of absolute position counter	Range	Default	Unit	Effective	Control Mode		
		-1073741824~1073741824	-	N/A	Display only	P	S	T

This is applicable when absolute position is 64-bit (32bit+32bit)

P21.58	High 32 place value of feedback pulse counter (32-bit)	Range	Default	Unit	Effective	Control Mode		
		-1073741824~1073741824	-	N/A	Display only	P	S	T

This is applicable when feedback pulse is 64-bit (32bit+32bit)

8. Gain tuning

8.1 Gain tuning introductions

A good servo system is steady, fast and accurate. It can execute position, speed and torque instructions without delay. It is therefore necessary to adjust gains of the servo drives. See example below:

	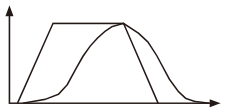	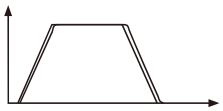	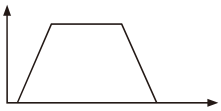
Gains setting grade	Low	High	High, with feedforward
Position loop gain (1/s)	20.0	100.0	100.0
Speed loop gain (Hz)	50	50	50
Speed loop integral time	50	50	50
Speed feedforward	0	0	50.0
Load ratio	1.00	1.00	1.00

After confirming the compatibility of servo drive and servo motor, user can follow procedures below for gain tuning:

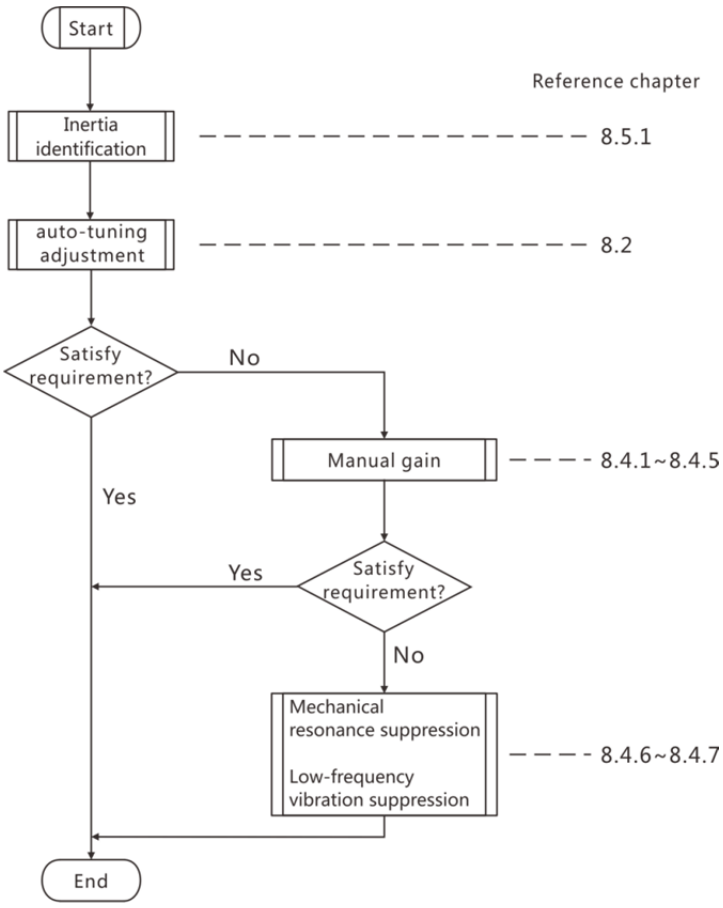

Figure 8.2 Gain tuning procedures

8.2 Automatic gain tuning (auto-tuning)

8.2.1 Function descriptions

Automatic gain tuning (auto-tuning) means servo drive can generate a group of gain parameters matching the load through P0.03 (stiffness grade setting). Before initialing auto-tuning, user should first conduct load inertia identification (auto or manual). There are mainly two type of auto-tuning. Standard auto-tuning (P0.02=1) is suitable for speed and torque control. Positioning mode with gain switchover (P0.02=2) is suitable for position control.

Depending on load, below are some recommended values of P0.03:

5~8: machines with sophisticated transmissions;

9~14: systems with belts or cantilever beams;

15~20: systems with ball screws, pinions and racks or direct driving.

The procedures for auto-tuning is illustrated below:

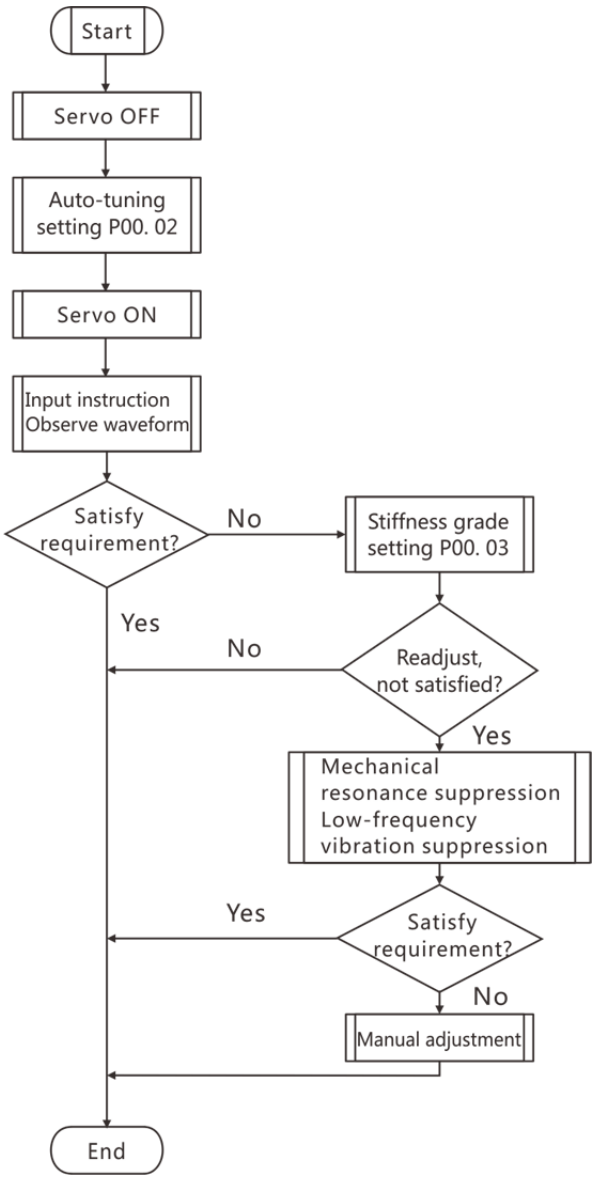

Figure 8.3 Auto-tuning procedures

Relevant parameters:

P00	02	Real time auto-tuning	0: Invalid; 1: Standard auto-tuning 2: Positioning mode	1	0	Immediate	Set at stop	PST
P00	03	Stiffness grade setting	0~31	1	12	Immediate	Set at operation	PST
P00	04	Load inertia ratio	0~60.00	0.01	1.00	Immediate	Set at operation	PST

Therese parameters are updated automatically based on stiffness grade settings:

Parameter		Description	Setting range	Unit	Update
P01	00	Position loop gain 1	1. 0 1/s～2000. 0 1/s	0. 1 1/s	Automatic
P01	01	Speed loop gain 1	1. 0Hz～2000. 0Hz	0.1Hz	Automatic
P01	02	Speed loop integral time 1	0. 15ms～512. 00ms	0.01ms	Automatic

P01	04	Torque instruction filter 1	0. 00ms～100. 00ms	0.01ms	Automatic
P01	05	Position loop gain 2	1. 0 1/s～2000. 0 1/s	0. 1 1/s	Automatic
P01	06	Speed loop gain 2	1. 0Hz～2000. 0Hz	0.1Hz	Automatic
P01	07	Speed loop integral time 2	0. 15ms～512. 00ms	0.01ms	Automatic
P01	09	Torque instruction filter 2	0. 00ms～100. 00ms	0.01ms	Automatic

These parameters are set to be fixed values:

Parameter		Description	Setting range	Unit	Reference value
P01	03	Speed detection filter 1	0. 00ms～100. 00ms	0. 01ms	0. 00ms
P01	08	Speed detection filter 2	0. 00ms～100. 00ms	0. 01ms	0. 00ms
P01	12	Speed feedforward gain	0. 0%～100. 0%	0.1%	30. 0%
P01	13	Speed feedforward filtering time	0. 00ms～64. 00ms	0.01ms	0. 50ms
P01	15	Torque feedforward gain	0. 0%～100. 0%	0.1%	0. 0%
P01	16	Torque feedforward filtering time	0. 00ms～64. 00ms	0.01ms	0. 00ms

These parameters are updated on conditions:

Parameter		Description	Description	Unit	Reference value
P01	18	Position control switchover mode	0：Gain 1 fixed 1：Gain 2 fixed 2：Via DI input（GAIN-SWITCH） 3：Torque instruction is large 4：Speed instruction changes sharply 5：Speed instruction is large 6：Position deviation is large（P) 7：With position instruction（P) 8：Positioning not completion（P) 9：Actual speed is large（P) 10：With position instruction + actual speed（P)	1	10
P01	19	Position control gain switchover delay	0~1000. 0ms	0.1ms	5. 0ms
P01	20	Position control gain switchover grade	0~20000	1	50
P01	21	Position control gain switchover hysteresis	0~20000	1	33
P01	22	Position control gain switchover time	0~1000. 0ms	0.1ms	3. 3ms

8.3 Adaptive filtering

Adaptive filtering means during operation, the servo drive can analyze the resonance frequency based on motor feedback and adjust notch filter parameters accordingly to reduce vibrations. This function is only applicable to position control and speed control, and the motor is in normal operation state (without speed limit, torque limit, over-travel or position deviation clearance).

In addition, adaptive filtering could be invalid if:

- Resonance frequency is lower than 3 times speed response frequency;
- Resonance peak value is low, or gain is low which makes resonance effects are negligible to control performance;
- There are more than 3 resonance points;
- Motor speed changes rapidly due to non-linear mechanical factors;
- Rapid accelerations over 30000rpm/s.

Procedures of adaptive filtering:

- Set P02.02 to 1, 2 or 3 and run the servo;
- The servo drive will detect resonance points which can be display in parameters P02.31 to P02.36;
- Set P02.02=1 and 3rd notch filter will work. Check is vibrations are suppressed and if so, set P02.02=0;
- If vibrations still occur, set P02.02=2 and both 3rd & 4th notch filters will work. Check is vibrations are suppressed and if so, set P02.02=0;
- If there are still some vibrations, adjust parameters of 1st & 2nd notch filters manually.

Relevant parameters:

Parameter		Description	Range	Smallest unit	Factory setting
P02	02	Adaptive filter mode	0: Adaptive invalid, 3rd & 4th filters are functioning but parameters are not updated; 1: Only 3rd filter is functioning with updated parameters; 2: 3rd & 4th filters are functioning with updated parameters; 3: Resonance frequency testing, but parameters are not updated; 4: Clear adaptive records, 3rd & 4th filters are not functioning.	1	0
P02	31	Resonance point 1 frequency	50～5000Hz	1Hz	Display parameter
P02	32	Resonance point 1 bandwidth	0~20	1	Display parameter
P02	33	Resonance point 1 amplitude	0~99	1	Display parameter
P02	34	Resonance point 2 frequency	50～5000Hz	1Hz	Display parameter
P02	35	Resonance point 2 bandwidth	0~20	1	Display parameter
P02	36	Resonance point 2 amplitude	0~99	1	Display parameter

Therese parameters are updated automatically:

P02	10	Third notch filter frequency	50～5000Hz	1Hz	5000Hz
P02	11	Third notch filter width	0~20	1	2
P02	12	Third notch filter depth	0~99	1	0
P02	13	Fourth notch filter frequency	50～5000Hz	1Hz	5000Hz
P02	14	Fourth notch filter width	0~20	1	2

P02	15	Fourth notch filter depth	0~99	1	0

8.4 Manual gain tuning

8.4.1 Introduction

X3E series servo auto-tuning is sufficiently functioning for most applications however for some sophisticated loads, auto-tuning may not yield the best performance and user needs to adjust gain parameters manually. When doing manual tuning, user can use Servostudio software to monitor response curves which can be the guidance for adjusting parameters.

8.4.2 Position control tuning

Procedures:

1. Set P00.04 (load inertia ratio) automatically (by load inertia identification) or manually.
2. Initialize parameters below to factory defaults:

P01	00	Position loop gain 1	40.0 1/s	P02	04	First notch filter frequency (manual)	5000
P01	01	Speed loop gain 1	20. 0HZ	P02	07	Second notch filter frequency (manual)	5000
P01	02	Speed loop integral time 1	30. 00ms	P02	10	Third notch filter frequency	5000
P01	03	Speed detection filter 1	0. 00ms	P02	13	Fourth notch filter frequency	5000
P01	04	Torque instruction filter 1	1. 00ms	P02	19	Position instruction FIR filter 2	0
P01	05	Position loop gain 2	40.0 1/s	P02	20	First vibration attenuation frequency	0
P01	06	Speed loop gain 2	20. 0HZ	P02	22	Second vibration attenuation frequency	0
P01	07	Speed loop integral time 2	30. 00ms	P01	18	Position control gain switchover mode	0
P01	08	Speed detection filter 2	0. 00ms	P01	23	Position control gain switchover time	0
P01	09	Torque instruction filter 2	1. 00ms	P01	27	Torque control gain switchover mode	0
P01	10	Speed regulator PDFF coefficient	100. 0%	P01	12	Speed feedforward gain	0
P02	00	Position instruction smoothing filter	0	P01	13	Speed feedforward filtering time	0
P02	01	Position instruction FIR filter	0				
P00	02	Real time auto-tuning	0				
P02	02	Adaptive filtering mode	0				

3. Target value of gain parameters:

Parameter		Descriptions	Target	Remarks
P01	00	Position loop gain 1	50.0 1/s	If positioning time is too long, increase P01.00. Otherwise reduce it.

P01	01	Speed loop gain 1	30Hz	If there are no noises, vibrations or overshoots, increase P01.01. Otherwise reduce it.
P01	02	Speed loop integral time 1	25. 00ms	If user reduces this value, positioning time will be shortened but may cause vibrations. If this value is too large, position deviation may not be able to converge to 0.
P01	04	Torque instruction filter 1	0.5ms	Increase this parameter if there are vibrations. This parameter is positively related to P01.02.
P01	12	Speed feedforward gain	30%	To use feedforward, fist set P01.11=1. If there are no noises or vibrations, increase P01.12. This can reduce real-time position deviations. If input instructions are inhomogeneous, increase the value of P01.13.

8.4.3 Speed control tuning

Speed control tuning is similar to position control tuning except for P01.00, P01.05, P01.12 and P01.13, which are for position control only.

8.4.4 Gain switchover function

Gain switchover function has effects below:

- Suppress vibrations at stop and enhance servo dynamic response following performances;
- Shorten positioning time;
- Switchover by external signals.

Figure 8.4 Gain switching example

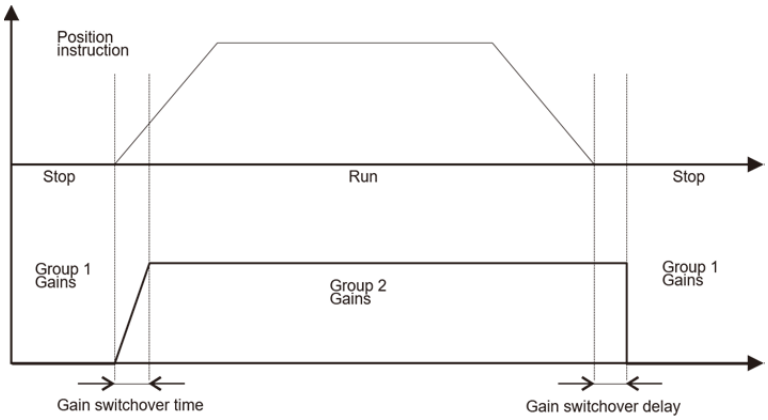

Procedures

1. Adjust Group 1 gains manually without gain switching function;
2. Copy Group 1 parameter settings to Group 2;
3. Set gain switchover conditions. For example set P01.18=7 for position control; also adjust P01.19~P01.22 if necessary (can use defaults);
4. When instruction stops, reduce P01.01 (Speed loop gain 1) and slightly increase P01.04 (Torque instruction filter 1) so as to reduce noises and vibrations at stop.

Gain switchover (from Group 1 to Group 2) conditions

	Switchover conditions P01.18, P01.23, P01.27	Mode	Chart No.	Switchover delay P01.19, P01.24, P01.28	Switchover grade P01.20, P01.25, P01.29	Switchover hysteresis P01.21, P01.26, P01.30
0	Group 1 gains (fixed)	PST		Not applicable	Not applicable	Not applicable
1	Group 2 gains (fixed)	PST		Not applicable	Not applicable	Not applicable
2	Use GAIN_SEL signal	PST		Not applicable	Not applicable	Not applicable
3	Torque instruction	PST	A	Applicable	Applicable (%)	Applicable (%)
4	Speed instruction variation	S	B	Applicable	Applicable (10rpm/s)	Not applicable
5	Speed instruction	PS	C	Applicable	Applicable (1rpm/s)	Applicable (1rpm/s)
6	Position deviation	P	D	Applicable	Applicable (1 unit)	Applicable (1 unit)
7	Position instruction	P	E	Applicable	Not applicable	Not applicable
8	Positioning completion	P	F	Applicable	Not applicable	Not applicable
9	Speed feedback	P	C	Applicable	Applicable (1rpm/s)	Applicable (1rpm/s)
10	Position completion & speed feedback	P	G	Applicable	Applicable (1rpm/s)	Applicable (1rpm/s)

Notes:

- Please refer to Figure 8.5 Gain Switchover Sequence Charts for chart No.;
- When using GAIN_SEL please refer to P01.17 settings (P/PI or Group 1/Group switchover);
- Delay time is only effective for switching from Group 2 back to Group 1;
- If P0.18=10, relevant parameter definitions are different from other modes.

Figure 8.5 Gain Switchover Sequence Charts

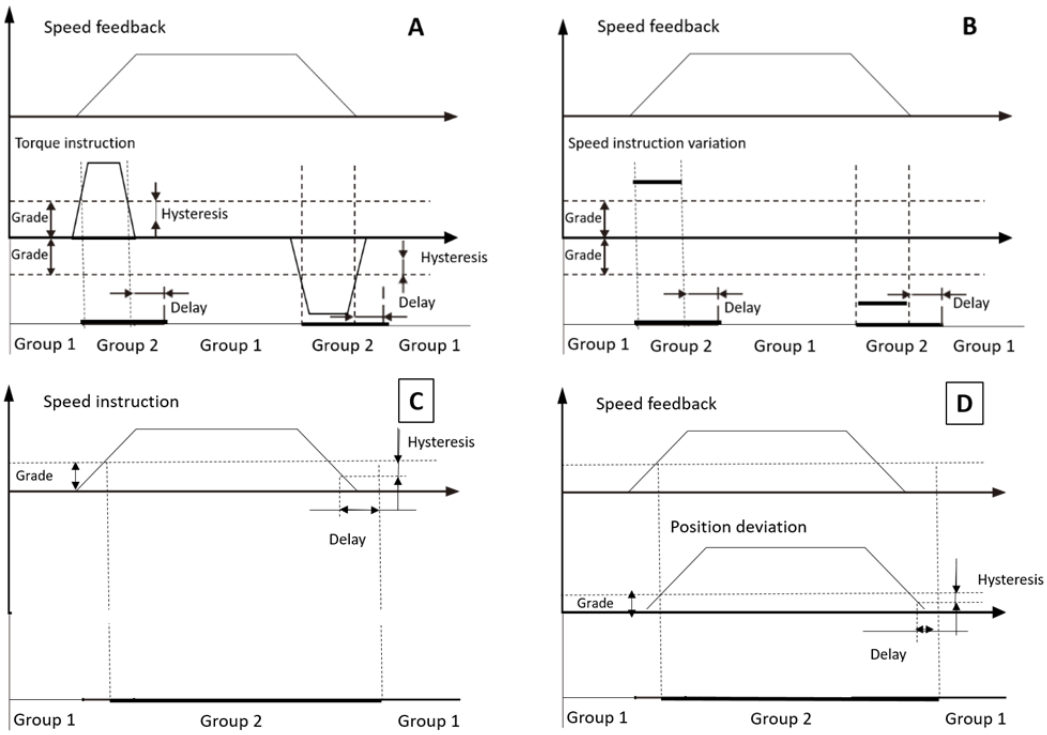

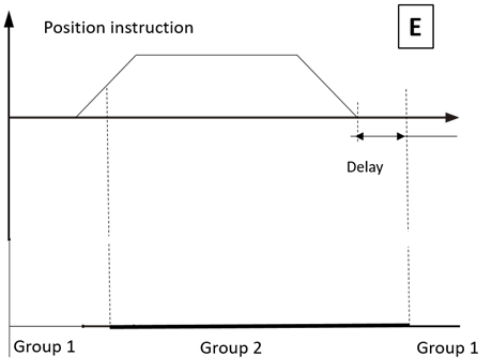

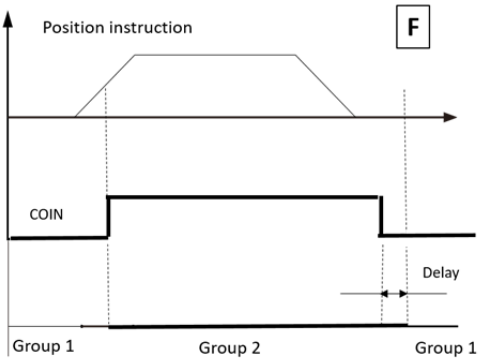

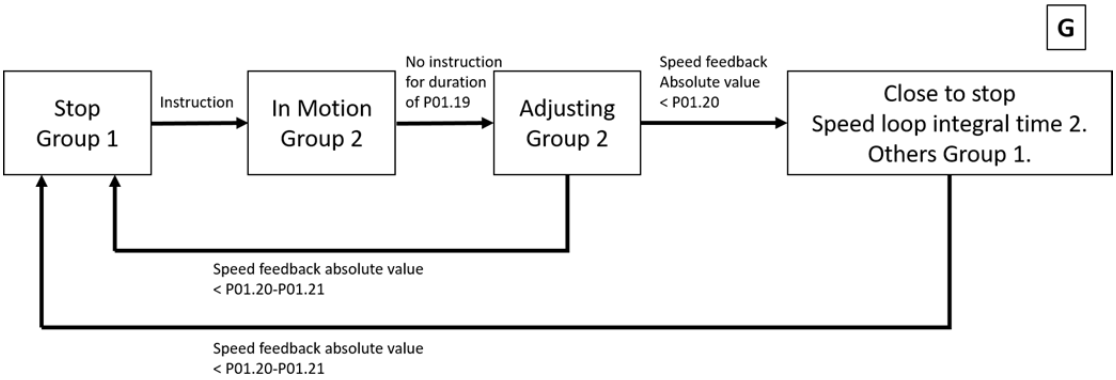

8.4.5 Feedforward function

In position control, actual speed control instruction is the composite of speed instruction regulated by feedback and speed feedforward which is calculated from position instructions. Compared with a system which only utilized feedback control, feedforward system can reduce real-time position deviations and enhance system responsive characteristics. The larger speed feedforward is, the smaller position deviation is. Theoretically, when speed feedforward is 100%, position deviation can be 0. See formula below:

Position Deviation = (Position Instruction Speed/Position Loop Gains) * (100% - Speed Feedforward Gain)

Similarly in speed control, actual torque control instruction is the composite of torque instruction regulated by feedback and torque feedforward which is calculated from speed instructions. Compared with a system which only utilized feedback control, feedforward system can reduce real-time speed deviations and enhance system responsive characteristics. In position control, torque feedforward can reduce position deviations during constant acceleration period, however P00.04 must be set correctly.

If feedforward gain is too large, system may suffer from overshoot, vibrations or noises. To adjust feedforward under such circumstances, user can reduce feedforward gain or increase feedforward filtering time.

Relevant parameters:

Parameter	Description	Range	Smallest unit	Factory setting

P01	11	Speed feedforward control selection	0: no speed feedforward 1: internal speed feedforward	1	0
P01	12	Speed feedforward gain	0.0%~100.0%	0. 1%	30. 0%
P01	13	Speed feedforward filtering time	0.00ms~64.00ms	0. 01ms	0. 50ms
P01	14	Torque feedforward control selection	0: no torque feedforward 1: internal torque feedforward 2: use TFFD as torque feedforward input	1	0
P01	15	Torque feedforward gain	0.0%~100.0%	0. 1%	0. 0%
P01	16	Torque feedforward filtering time	0.00ms~64.00ms	0. 01ms	0. 00ms

Torque feedforward source can be external analog input from upper controllers. To do this, set P01.14=2 and set relevant parameters in analog input.

8.4.6 Mechanical resonance suppression

Mechanical systems has certain resonance frequencies. When servo gain increases, resonances might be caused around system resonance frequencies and prevent servo gains from further increasing. There are two ways to counter resonances:

1. Torque instruction filters (P01.04, P01.09)

   Torque instruction filter is a low-pass digital filter which can reduce resonances by attenuating torque instruction frequencies around or above cut-off frequencies through settings of filtering time.

   Filter cut-off frequency = 1000 / (2π * Torque instruction filter)

2. Notch filters

   Notch filter is a band-stop digital filter. HCFA X3E servo drive has 4 groups of notch filters including both manual and adaptive filters. For adaptive filtering, refer to 8.3.

Parameter		Description	Range	Smallest unit	Factory setting
P02	04	1st notch filter frequency(manual)	50～5000Hz	1Hz	5000Hz
P02	05	1st notch filter width	0～20	1	2
P02	06	1st notch filter depth	0～99	1	0
P02	07	2nd notch filter frequency(manual)	50～5000Hz	1Hz	5000Hz
P02	08	2nd notch filter width	0～20	1	2
P02	09	2nd notch filter depth	0～99	1	0
P02	10	3rd notch filter frequency	50～5000Hz	1Hz	5000Hz
P02	11	3rd notch filter width	0～20	1	2
P02	12	3rd notch filter depth	0～99	1	0
P02	13	4th notch filter frequency	50～5000Hz	1Hz	5000Hz
P02	14	4th notch filter width	0～20	1	2
P02	15	4th notch filter depth	0～99	1	0

Figure 8.6 Notch filter characteristics

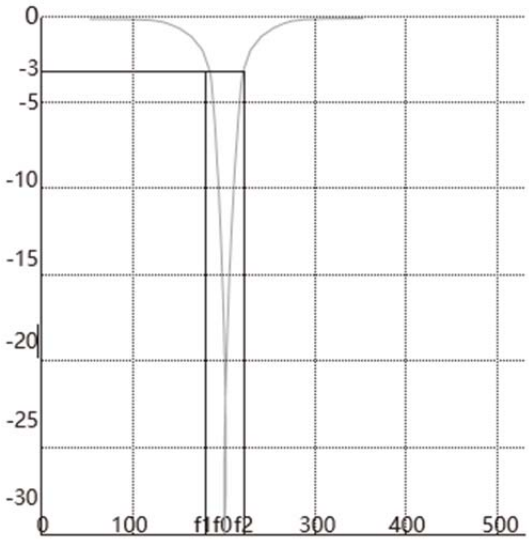

Notch filter frequency is f0. Notch filter width Kw = (f2-f1) / f0.

Figure 8.7 Notch filter depth is 1 or 0

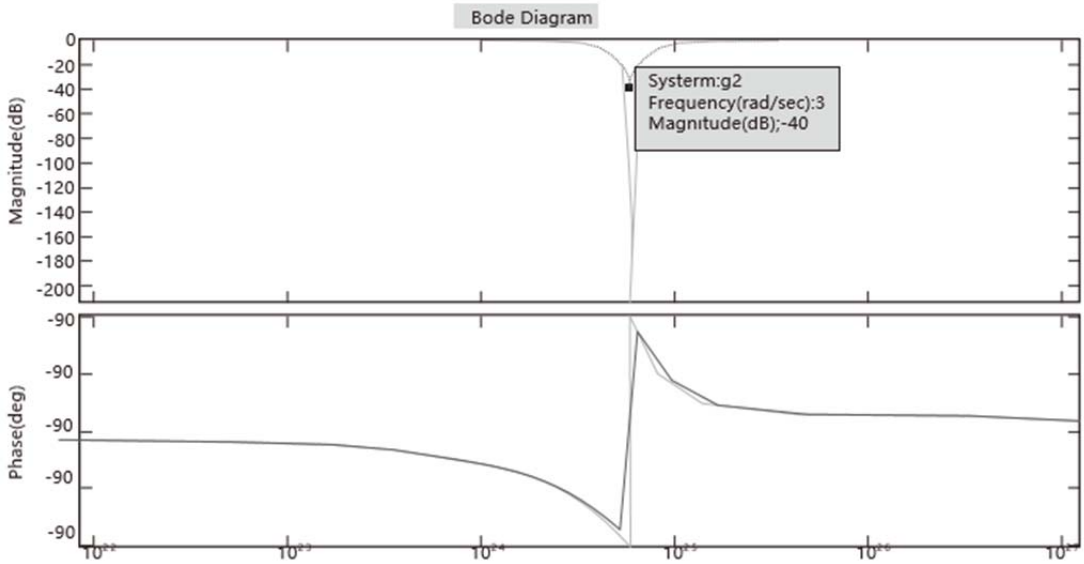

Figure 8.8 Notch filter in servo control

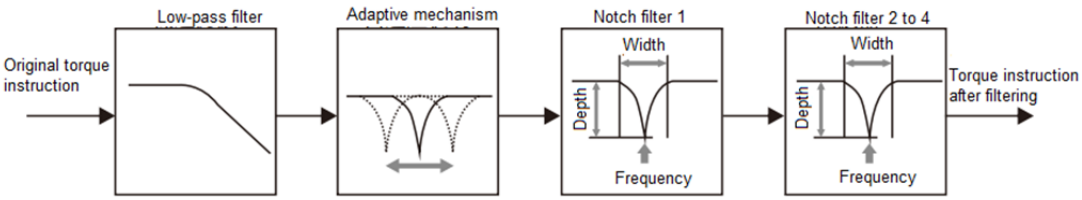

8.4.7 Low frequency vibration suppression

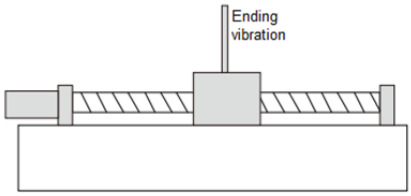

When the load is stopping during positioning, if its ending is too long, the ending might vibrate at low frequency and causes periodic vibrations in positioning. In such situations, please observe waveforms triggered by position instructions through Servostudio software and calculate low frequency vibration frequency and attenuation coefficient (A1 / A0) and set parameters in P02.20 & P02.21. Then observe the waveform again and of low frequency vibration still occurs, set parameters in P02.22 & P02.23. Refer to figure below:

Figure 8.8 Low frequency vibration waveform

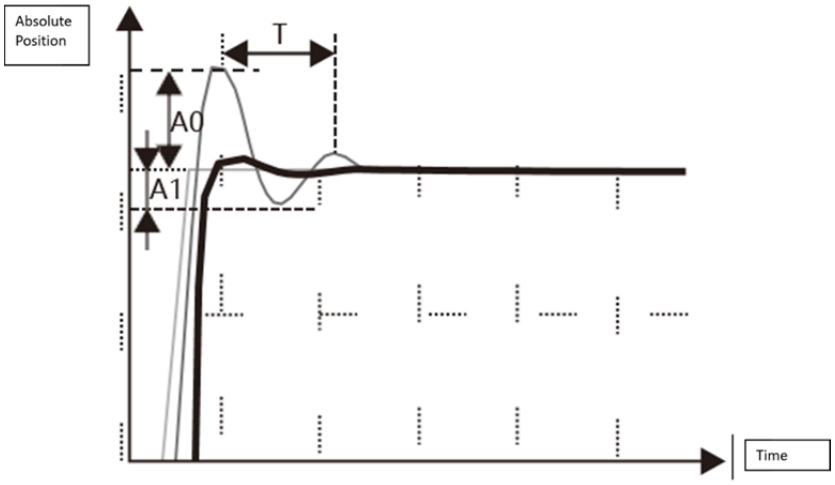

Related parameters:

Parameter		Description	Range	Smallest unit	Factory setting
P02	20	1st damping frequency	10. 0HZ~100. 0HZ	0. 1Hz	0. 0Hz
P02	21	1st damping filter setting	0~1. 0	0. 1	0
P02	22	2ndt damping frequency	10. 0HZ~100. 0HZ	0. 1Hz	0. 0Hz
P02	23	2nd damping filter setting	0~1. 0	0. 1	0

9. Fault protections and alarms

9.1 List of errors and alarms

Code	Description	Stop mode	Reset (Y/N)	Record memory
Err.001	System parameter abnormal	Stop immediately	N	No memory
Err.002	Product model selection fault	Stop immediately	N	No memory
Err.003	Fault during parameter storage	Stop immediately	N	No memory
Err.004	FPGA fault	Stop immediately	N	No memory
Err.005	Product matching fault	Stop immediately	N	No memory
Err.006	Program abnormal	Stop immediately	N	No memory
Err.007	Encoder initialization abnormal	Stop immediately	N	Memory
Err.008	Short circuit to ground detection fault	Stop immediately	N	Memory
Err.009	Overcurrent fault A	Stop immediately	N	Memory
Err.010	Overcurrent fault B	Stop immediately	Y	Memory
Err.012	Incremental encoder Z breakage or absolute encoder number of turns abnormal	Stop immediately	Y	Memory
Err.013	Encoder communication abnormal	Configurable	Y	Memory
Err.014	Encoder data abnormal	Configurable	Y	Memory
Err.015	Encoder battery undervoltage	Stop immediately	N	Memory
Err.016	Speed deviation too large	Configurable	Y	Memory
Err.017	Torque saturation overtime	Configurable	Y	Memory
Err.018	Control power undervoltage	Configurable	Y	Memory
Err.019	Tripping error	Configurable	Y	Memory
Err.020	Overvoltage	Stop immediately	Y	Memory
Err.021	Undervoltage	Decelerate to stop	Y	Configurable
Err.022	Current sampling fault	Stop immediately	Y	Memory
Err.023	AI sampling voltage too large	Stop immediately	Y	Memory
Err.024	Overspeed	Stop immediately	Y	Memory
Err.025	Electrical angle identification failure	Stop immediately	Y	No memory
Err.026	Load identification failure	Stop immediately	Y	No memory
Err.027	DI parameter setting fault	Stop immediately	Y	No memory
Err.028	DO parameter setting fault	Stop immediately	Y	No memory
Err.040	S-ON instruction invalid fault	Configurable	Y	No memory
Err.042	Pulse division output overspeed	Configurable	Y	Memory
Err.043	Position deviation too large	Configurable	Y	Memory
Err.044	Main circuit input phase loss	Configurable	Y	Memory
Err.045	Drive output phase loss	Configurable	Y	Memory
Err.046	Drive overload	Configurable	Y	Memory
Err.047	Motor overload	Configurable	Y	Memory
Err.048	Electronic gear setting fault	Configurable	Y	No memory

Err.049	Heat sink too hot	Configurable	Y	Memory
Err.050	Pulse input abnormal	Configurable	Y	Memory
Err.051	Full-closed loop position deviation too large	Configurable	Y	Memory
Err.054	User forced fault	Decelerate to stop	Y	Memory
Err.055	Absolute position resetting fault	Configurable	Y	Memory
Err.056	Main circuit outage	Decelerate to stop	Y	Memory
Err.060	First start after writing customized software	Stop immediately	N	Configurable
Err.065	CAN bus off	Configurable	Y	Memory
Err.066	Abnormal NMT instruction	Configurable	Y	Memory
Err.067	CAN bus failure	Decelerate to stop	Y	Memory
Err. 068	External overspeed(reserved)	Stop immediately	Y	Memory
Err. 069	Hybrid deviation too large	Configurable	Y	Memory
Err. 071	Node protection or heartbeat timeout	Configurable	Y	Memory
Err. 072	Synchronization failure	Configurable	Y	Memory
Err. 073	CANOpen track buffer underflow	Configurable	Y	Memory
Err. 074	CANOpen track buffer overflow	Configurable	Y	Memory
AL.080	Undervoltage warning	No stop	Y	No memory
AL.081	Drive overload warning	No stop	Y	Memory
AL.082	Motor overload warning	No stop	Y	Memory
AL.083	Parameter modification needs power restart	No stop	Y	No memory
AL.084	Servo not ready	No stop	Y	No memory
AL.085	EEPROM frequency writing warning	No stop	Y	No memory
AL.086	Positive over-travel warning	No stop	Y	No memory
AL.087	Negative over-travel warning	No stop	Y	No memory
AL.088	Positive instruction overspeed	No stop	Y	No memory
AL.090	Absolute encoder angle initialization warning	No stop	Y	Memory
AL.093	Regenerative overload	No stop	Y	Memory
AL.094	Regenerative resistor too small	No stop	Y	No memory
AL.095	Emergency stop	Decelerate to stop	Y	No memory
AL.096	Homing error	Decelerate to stop	Y	No memory
AL.097	Encoder battery undervoltage	No stop	Y	No memory

9.2 Troubleshooting

Code	Description	Causes	Troubleshooting measures
Err.001	System parameter abnormal	1. Control circuit power suddenly drops; 2. After updating servo software, some previously saved parameters exceed settings range.	1. Make sure input power is within specified range; 2. Set P20.06=1 to initialized system parameters.
Err.002	Product model selection fault	1. Encoder cable connection broken or loose; 2. Invalid drive or motor model.	1. Check and fasten encoder cable; 2. Replace with valid drive or motor model.

Err.003	Fault during parameter storage	1. Parameter reading/writing too frequent; 2. Parameter storage component fault; 3. Control circuit power unstable; 4. Drive fault.	1. Check if upper controller is reading/writing E2PROM too frequent; 2. Check control circuit power cable and ensure control circuit power voltage is within specified range.
Err.004	FPGA fault	Software version fault.	Check if software version is correct.
Err.005	Product matching fault	1. Encoder cable connection broken or loose; 2. Use third-party encoder which is not supported; 3. Motor capacity and drive capacity don't match. Motor capacity class is larger than or two levels off the drive; 4. Product model code doesn't exist.	1. Check and fasten encoder cable; 2. Replace products that don't match; 3. Choose correct encoder type or replace the drive.
Err.006	Software abnormal	1. System parameter abnormal; 2. Drive internal fault.	Set P20.06=1 to initialized system parameters and restart power.
Err.007	Encoder initialization abnormal	Encoder signal abnormal at power on.	Check or replace encoder cable.
Err.008	Short circuit to ground detection fault	1. UVW wiring fault; 2. Motor breakdown; 3. Drive fault.	1. Check if UVW is short circuited to ground. If so replace cable; 2. Check if motor cable or grounding resistance is abnormal. If so replace the motor.
Err.009	Overcurrent fault 1	1. Instruction input is too fast; 2. Regenerative resistor too small or short circuited; 3. Motor cable bad contact; 4. Motor cable grounding; 5. Motor UVW short circuited; 6. Motor burnt; 7. Software detected power transistor overcurrent	1. Check instruction input time sequence and input after S-RDY; 2. Replace regenerative resistor; 3. Check and fasten encoder cable; 4. Replace motor if UVW insulation resistor is broken; 5. Check if UVW is short circuited; 6. Replace motor if UVW don't have equal resistance; 7. Reduce load, use bigger drive and motor, increase acceleration/deceleration time.
Err.010	Overcurrent fault 2	Same as Err.009	Same as Err.009
Err.012	Incremental encoder Z breakage or absolute encoder number of turns abnormal	Incremental encoder: Z-phase signal loss due to cable breakage or encoder fault; Absolute encoder: battery shortage, encoder cable plugging & unplugging during power off, or after P06.47=1 not initialize the encoder.	1. Rotate motor shaft manually, if error still occurs, replace cable or encoder; 2. Replace battery if undervoltage; 3. P20.06=7 and initialize.
Err.013	Encoder communication	1. Communicational encoder cable breakage;	1. Check or replace encoder cable; 2. Check if encoder is grounded properly.

	abnormal	2. Encoder not grounded; 3. Communication verification abnormal.	
Err.014	Encoder data abnormal	1. Serial encoder breakage or bad contact; 2. Serial encoder data reading/writing abnormal	Check or replace encoder cable.
Err.015	Encoder battery undervoltage	Encoder battery voltage is less than P06.48 and ten's place of P06.47 is 1.	Replace encoder battery.
Err.016	Speed deviation too large	Speed instruction and speed feedback deviation exceeds settings of P06.45.	1. Increase P06.45 value; 2. Increase acceleration/deceleration time or increase system responsiveness; 3. Set P06.45=0 to disable speed deviation too large function.
Err.017	Torque saturation overtime	Torque maintains saturated for time longer than settings of P06.46.	1. Increase P06.46 value; 2. Check if UVW is broken.
Err.018	Control power undervoltage	Poor input wiring or input power failure	1. Check input power and wiring 2. Replace driver
Err.019	Tripping error	Motor stall due to incorrect wiring	1. Check UVW and encoder wiring 2. Check drive and motor
Err.020	Overvoltage	1. Input power voltage exceeds 280VAC; 2. Regenerative resistor breakage or not matching; 3. Load inertia exceeds allowable range; 4. Drive broken.	1. Check input power voltage; 2. Check or replace regenerative resistor; 3. Increase acceleration/deceleration time or replace more suitable drive/motor.
Err.021	Undervoltage	1. Input power voltage drops; 2. Instantaneous power off; 3. P06.36 setting is too high; 4. Drive broken	1. Make sure input power is stable; 2. Reduce P06.36 value if input power is normal. (Memory is configurable by P07.19)
Err.022	Current sampling fault	Drive internal current sampling fault.	Replace servo drive.
Err.023	AI sampling voltage too large	1. AI wrong wiring; 2. AI external input power voltage too high	Do correct AI wiring and set input power voltage within ±10V.
Err.024	Overspeed	1. Speed instruction exceeds maximum speed setting value; 2. Wrong UVW phase sequence; 3. Speed response over modulation; 4. Drive faulty	1. Lower speed instruction 2. Check if UVW phase sequence is correct; 3. Adjust speed loop gains to reduce over shoot; 4. Replace drive
Err.025	Electrical angle identification failure	1. Load or inertia too large; 2. Wrong encoder cable wiring	1. Reduce load or increase current loop gains 2. Replace encoder cable.
Err.026	Load identification failure	1. Load or inertia too large. Motor cannot run at specified curves; 2. Verification process aborted by other	1. Reduce load or increase current loop gains 2. Make sure verification process correct.

		faults.	
Err.027	DI parameter setting fault	1. Different DOs are assigned with same function; 2. Physical DI and communicational DI have definition conflicts	Reassign DI functions
Err.028	DO parameter setting fault	Different DOs are assigned with same function	Reassign DO functions
Err.040	S-ON instruction invalid fault	Input S-ON signal after motor is energized by other auxiliary functions	
Err.042	Pulse division output overspeed	Pulse division output is over upper limit.	Adjust pulse division output settings.
Err.043	Position deviation too large	1. Servo motor UVW wiring is wrong; 2. Servo drive gain settings are too low; 3. Position instruction pulse frequency is too high; 4 Position instruction acceleration is too large; 5. P00.19 setting is too low; 6. Servo drive/motor faulty; 7. Brake release abnormal. Motor is locked by external forces, gravity etc.	1. Reconnect the cables 2. Increase servo gains 3. Reduce instruction frequency, acceleration or adjust gear ratio 4. Set up smoothing parameters; 5. Adjust the value of P00.19 6. Replace the drive 7. Check brake power and servo motor is not blocked.
Err.044	Main circuit input phase loss	1. Input power cable bad contact; 2. Phase loss fault, i.e. during power on, one phase of R/S/T is too low for over 1s. 3. For the drive of 1KW or more, input single 220VAC	1. Check input power cables 2. Measure R/S/T phase-to-phase voltage to ensure 3 phases are balanced and input power is up to standard. 3.Set P06. 30 to 1, disable this alarm
Err.045	Drive output phase loss	1. Motor UVW bad contact; 2. Motor broken	1. Check UVW wiring 2. Replace motor
Err.046	Drive overload	1. Motor UVW or encoder cable bad contact or loose 2. Motor blocked or brake not released 3. Wrong UVW/encoder cable wiring for multiple drives/motors 4. Motor/drive too small for load 5. Phase loss or wrong phase sequence 6. Motor or drive broken	1. Check UVW/encoder cable wiring 2. Check motor is not blocked and brake is released 3. Check there is no wrong UVW/encoder cable wiring for multiple drives/motors 4. Increase acceleration/deceleration time or choose bigger drive/motor 5. Check UVW wiring 6. Replace drive/motor
Err.047	Motor overload	Same as Err.046	Same as Err.046
Err.048	Electronic gear setting fault	Electronic gear ratio exceeds setting range	Set correct electronic gear
Err.049	Heat sink too hot	1. Fan broken 2. Ambient temperature is too high 3. Too many times of restarting power after	1. Check fan. Replace fan or drive 2. Measure ambient temperature and improved cooling conditions for servo

		overload 4. Inappropriate installation directions and spacing 5. Servo drive faulty 6. Motor or drive broken	drive 3. Check error records and see if there has been overload error. Restart after 30s. Increase acceleration/deceleration time. 5. Install the servo drive according to specifications in this manual. 6. Power off and wait for 5 minutes. If this error persists, replace drive.
Err.050	Pulse input abnormal	1. Input pulse frequency is larger than maximum frequency setting 2. Input pulse is interfered.	1. Adjust P06.38 2. Check wiring grounding conditions. Use twisted-pair shielded cable. Separate UVW cable from encoder cable.
Err.051	Fully-closed loop position deviation too large	1. External encoder abnormal. 2. Relative settings too conservative.	1. Check external encoder wirings. Replace external encoder. 2. Check parameters of fully-closed loop deviation and protective functions.
Err.054	User forced fault	User uses DI of function 32 FORCE_ERR to forcibly enter faulty state.	Disconnect DI of function 32.
Err.055	Absolute position resetting fault	Absolute encoder absolute position resetting faulty.	Contact HCFA.
Err.056	Main circuit outage	Power outage or main circuit abnormal	Check if there is instantaneous power failure. Increase power voltage capacity.
Err.060	First start after writing customized software	First start after download customized software to the standard driver	Initialize the servo drive.
Err.065	CAN bus off	CAN bus disconnection or receive or send abnormal	Check wiring and connect again
Err.066	Abnormal NMT instruction	Receive NMT stop or reset instruction at servo -ON	NMT node reset, do not stop or reset CAN node at servo-ON
Err.067	CAN bus failure	CAN bus disconnection or receive or send abnormal	Check wiring and connect again
Err.068	External overspeed(reserved)	1. Speed instruction exceeds maximum speed setting value; 2. Wrong UVW phase sequence; 3. Speed response over modulation; 4. Drive faulty	1. Lower speed instruction 2. Check if UVW phase sequence is correct; 3. Adjust speed loop gains to reduce over shoot; 4. Replace drive
Err.069	Hybrid deviation too large	1.External encoder disconnection 2.External encoder damage 3. Drive error	1. Check or replace external encoder and wiring 2. Check or replace external encoder and wiring 3. Check mechanical drive and repair

Err.071	Node protection or heartbeat timeout	Do not receive any response when node protection and heartbeat monitoring reaches specified time	Check node and NMT node reset
Err.072	Synchronization failure	Synchronization failure with host controller at CANOpen IP modde	NMT node reset or 6040 send failure reset instruction
Err.073	CANOpen track buffer underflow	Synchronous clock lost more than 2 times at CANOpen IP or CSP mode	Check interference in communication and host controller operate normally. NMT node reset or 6040 send failure reset instruction
Err.074	CANOpen track buffer overflow	Synchronization clock goes too fast or the actual clock frequency is inconsistent with setting value in CANOpen IP or CSP mode	Check interference in communication and host controller operate normally. NMT node reset or 6040 send failure reset instruction
AL.080	Undervoltage warning	DC bus voltage is relatively low.	1. Check main circuit. 2. Adjust P06.36
AL.081	Drive overload warning	Same as Err.046	Same as Err.046
AL.082	Motor overload warning	Same as Err.046	Same as Err.046
AL.083	Parameter modification needs power restart	Modify parameters which needs restarting.	Restart power
AL.084	Servo not ready	S-ON when servo is not ready.	S-ON after detecting S-RDY signal.
AL.085	E2PROM frequency writing warning	Operating E2PROM too frequent.	Reduce E2PROM using frequency. Use communication2 which do not save in E2PROM.
AL.086	Positive over-travel warning	1. P_OT & N_OT valid simultaneously 2. Servo over-travel in some directions. Can be removed automatically.	Trigger positive limit switch, check operation mode, move the servo towards negative direction. After leaving positive limit switch, this alarm will be removed automatically.
AL.087	Negative over-travel warning	Same as AL.086	Trigger negative limit switch, check operation mode, move the servo towards positive direction. After leaving negative limit switch, this alarm will be removed automatically.
AL.088	Positive instruction overspeed	1. Electronic gear ratio too large 2. Pulse frequency too high	1. Reduce electronic gear ratio 2. Reduce pulse frequency
AL.090	Absolute encoder angle initialization warning	Angle is over 7.2 degree.	Replace motor
AL.093	Regenerative overload	1. Regenerative resistor wrong wiring or bad contact;	1. Check resistor wiring 2. Check internal resistor wiring;

		2. Internal resistor wiring breakage; 3. Resistor capacity insufficient; 4. Resistor resistance too large and causing long time braking; 5. Input voltage exceeds specifications 6. Resistor resistance, capacity or heating time constant parameters settings are wrong; 7. Drive faulty	3. Increase resistor capacity 4. Reduce resistor resistance; 5. Reduce input voltage 6. Set correct parameters 7. Replace drive
AL.094	Regenerative resistor too small	1. External regenerative resistor is less than minimum value 2. Wrong parameter settings	1. Replace resistor 2. Check parameters P00.21~P00.24
AL.095	Emergency stop	Emergency stop is triggered.	This is a normal DI function (function 30)
AL.096	Homing error	1. Homing time exceeds P08.95 2. P08.90 is set is 3, 4, or 5 and contacted limit switches 3. Contact limit switches twice when not using limit switches as origin points.	1. Increase the value of P08.95; 2. Reduce homing speeds P08.92, P08.93
AL.097	Encoder battery undervoltage	Encoder battery voltage is lower than what's set in P06.48.	Replace battery.

10. Communication

HCFA Modbus communication is explained in figure below:

Figure 10.1 HCFA Modbus

Electrical Specification	EIA485
Communication Type	Asynchronous serial
Communication Speed	2.4~115.2Kbps
Data Bit	8-bit
Verification	0~1bit
Stop Bit	1~2bit
Alarm Detection	CRC16-CCITT
Transfer Data	8-bit binary
Data Length	Below 35 byte

10.1 Communication rules

Parameter addresses are generated by converting decimal to hexadecimal. For example, the address of P08.11 is 080BH.

1. Without encryption, all parameters can be read/written;
2. Some parameters are not editable during operation and error will occur;
3. For 32-bit parameters, both high & low 16-bit must be read/written at the same time;
4. User password can be written by 06H or 10H but this is only inputting password and cannot change password. When reading password, only 0 will be returned. User password needs to be modified manually;
5. When using communication to write parameters, the results are stored in flash memory and not in E2PROM. To write into E2PROM, user needs to add E000H to parameter addresses. For example, 080BH (P08.11) + E000H=E80BH.

10.2 Communication read/write commands

1. Read one or multiple holding registers: 03H. Numbers in below figure are hexadecimal.

Axis address	Modbus command	Register addresses (H)	Register addresses (L)	Register quantity (H)	Register quantity (L)	CRC (L)	CRC (H)
01	03	12	00	00	01	81	72

Response:

Axis address	Modbus command	Data quantity	Data value (H)	Data value (L)	CRC (L)	CRC (H)
01	03	02	00	3C	B8	55

2. Write single holding register: 0x06

Axis address	Modbus command	Register address (H)	Register address (L)	Data value (H)	Data value (L)	CRC (L)	CRC (H)
01	06	08	01	00	02	5B	AB

Response:

Axis address	Modbus command	Register address (H)	Register address (L)	Data value (H)	Data value (L)	CRC (L)	CRC (H)
01	06	08	01	00	02	5B	AB

3. Write multiple holding registers: 0x10

01	Axis address
10	Modbus command
08	Register address (H)
0B	Register address (L)
00	Register quantity (H)
05	Register quantity (L)
0A	Data bytes
4E	First data value (H)
20	First data value (L)
00	Second data value (H)
00	Second data value (L)
04	Third data value (H)
B0	Third data value (L)
00	Fourth data value (H)
64	Fourth data value (L)
00	Fifth data value (H)
14	Fifth data value (L)
F8	CRC (L)
5B	CRC (H)

Response:

Axis address	Modbus command	Register addresses (H)	Register addresses (L)	Register quantity (H)	Register quantity (L)	CRC (L)	CRC (H)
01	10	08	0B	00	05	73	A8

4. Error frame

Axis address	03H/06H/10H error response	Error code	CRC (L)	CRC (H)
01	83/86/90	xx	CRCL	CRCH

Error codes:

01	Wrong command	19	Parameter exceeding upper/lower limit
03	Invalid parameter	20	Not input password or password expired
04	CRC error	22	Parameter not editable or restricted
16	Parameter group number data overflow	24	Password parameter not to be edited with others
17	Register quantity is 0	25	Wrong password input
18	32-bit data only reading 16-bit (H or L)	26	Wrong password input 5 times in a row

10.3 Communication DI functions

All DI functions can be controlled by communication. The procedures are:

Step 1. Check P04.01 to P04.09 settings. Set them to 0 if they are already assigned with the functions to be controlled by communication;

Step 2. Assign and enable corresponding communication DI function by P09.05 to P09.08.

Step 3. Write commands to corresponding addresses listed below.

Table 10-2 DI terminal configuration parameters for X3E series servo drive

Parameter No.	Description	Parameter value
P04. 01	DI1 function selection	The value 1 to 34 listed in table 1-1.
P04. 02	DI2 function selection	The value 1 to 34 listed in table 1-1.
P04. 03	DI3 function selection	The value 1 to 34 listed in table 1-1.
P04. 04	DI4 function selection	The value 1 to 34 listed in table 1-1.
P04. 05	DI5 function selection	The value 1 to 34 listed in table 1-1.
P04. 06	DI6 function selection	The value 1 to 34 listed in table 1-1.
P04. 07	DI7 function selection	The value 1 to 34 listed in table 1-1.
P04. 08	DI8 function selection	The value 1 to 34 listed in table 1-1.
P04. 09	DI9 function selection	The value 1 to 34 listed in table 1-1.

Table 10-3 Enabling setting of communication control DI function

Parameter No.	Description	Parameter value
P09. 05	Communication control DI enabling setting 1	Each binary bit of this parameter represents a DI function. BI T is reserved. BI T1～BI T15 corresponds to DI 1～15 in table 1-1 respectively. The value of the binary bit indicates whether the corresponding DI function of communication control is enabled: 0: Disable 1: Enable
P09. 06	Communication control DI enabling setting 2	BI T0～BI T15 corresponds to DI 16～31 in table 1-1 respectively.
P09. 07	Communication control DI enabling setting 3	BI T0～BI T15 corresponds to DI 32～47 in table 1-1 respectively.
P09. 08	Communication control DI enabling setting 4	BI T0～BI T15 corresponds to DI 48～63 in table 1-1 respectively.

Table 10-3 Communication DI addresses

Address	Usage	Remarks
3607H	Communication DI function status value 1	Bit0 is reserved. Bit1~Bit15 corresponds to DI functions 1-15. 0: Invalid 1: Valid
3608H	Communication DI function status value 2	Bit0~Bit15 corresponds to DI functions 16-31.
3609H	Communication DI function status value 3	Bit0~Bit15 corresponds to DI functions 32-47(Note 1).
360AH	Communication DI function status value 4	Bit0~Bit15 corresponds to DI functions 48-63(Note 2)

Caution：Communication address in Table 10-4 is represented by hexadecimal.

Note 1：DI 35～47 are reserved.

Note 2：DI 48～63 are reserved.

Example 1: Use communication to S-ON

Step 1: Set P04.01=0;

Step 2: Set P09.05=2H (10B);

Step 3: Write 2H to address 3607H continuously with intervals less than 5s (set by P09.11). Write 0H to turn off S-ON.

Note: If step 1 is skipped, Err.027 will occur.

Example 2: Use communication to ERR_RST and PERR_CLR

Step 1: Set P04.02=0, P04.04=0;

Step 2: Set P09.05=24H (100100B);

Step 3: Write 4H to address 3607H to ERR_RST. Write 20H to PERR_CLR. These two functions do not need to write continuously.

Note: If step 1 is skipped, Err.027 will occur.

10.4 Communication DO functions

Similar to DI, enable the communication output DO function and the corresponding parameter is P09. 09 and P09. 10. The read address is 3688H and 3689H.

P09. 09	Communication DO setting 1	Bit0 is reserved. Bit1~Bit15 corresponds to DO functions 1-15. 0: Invalid 1: Valid
P09. 10	Communication DO setting 2	Bit0~Bit15 corresponds to DO functions 16-31. 0: Invalid 1: Valid

Address	Usage	Remarks
3688H	Communication DO function selection 1	Bit0 is reserved. Bit1~Bit15 corresponds to DO functions 1-15. 0: Invalid 1: Valid
3689H	Communication DO function selection 2	Bit0~Bit15 corresponds to DO functions 16-31.

Example: Use communication to read V_CMP

Step 1: Set P04.26=0;

Step 2: Set P09.09=40H (100000B);

Step 3: Read Bit6 of 3688H.

10.5 Reading encoder absolute positions

Read number of turns of absolute encoder. The data is signed 32-bit.

Axis address	Modbus command	Register addresses (H)	Register addresses (L)	Register quantity (H)	Register quantity (L)	CRC (L)	CRC (H)

01	03	15	20	00	02	C1	CD

Response:

Axis address	Modbus command	Bytes	Bit 8~15	Bit 0~7	Bit 24~31	Bit 16~23	CRC (L)	CRC (H)
01	03	04	00	03	00	00	0A	33

Read single turn position of absolute encoder. The data is unsigned 32-bit.

Axis address	Modbus command	Register addresses (H)	Register addresses (L)	Register quantity (H)	Register quantity (L)	CRC (L)	CRC (H)
01	03	15	22	00	02	60	0D

Response:

Axis address	Modbus command	Bytes	Bit 8~15	Bit 0~7	Bit 24~31	Bit 16~23	CRC (L)	CRC (H)
01	03	04	36	07	00	01	85	8A