BURNY

1250 & 1250 *Plus*

OPERATOR CONTROL SYSTEM

Operation and Maintenance Manual

Revision: March 2001
(For use with software version 5/7/95 and later)

AO-73367-B

Cleveland Motion Controls
An IMC Company

This documentation may not be copied, photocopied, reproduced, translated, or reduced to any electronic medium or machine-readable format without explicit written permission from the BURNY DIVISION OF CLEVELAND MACHINE CONTROLS.

© Cleveland Machine Controls 2001
Burny Division
7550 Hub Parkway
Cleveland, Ohio 44125-5794
Telephone: 216 / 524-8800
Fax: 216 / 642-2199

Burny 1250

Documentation for compliance with the EMC Directive (EC)

These instructions must be followed during the installation of the Burny 1250 control. This insures compliance with the EC 's EMC Directive, and provides the best protection against outside RFI interference. These installation procedures should be used for ALL installations.

Contents:

- Installation instructions for EMC compatibility
- Drawings AO-72102, AO-72103, AO-72104, AO-72105, AO-72106, AO-72107, AO-72108

Burny 1250 -- Installation Instructions to insure compliance with EMC Directive

1. All Cabinet screws on the **Burny 1250** enclosure must be installed and securely tightened.

2. All cables connected to the **Burny 1250** must be supplied by Burny-Etek, or must be built to Burny-Etek cable specifications. Specific cable construction drawings will be supplied upon request.

3. All cables connected to the **Burny 1250** must have external braid shielding, with metal ground clamps at each end of the cable to connect the braid to the equipment. Metal grounding clamps must fit tightly onto the external braid-- if clamp is loose, gently crimp the clamp onto the braid to provide a secure connection. Don't crimp any harder than necessary to avoid damaging the internal cable. (Customer supplied cables which do not use external braid must be approved by Burny-Etek).

   Armature/Tach cables (MO-06926-XXX and others) require a metal grounding clamp to be installed at both ends of the cable.

   - At the **Burny 1250**, the external braid on the Motor/Tach cable should be grounded to the cabinet grounding screw closest to the RMTR and CMTR connectors using a 360 degree contact metal grounding clamp-- See drawing AO-72105.

   - At the Motor end of the cable, the external braid must be grounded to the motor mounting bracket using the metal cable clamp as shown in drawing AO-72106

   All other cables that connect to the back of the Burny 1250 enclosure must have their external braid grounded to the Burny 1250 enclosure with metal clamps:

   - Encoder cables, RS-232 Cables, Limit Switch Cables, Resolver cables and any other type of cable connected to the back of the **Burny 1250** should have it's external braid shielding connected to one of the cabinet grounding screws provided on the back of the **Burny 1250** enclosure-- using a metal, 360 degree contact grounding clamp. See drawing AO-72105.

   Cables to rack mounted encoders (H20 or H25 type) require that their external braid shield be connected to the housing of the encoder using a metal grounding clamp.

   - See drawing AO-72103 for details on grounding the encoder cable to the case of this type of encoder.

4. The enclosure of the **Burny 1250** must be grounded to the machine frame's earth ground connection point by a braided ground strap-- at least 12 mm in width. A wide flat ground strap provides a better RF ground path therefore a strap is preferred. The strap can be terminated with standard crimp terminals at both ends. The strap should connect to one of the chassis grounding screws on the back of the **Burny 1250** per drawing AO-72102.

5. Any connectors on the back of any Burny-Etek product that do not have a cable connected must have plastic protective cover installed. This can either be the red disposable type or the attached screw thread covers.

6. If motor mounted encoders are used the MO-11124 Kit must be installed over the junction of the plastic connectors between the encoder cable, and the short lead coming from the encoder. This kit and instructions are shipped with each of the following cables, and are also shown on drawing AO-72107.

   Cables which require connector shield kit: MO-08798-XXX
   MO-09938-XXX

7. Service must be performed by trained authorized technicians only. Service technicians must wear a static grounding wristband connected to the equipment enclosure when removing or installing any boards or EPROMS in the system. All circuit cards must be shipped in protective anti-static shielding bags, and any card or part removed from a Burny-Etek product must be immediately placed into one of these anti-static bags. Any circuit card or electronic component returned for credit or repair must be shipped in an anti-static bag. If a circuit card is returned without the proper anti-static packaging, no warranty or credit will be issued. Contact Burny-Etek for specifications or help with anti-static packaging.

8. All motors used with the **Burny 1250** must be supplied by Burny-Etek to insure compliance with the radiated emission requirements of the EMC Directive. If other than Burny-Etek supplied motors are used, it is the responsibility of the machine builder to test the motors in the system for compliance with the EMC directive.

BLANK

INSTALL WIDE (12mm) GROUND STRAP BETWEEN BURNY PRODUCT CABINET AND MACHINE CHASSIS GROUND POINT

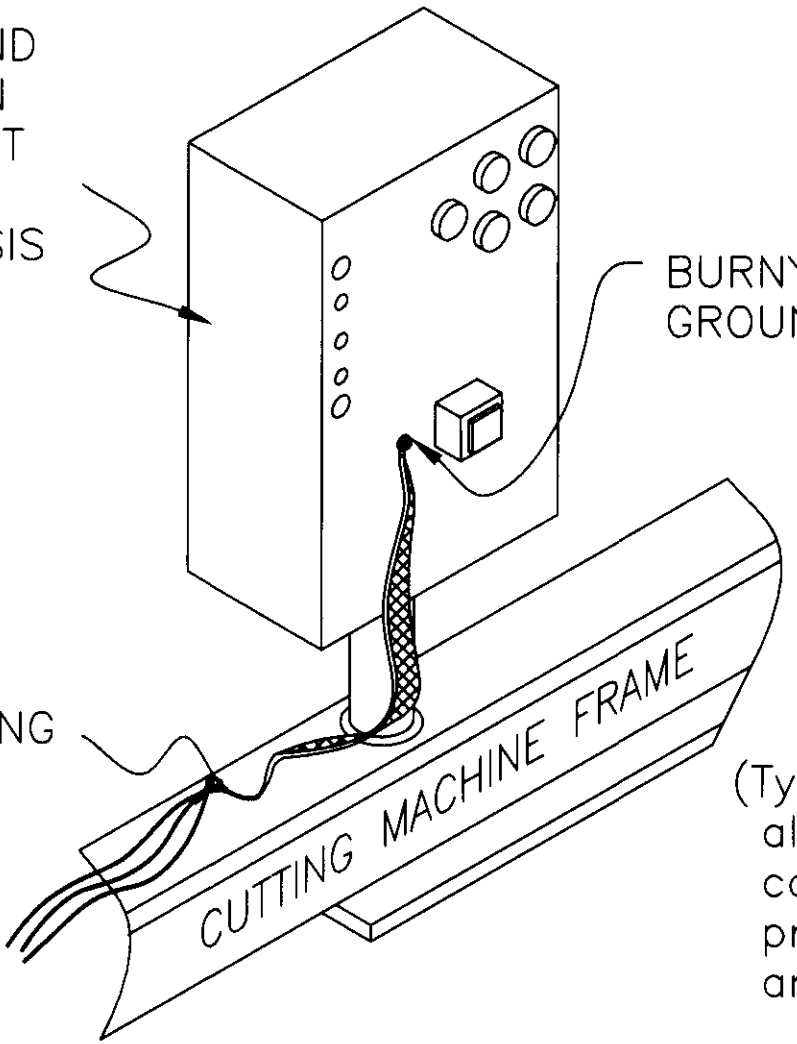

(Typical cabinet shown— all Burny products have cabinet grounding screws provided for ground straps and cable connection)

This print is the property of *Cleveland Motion Controls, Inc.* and is furnished as confidential information only. It must not be copied, traced or reproduced in any manner nor submitted to any outside parties for any purpose without our written permission. Any use of this print without written permission of *Cleveland Motion Controls, Inc.* is a violation of our exclusive rights.

SYM	REVISION	ECO	BY	DATE
F				
E				
D				
C				
B				
A	RELEASED		KJB	12-95

TOLERANCES (EXCEPT AS NOTED)
DECIMAL
X.X ± .030
X.XX ± .015
X.XXX ± .005
ANGULAR
± 0.5°
DO NOT SCALE DRAWING

Cleveland Motion Controls
An IMC Company
7550 HUB PARKWAY CLEVELAND, OHIO

MATERIAL	FINISH	SCALE	REF
NOTE	NOTE	1 : 1	

CUSTOMER INSTRUCTION GROUND STRAP INSTALLATION

CAD DWG NO. : DXXX-XXXXX_X.DWG		SIZE	DRAWING NUMBER	REV
DRAWN BY KJB	APPROVED BY KJB	A	A0-72102	A
DATE 12/12/95	DATE 12/95	SHEET 1 OF 1		

BLANK

ENCODER BRACKET ASSEMBLY

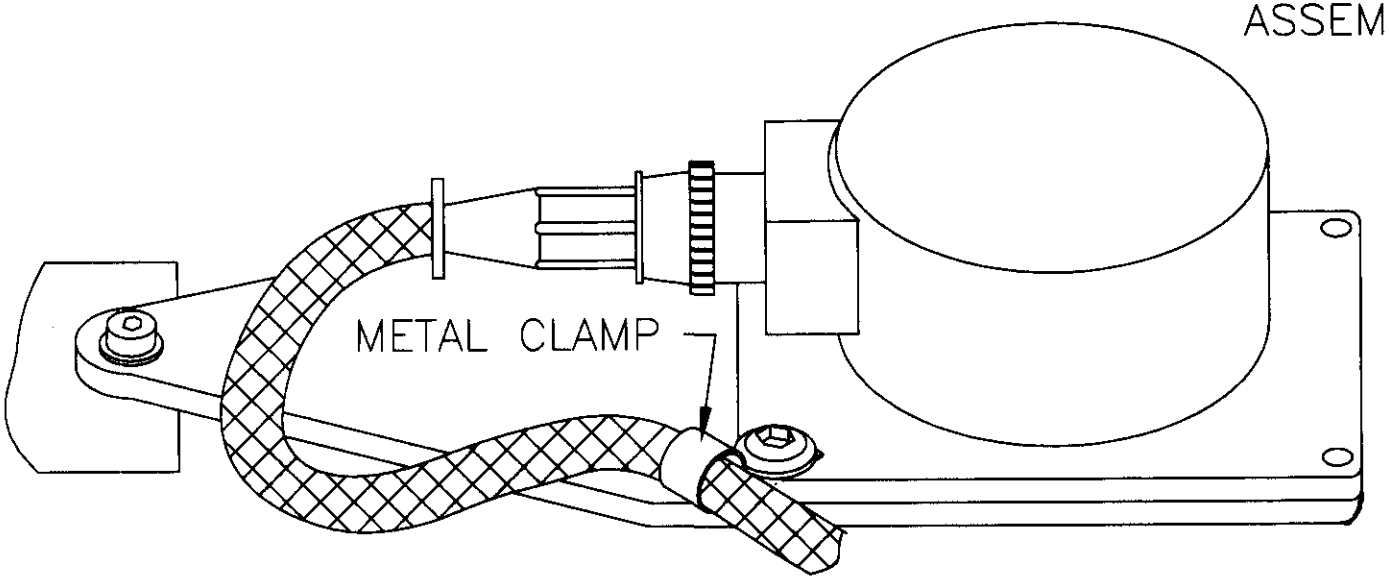

GROUND EXTERNAL CABLE SHIELD TO ENCODER BASE USING EXISTING HARDWARE AND 360° METAL CLAMP

METAL CLAMPS PROVIDED WITH ALL BURNY CABLE ASSEMBLIES

This print is the property of *Cleveland Motion Controls, Inc.* and is furnished as confidential information only. It must not be copied, traced or reproduced in any manner nor submitted to any outside parties for any purpose without our written permission. Any use of this print without written permission of *Cleveland Motion Controls, Inc.* is a violation of our exclusive rights.

SYM	REVISION	ECO	BY	DATE
F				
E				
D				
C				
B				
A	RELEASED		KJB	12-95

TOLERANCES (EXCEPT AS NOTED)
DECIMAL
X.X ± .030
X.XX ± .015
X.XXX ± .005
ANGULAR
± 0.5°
DO NOT SCALE DRAWING

Cleveland Motion Controls
An IMC Company
7550 HUB PARKWAY CLEVELAND, OHIO

MATERIAL	FINISH	SCALE	REF
NOTE	NOTE	1 : 1	

RACK MOUNTED ENCODER CABLE GROUND CLAMP INSTRUCTIONS

CAD DWG NO. : DXXX-XXXXX_X.DWG		SIZE	DRAWING NUMBER	REV
DRAWN BY: KJB	APPROVED BY: KJB	A	A0-72103	A
DATE: 12/95	DATE: 12-95	SHEET 1 OF 1		

BLANK

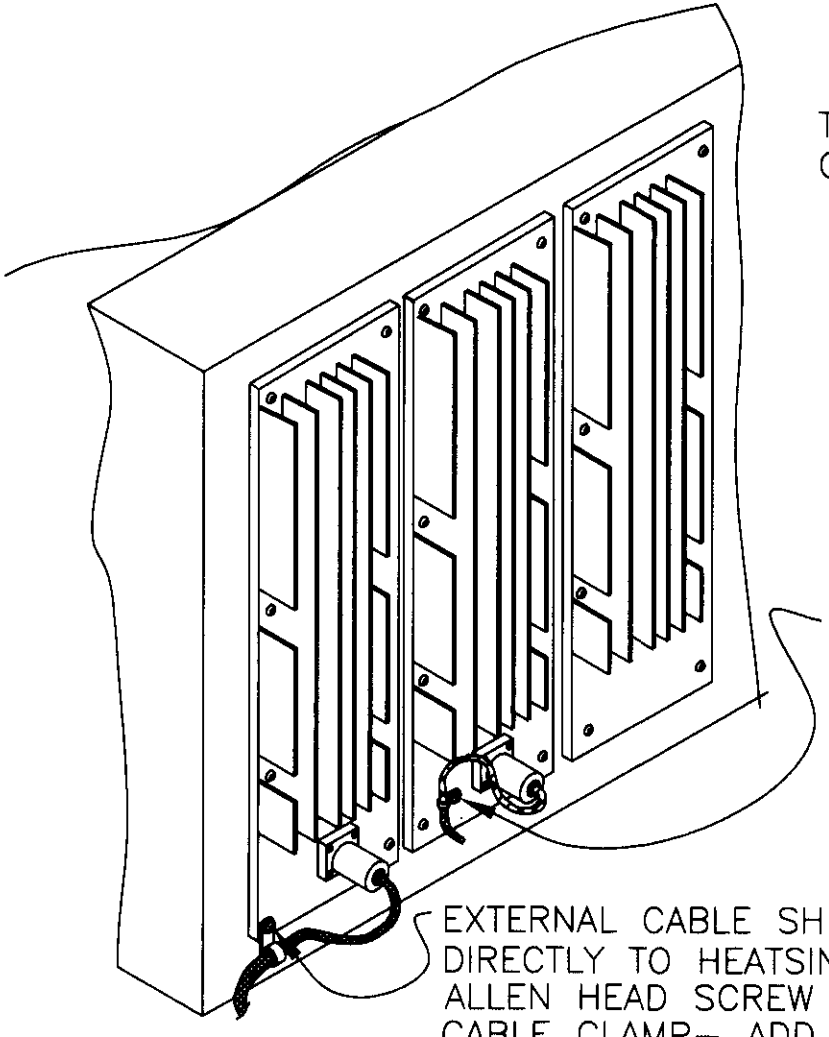

TYPICAL BACKPANEL ON BURNY 2.8
OR SERVOPAK 150.

NEW HEATSINK HAS CABLE GROUNDING SCREW PROVIDED – IF PRESENT,THIS SCREW SHOULD BE USED TO CONNECT EXTERNAL BRAID TO HEATSINK

EXTERNAL CABLE SHIELD GROUNDED DIRECTLY TO HEATSINK BY EXISTING ALLEN HEAD SCREW WITH 360° METAL CABLE CLAMP– ADD FLAT WASHER IF NECESSARY

METAL CLAMPS PROVIDED WITH ALL BURNY CABLE ASSEMBLIES.

This print is the property of *Cleveland Motion Controls, Inc.* and is furnished as confidential information only. It must not be copied, traced or reproduced in any manner nor submitted to any outside parties for any purpose without our written permission. Any use of this print without written permission of *Cleveland Motion Controls, Inc.* is a violation of our exclusive rights.

SYM	REVISION	ECO	BY	DATE
F				
E				
D				
C				
B				
A	RELEASED		KJB	12-95

TOLERANCES (EXCEPT AS NOTED)
DECIMAL
X.X ± .030
X.XX ± .015
X.XXX ± .005
ANGULAR
± 0.5°
DO NOT SCALE DRAWING

Cleveland Motion Controls
An IMC Company
7550 HUB PARKWAY CLEVELAND, OHIO

MATERIAL	FINISH	SCALE	REF
NOTE	NOTE	1 : 1	

ServoPak MOTOR/TACH. GROUND

CAD DWG NO. : DXXX-XXXXX_X.DWG		SIZE	DRAWING NUMBER	REV
DRAWN BY KJB	APPROVED BY KJB	A	A0-72104	A
DATE 12-95	DATE 12-95	SHEET 1 OF 1		

BLANK

USE 360° METAL CLAMP TO GROUND EXTERNAL BRAID TO CABINET GROUNDING SCREWS PROVIDED ON THE BACK OF ALL BURNY PRODUCTS. ALL CABLES MUST BE GROUNDED IN THIS FASHION

METAL CLAMPS PROVIDED WITH ALL BURNY CABLE ASSEMBLIES

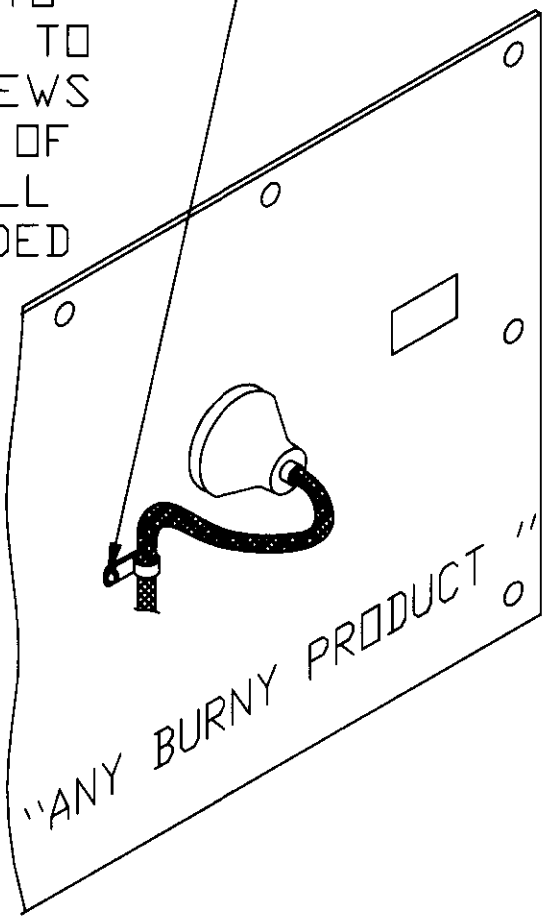

This print is the property of *Cleveland Motion Controls, Inc.* and is furnished as confidential information only. It must not be copied, traced or reproduced in any manner nor submitted to any outside parties for any purpose without our written permission. Any use of this print without written permission of *Cleveland Motion Controls, Inc.* is a violation of our exclusive rights.

SYM	REVISION	ECO	BY	DATE
F				
E				
D				
C				
B				
A	RELEASED		KJB	12-95

TOLERANCES (EXCEPT AS NOTED)
DECIMAL
X.X ± .030
X.XX ± .015
X.XXX ± .005
ANGULAR
± 0.5°
DO NOT SCALE DRAWING

Cleveland Motion Controls
An IMC Company
7550 HUB PARKWAY CLEVELAND, OHIO

MATERIAL	FINISH	SCALE	REF
NOTE	NOTE	1 : 1	

CABLE GROUND TO BACK OF CABINET

CAD DWG NO. : DXXX-XXXXX_X.DWG

DRAWN BY	APPROVED BY
KJB	KJB
DATE	DATE
12-95	12-95

SIZE	DRAWING NUMBER	REV
A	A0-72105	A

SHEET 1 OF 1

BLANK

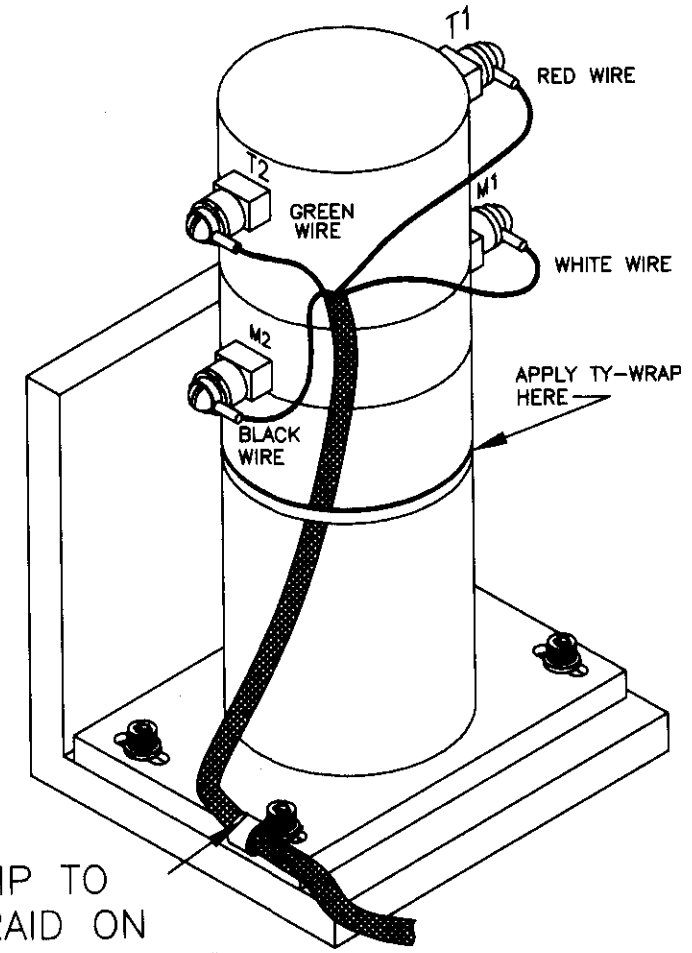

USE 360° METAL CLAMP TO GROUND EXTERNAL BRAID ON MOTOR/TACH. CABLE TO ONE OF THE SCREWS ON THE MOTOR MOUNTING PLATE AS SHOWN

METAL CLAMPS PROVIDED WITH ALL BURNY CABLE ASSEMBLIES

This print is the property of *Cleveland Motion Controls, Inc.* and is furnished as confidential information only. It must not be copied, traced or reproduced in any manner nor submitted to any outside parties for any purpose without our written permission. Any use of this print without written permission of *Cleveland Motion Controls, Inc.* is a violation of our exclusive rights.

SYM	REVISION	ECO	BY	DATE
F				
E				
D				
C				
B				
A	RELEASED		JB	12-95

TOLERANCES (EXCEPT AS NOTED)
DECIMAL
X.X ± .030
X.XX ± .015
X.XXX ± .005
ANGULAR
± 0.5°
DO NOT SCALE DRAWING

Cleveland Motion Controls
An IMC Company
7550 HUB PARKWAY CLEVELAND, OHIO

MATERIAL	FINISH	SCALE	REF
NOTE	NOTE	1 : 1	

MOTOR CABLE GROUND CLAMP INSTALLATION (2630)

CAD DWG NO. : DXXX-XXXXX_X.DWG		SIZE	DRAWING NUMBER	REV
DRAWN BY KJB	APPROVED BY KJB	A	A0-72106	A
DATE 12-95	DATE 12-95	SHEET 1 OF 1		

BLANK

WITH CABLES DISCONNECTED, SLIDE METAL BRAID COMPLETLY ONTO THE ENCODER CABLE. PLUG THE CONNECTORS TOGETHER, AND SLIDE THE BRAID OVER THE CONNECTORS AS SHOWN. APPLY METAL CLAMPS AND USE SUPPLIED HARDWARE TO GROUND BRAID TO EXTERNAL CABLE SHIELD

USE SMALLER AL4 CLAMP ON THIS END

SELECT AL4 OR LARGER AL5 CLAMP TO FIT TIGHTLY ON ENCODER CABLE WITHOUT DAMAGING INTERNAL CONDUCTORS

METAL BRAID, BRAID CLAMPS AND HARDWARE SUPPLIED IN MO-11124 "ENCODER" CONNECTOR SHIELD KIT

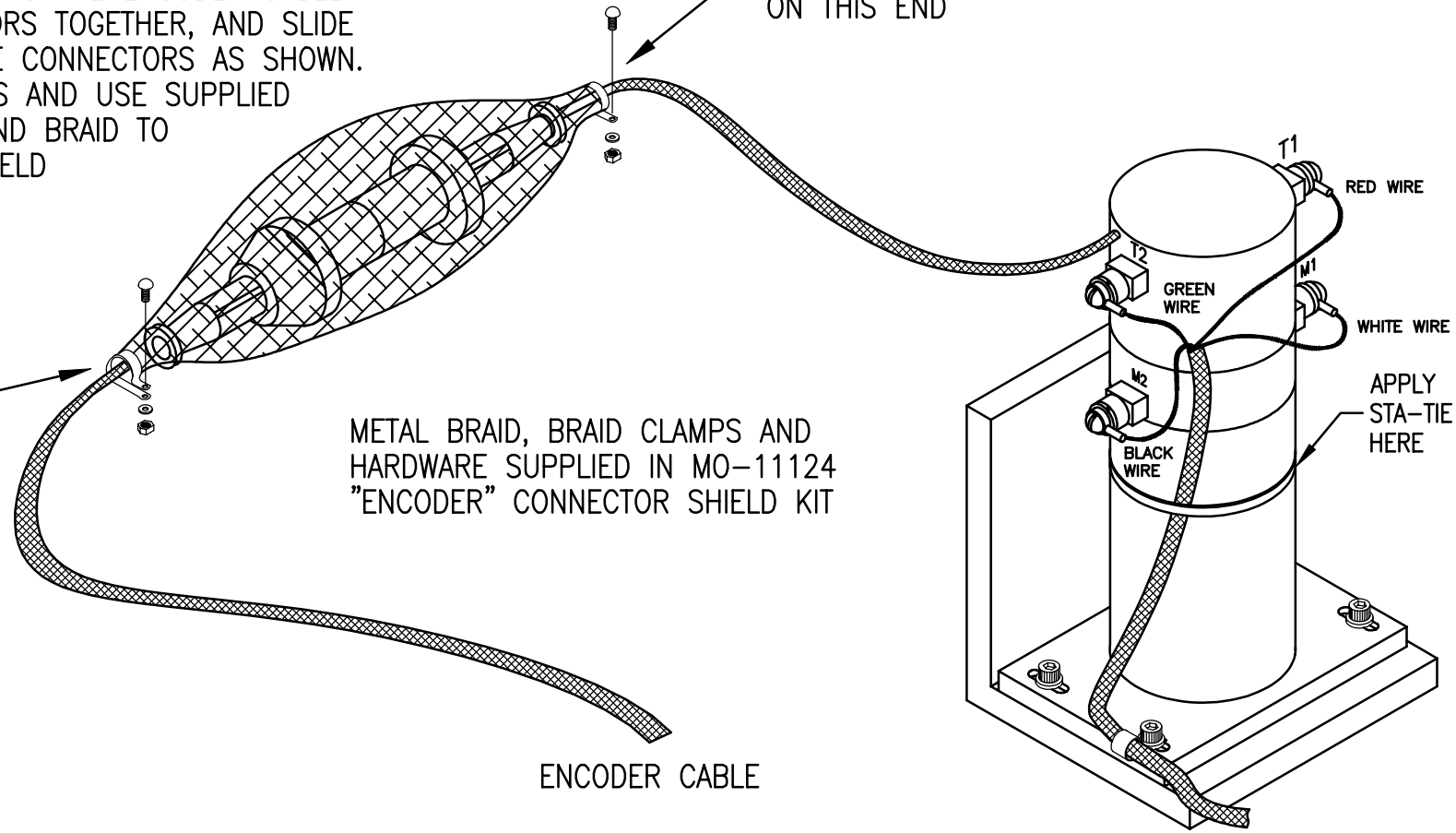

This print is the property of *Cleveland Motion Controls, Inc.* and is furnished as confidential information only. It must not be copied, traced or reproduced in any manner nor submitted to any outside parties for any purpose without our written permission. Any use of this print without written permission of *Cleveland Motion Controls, Inc.* is a violation of our exclusive rights.

SYM	REVISION	ECO	BY	DATE
FA				
EA				
DA				
CA				
BA	NOTE AL4 OR AL5 CLAMP	CLE2758	RDM	03/04
AA	AS RELEASED	KJB	KJB	12/95

TOLERANCES (EXCEPT AS NOTED)
DECIMAL
X.X ± .030
X.XX ± .015
X.XXX ± .005
ANGULAR
± 0.5°
DO NOT SCALE DRAWING

Cleveland Motion Controls
An IMC Company
7550 HUB PARKWAY CLEVELAND, OHIO

MATERIAL	FINISH	SCALE	REF

CUSTOMER INSTRUCTIONS ENCODER CONNECTOR SHIELD INSTALLATION

CAD DWG NO. : AO-72107BA.DWG		SIZE	DRAWING NUMBER	REV
DRAWN BY KJB	APPROVED BY KJB	A	AO-72107	BA
DATE 12-95	DATE 12-95	SHEET 1 OF 1		

BLANK

WITH CABLES DISCONNECTED,SLIDE METAL BRAID COMPLETLY ONTO THE TRACER CABLE. PLUG THE CONNECTORS TOGETHER,AND SLIDE THE BRAID OVER THE CONNECTORS AS SHOWN.
APPLY METAL CLAMPS AND USE SUPPLIED HARDWARE TO GROUND BRAID TO EXTERNAL CABLE SHIELD.

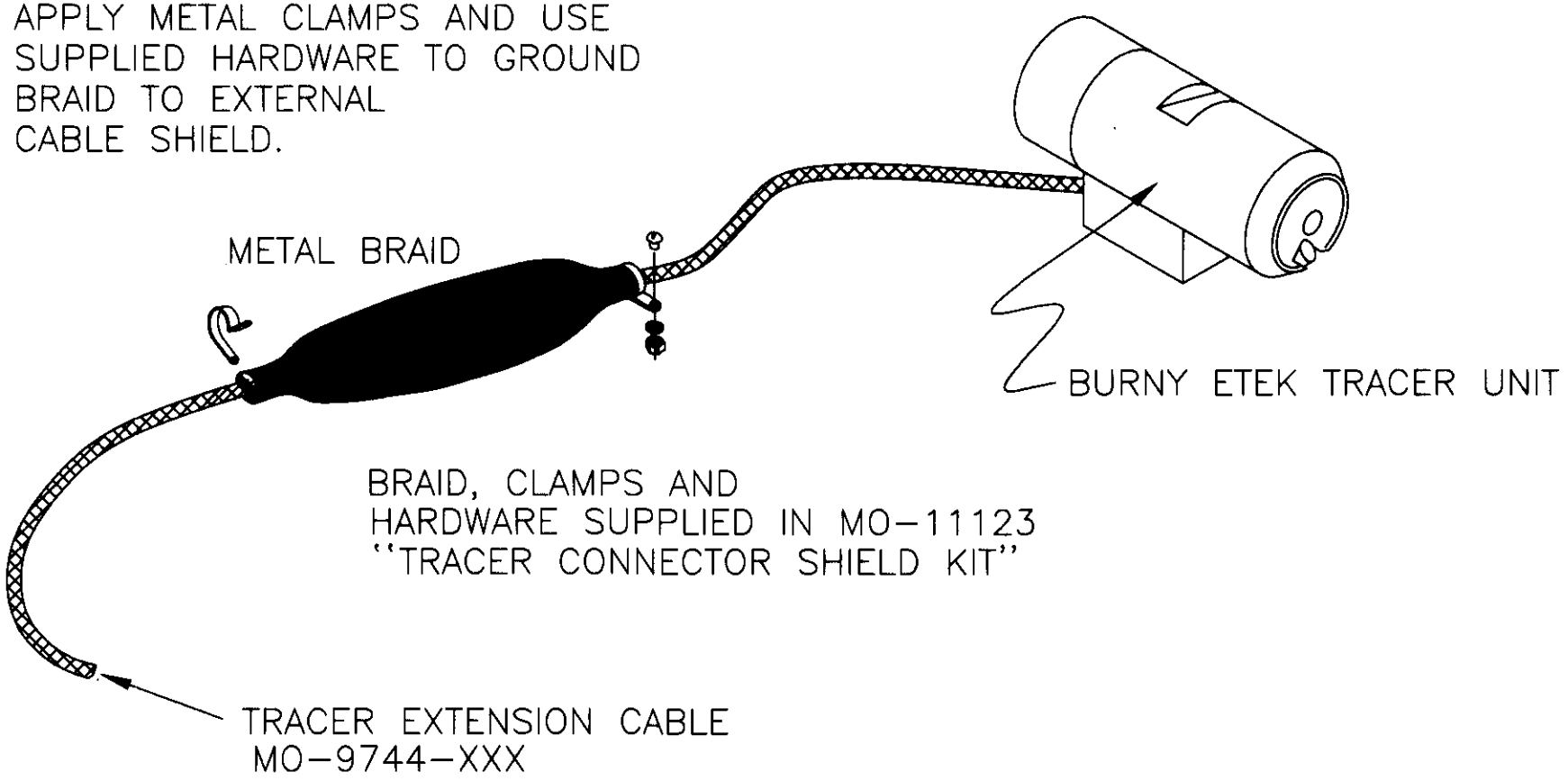

This print is the property of *Cleveland Motion Controls, Inc.* and is furnished as confidential information only. It must not be copied, traced or reproduced in any manner nor submitted to any outside parties for any purpose without our written permission. Any use of this print without written permission of *Cleveland Motion Controls, Inc.* is a violation of our exclusive rights.

SYM	REVISION	ECO	BY	DATE
F				
E				
D				
C				
B				
A	REV. KIT No.& CHG.No.	11478	KJB	12-95

TOLERANCES (EXCEPT AS NOTED)
DECIMAL
X.X ± .030
X.XX ± .015
X.XXX ± .005
ANGULAR
± 0.5°
DO NOT SCALE DRAWING

Cleveland Motion Controls
An IMC Company
7550 HUB PARKWAY CLEVELAND, OHIO

MATERIAL	FINISH	SCALE	REF
NOTE	NOTE	1 : 1	

CUSTOMER INSTRUCTION
TRACER CONNECTOR SHIELD

CAD DWG NO. : DXXX-XXXXX_X.DWG		SIZE	DRAWING NUMBER	REV
DRAWN BY KJB	APPROVED BY KJB	A	A0-72108	A
DATE 12-95	DATE 12-95	SHEET 1 OF 1		

BLANK

WARRANTY AND LIMITATION OF LIABILITY

PART 1: SYSTEM OVERVIEW

INTRODUCTION

Safety Precautions PART-1:INTRO-1
General Precautions PART-1:INTRO-1
Machine Precautions PART-1:INTRO-2

GENERAL OPERATIONS SUMMARY

Optional Language Feature PART-1:OPER-1
Axis Definitions PART-1:OPER-1
Applying Power to the 1250 ..... PART-1:OPER-1
Keypad Layout PART-1:OPER-1
- Display Key PART-1:OPER-2
- Recycle Key PART-1:OPER-2
- Numeric Keypad PART-1:OPER-2
- Up and Down Scroll Arrow Keys PART-1:OPER-3
- Speed Control PART-1:OPER-3
- Jog Controls PART-1:OPER-4
- NC Run PART-1:OPER-4
- Part Return PART-1:OPER-4
- Back Up PART-1:OPER-4
- Cycle Start PART-1:OPER-4
- Cycle Stop PART-1:OPER-5
- Lifter PART-1:OPER-5
- Clutch PART-1:OPER-5
- E-Stop PART-1:OPER-5

PART 2: SYSTEM OPERATIONS

MAIN FUNCTION SELECTION MENU

Run Program PART-2:MENU-2
Load- From Standard Shapes PART-2:MENU-2
Load- From RS-232 ..... PART-2:MENU-2
Store- From RS-232 ..... PART-2:MENU-2
Delete- Program PART-2:MENU-3
Edit / New- Program PART-2:MENU-3
Store- To Floppy PART-2:MENU-3
Load- From Floppy PART-2:MENU-3
Load / Run RS-232 ..... PART-2:MENU-3
Load / Run From Floppy PART-2:MENU-4

STANDARD SHAPE SELECTION

Shape Selection PART-2:SHAPES-1
Dimensions Common to Most Shapes PART-2:SHAPES-2

RUNNING A PROGRAM

Plasma - Oxygen / Fuel Selection PART-2:RUN-1
Geometry Modification Options PART-2:RUN-1
Scaling PART-2:RUN-2
Part Rotation Option PART-2:RUN-2
X/Y Axis Mirror Option PART-2:RUN-2
Knife Compensation Option PART-2:RUN-3
Dial-In-Kerf Standard Feature PART-2:RUN-3
Cutting Mode Selection PART-2:RUN-3
Manual Cut PART-2:RUN-3
Auto Cut PART-2:RUN-4
Test Run PART-2:RUN-4
Single Step PART-2:RUN-5
Cycle Start PART-2:RUN-5
Run-Time Messages PART-2:RUN-6
Running Description PART-2:RUN-8

PART 3: SYSTEM UTILITIES

PROGRAM TEXT EDITOR

Program Editing PART-3:EDIT-1
Main Data Block Display PART-3:EDIT-1
Editing Commands PART-3:EDIT-2
Line / Arc Block Editing PART-3:EDIT-2
Function Block Editing PART-3:EDIT-3
Deleting a Data Block PART-3:EDIT-4
Inserting a Data Block PART-3:EDIT-4
Terminating the Editor PART-3:EDIT-5
Internal Function Names and Codes PART-3:EDIT-6
Creating a Sample Program PART-3:EDIT-11

DISPLAY MODES

Display Mode PART-3:DSPY-1
Exit Mode PART-3:DSPY-1
X/Y Display PART-3:DSPY-1
Parts Cut PART-3:DSPY-1
Feedrate PART-3:DSPY-2
System Status PART-3:DSPY-2
Service Displays PART-3:DSPY-2
Configuration PART-3:DSPY-2

SPECIAL FUNCTIONS

Manual Control Mode PART-3:SPCFNC-1

Plasma / Oxygen Fuel Cutting Selection PART-3:SPCFNC-1
Oxygen / Fuel Control Functions PART-3:SPCFNC-2
Oxy Preheat / Cut PART-3:SPCFNC-2
Oxy Enable PART-3:SPCFNC-2
Oxy Start PART-3:SPCFNC-3
Preheat PART-3:SPCFNC-3
Plasma Manual Control Functions PART-3:SPCFNC-3
Plasma Cut PART-3:SPCFNC-3
Plasma Cut / Jog PART-3:SPCFNC-4
Plasma Enable PART-3:SPCFNC-4
Plasma Start PART-3:SPCFNC-4
Height Disable PART-3:SPCFNC-4
Marker Test PART-3:SPCFNC-5
Go Home PART-3:SPCFNC-5
Go Home Menu PART-3:SPCFNC-5
Go To Table Home From Part Programs PART-3:SPCFNC-6
Set Home PART-3:SPCFNC-7

FLOPPY DRIVE OPERATION

Floppy Disk Drives PART-3:FLOPPY-1
Floppy Utilities Disk PART-3:FLOPPY-1
Serial Connection PART-3:FLOPPY-2
Loading Files from the Floppy PART-3:FLOPPY-2
Saving Files to Floppy Disk PART-3:FLOPPY-2

PART 4: PART PROGRAMMING

PROGRAMMING THE NC CONTROL

WORD ADDRESS PROGRAMMING LANGUAGE

Word Address Programming PART-4:WADR-1
Word Address Data Block Specification PART-4:WADR-1
Key Character Descriptions PART-4:WADR-1
N - Line Number PART-4:WADR-1
P - Program Number PART-4:WADR-1
X - Dimension for Lines or Arcs PART-4:WADR-2
Y - Dimension for Lines or Arcs PART-4:WADR-2
I - Dimension for Arcs PART-4:WADR-2
J - Dimension for Arcs PART-4:WADR-3
G - Preparatory Functions PART-4:WADR-4
M - Auxiliary Functions PART-4:WADR-5
F - Dwell Time PART-4:WADR-6
F - Feedrate PART-4:WADR-6
G Code Descriptions PART-4:WADR-6
M Code Descriptions PART-4:WADR-10
Word Address Sample Program PART-4:WADR-13

ESSI PROGRAMMING

ESSI Programming PART-4:ESSI-1
Line and Arc Moves PART-4:ESSI-1
ESSI Auxiliary Functions PART-4:ESSI-2
ESSI Sample Program PART-4:ESSI-5

PART 5: SERIAL COMMUNICATIONS

SERIAL COMMUNICATIONS

Serial Communications PART-5:SERIAL-1
The Communication Port PART-5:SERIAL-3
Connecting to RS-232 Devices PART-5:SERIAL-5
RS-232 Pin Configuration PART-5:SERIAL-6
RS-232 for Hardware Handshaking PART-5:SERIAL-7
RS-232 for Software Handshaking PART-5:SERIAL-9
Connecting to RS-422 Devices PART-5:SERIAL-11
Character Formats PART-5:SERIAL-13
Handshaking Protocol Specifications PART-5:SERIAL-13
RTS / CTS Hardware Protocol PART-5:SERIAL-13
XON / XOFF Software Protocol PART-5:SERIAL-14
Special Handshaking Protocols PART-5:SERIAL-15
Communication Enhancement Feature PART-5:SERIAL-15
Load- From RS-232 Using RTS / CTS PART-5:SERIAL-15
Typical Load- From RS232 Using XON / XOFF PART-5:SERIAL-16
CAD Link (CLINK) Protocol PART-5:SERIAL-17
File Data PART-5:SERIAL-17
File Get PART-5:SERIAL-18
File Queue PART-5:SERIAL-19
File Quit PART-5:SERIAL-19
Three-Digit Status Codes PART-5:SERIAL-20

PART 6: INSTALLATION AND SETUP

SERVICING THE CONTROL

Back-Up Programs Stored in the 1250 ..... PART-6:SERVICE-1
Before Calling the Factory PART-6:SERVICE-2

INSTALLATION AND SETUP

Service Mode Key PART-6:INSTAL-1
Display Functions PART-6:INSTAL-2
Power-Up Diagnostics PART-6:INSTAL-2
Service Mode PART-6:INSTAL-3
Service Mode Menu PART-6:INSTAL-3
Exit Mode PART-6:INSTAL-3
X / Y Display PART-6:INSTAL-4
Parts Cut PART-6:INSTAL-4

Feedrate PART-6:INSTAL-4
System Status PART-6:INSTAL-4
System Data PART-6:INSTAL-4
Display Variables PART-6:INSTAL-33
Memory Display Utilities PART-6:INSTAL-36
Show Word PART-6:INSTAL-37
Show Dble PART-6:INSTAL-38
Show Cruw PART-6:INSTAL-38
Show Byte PART-6:INSTAL-38
Show Crub PART-6:INSTAL-39
Axis Speed PART-6:INSTAL-39
Spd Cal PART-6:INSTAL-39
Mem Reset PART-6:INSTAL-40
Ref Adjust PART-6:INSTAL-40
Custom Aux PART-6:INSTAL-41
Loop Back PART-6:INSTAL-45
Var Store PART-6:INSTAL-45
System Reset PART-6:INSTAL-46

TYPICAL SETUP EXAMPLE

Typical Setup Example Description PART-6:EXAMPLE-1
Typical Setup Example Quick Reference PART-6:EXAMPLE-6

PART 7: MACHINE INTERFACE

MACHINE INTERFACE

Relay Card Technical Description PART-7:MACHINE-1
Line Power Input PART-7:MACHINE-1
Lifter PART-7:MACHINE-1
Power Supply PART-7:MACHINE-2
Emergency Stop PART-7:MACHINE-2
Plasma Cut Sense PART-7:MACHINE-2
Marker PART-7:MACHINE-2
Height Disable PART-7:MACHINE-3
Plasma Start PART-7:MACHINE-3
Plasma Stop PART-7:MACHINE-3
DIP Switch PART-7:MACHINE-3
Interface Card Technical Description PART-7:MACHINE-4
Power Supply PART-7:MACHINE-4
Analog Inputs to Interface Card PART-7:MACHINE-4
Analog Outputs from Interface Card PART-7:MACHINE-4
Encoder Inputs to Interface Card PART-7:MACHINE-4
Encoder Outputs from Interface Card PART-7:MACHINE-4
Digital Inputs to Interface Card PART-7:MACHINE-4
Digital Outputs from Interface Card PART-7:MACHINE-5
Product Specification PART-7:MACHINE-6
Physical Environment Operating Limits PART-7:MACHINE-6
Electrical Specifications PART-7:MACHINE-6

PART 8: ERROR MESSAGES

ERROR MESSAGES

Errors from Program Operations PART-8:ERROR-1
Run-Time Errors.....PART-8:ERROR-2
Errors During Serial I/O Operations.....PART-8:ERROR-3

PART 9

RETROFIT AND INSTALLATION

General Explanation of a CNC Retrofit PART-9:RETROFIT-1
Mounting the Gear Rack.....PART-9:RETROFIT-1
Mounting the Encoder PART-9:RETROFIT-2
Determining Cable Length PART-9:RETROFIT-3

PART 10: DRIVES AND CALIBRATION

DRIVES AND CALIBRATION

Servo Drive Adjustments.....PART-10:SERVO-1
1250 Motor Specification.....PART-10:SERVO-3

PART 11: INDEX

PART 12: DRAWINGS AND SCHEMATICS

DRAWINGS AND SCHEMATICS

Schematics Drawing List for the 1250 .....PART-12:SCHEMATICS-1
Spare Parts List for the 1250 .....PART-12:SCHEMATICS-2

WARRANTY AND LIMITATION OF LIABILITY

All equipment is sold subject to the mutual agreement that it is warranted by the company to be free from defects of material and workmanship but the company shall not be liable for special, indirect or consequential damages of any kind under this contract or otherwise. The company's liability shall be limited exclusively to replacing or repairing without charge, at its factory or elsewhere at its discretion, any material or workmanship defects which become apparent within one year from the date on which the equipment was shipped, and the company shall have no liability for damages of any kind arising from the installation and/or use of the apparatus by anyone. The buyer by the acceptance of the equipment will assume all liability for any damages which may result from its use or misuse by the buyer, his or its employees, or by others.

The warranties of the company do not cover, and the company makes no warranty with respect to any defect, failure, deficiency or error which is:

(A) Not reported to the company within the applicable warranty period; or

(B) Due to misapplication, modification, disassembly, abuse, improper installation by others, abnormal conditions of temperature, dirt, or corrosive matter; or

(C) Due to operation, either intentional or otherwise, above rated capacities or in an otherwise improper manner.

There are no other warranties, express or implied, including the implied warranties of merchantability and fitness for a particular purpose.

BLANK

INTRODUCTION

The **BURNY 1250 Operator Control System (1250)** and the **BURNY 1250 Plus Operator Control System (1250+)** have identical operating functions and physical layouts. Serial baud rates for the **1250 +** have a wider range, going from 110 to 230K baud. The upper front panels have a different appearance but the same controls are in the same places and have the same functions. The two versions of the control differ only in their processor card; the processor card in the **BURNY 1250+** operates at much higher speed. This manual covers both versions with drawings for both.

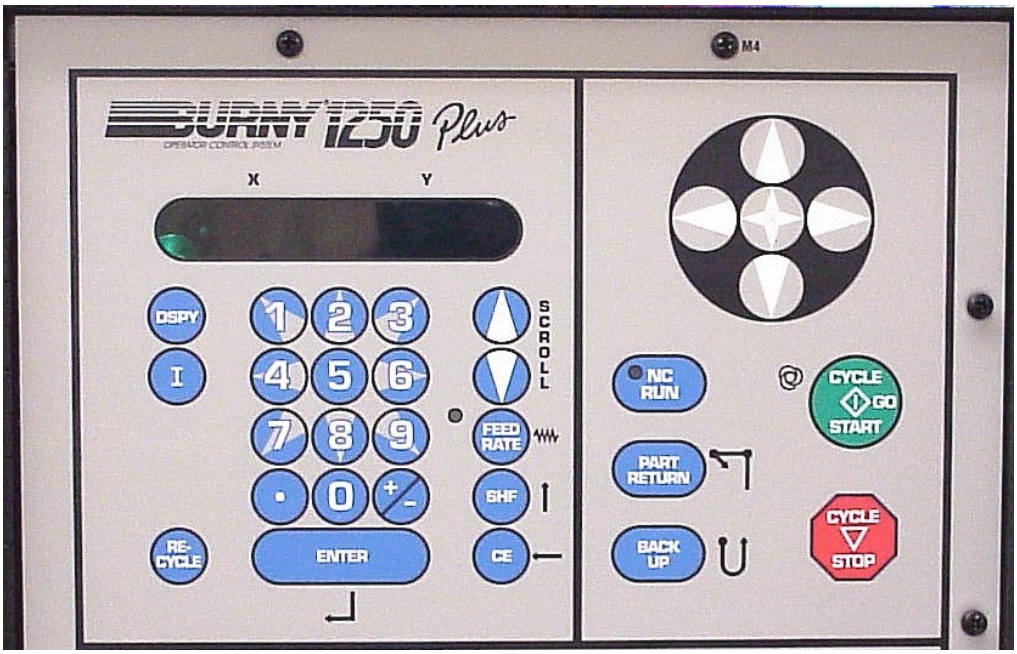

Burny 1250+ Upper Front Panel

The **BURNY 1250 Operator Control System (1250)** is a two-axis (X/Y) numerical control intended for use on a variety of cutting machines. The **1250** has a computer, servo-amplifiers, and machine interface electronics all contained in a single, economical enclosure. The servo drives are high performance PWM amplifiers, which provide superior position and velocity control of the cutting process. The computer and interface electronics are specially designed to withstand the harsh environments of the typical cutting shops.

The **1250** has extensive service and diagnostic utilities, which allow many of the operating values to be displayed and modified. In addition, all setup variables (acceleration rates, speeds, gains, etc.) are stored in non-volatile memory devices, which retain the values permanently.

Programs are entered into the control via the built-in serial port, typically from a host computer or CAD system. A library of STANDARD SHAPES gives the **1250** the ability to load and store various programs in battery-backed NC Program Memory.

The **1250** can operate using either an INCH or METRIC operating system. This selection is made during SETUP AND INSTALLATION. All prompts and system variables are displayed in the selected format.

NOTE: In several places, this manual refers to a value that is entered during SETUP AND INSTALLATION. In these cases, consult the INSTALLATION section of the Burny 1250 Operator Control System Operation and Maintenance Manual, AO-73367 for further details.

SAFETY PRECAUTIONS

As with any tool, sensible care and observation of operating procedures, precautions, and safe practices is required. Failure to observe certain precautions may result in personal injury or damage to the equipment.

The following precautions are general guidelines applicable to working with cutting machines. (More explicit precautions are presented in other sections of this manual.)

GENERAL PRECAUTIONS

1. Authorize only qualified personnel to perform assigned duties and operate or service the machine.
2. Follow all notices, cautions, and warnings labeled on the machine and in this manual.
3. Never attempt any modifications or addition of any apparatus to the machine without consulting a qualified **1250** representative.
4. Ensure the work area is well ventilated. Fumes, dusts, and mists from certain metals are highly toxic.

MACHINE PRECAUTIONS

1. Use this equipment only for its designed and intended purpose.
2. Establish and adhere to a routine preventive maintenance schedule.
3. Ensure that all electrical ground requirements are met before applying power to the machine.
4. Never attempt any service or maintenance with the system power on.

1250 GENERAL OPERATIONS SUMMARY

OPTIONAL LANGUAGE FEATURE

The **1250** has an alternate language that is available as a feature. Normally, the **1250** prompts in English, but there are other languages that can be installed in the unit: French, German, Finnish, Swedish, Spanish, and Portuguese. When the alternate language feature is enabled, the control uses the new language automatically at power-up. For service personnel and in cases where the translation is not clear, however, the prompts may be changed back to English by pressing <SHF> and then <DSPY>. Perform this sequence again to return to the alternate language.

AXIS DEFINITIONS

Several places in this manual refer to the X and Y axes of the machine. These are defined as:

X Axis: The main longitudinal rail axis of the machine. The direction away from you is defined as +X and toward you is -X as you are facing the machine.

Y Axis: The cross or traverse axis of the machine. The direction to the left is defined as +Y and to the right as -Y as you are facing the machine.

APPLYING POWER TO THE MACHINE

There is no power switch on the **1250**. When line voltage is connected, power is appled to the computer portion of the **1250**.

KEYPAD LAYOUT FOR NON-PLUS 1250

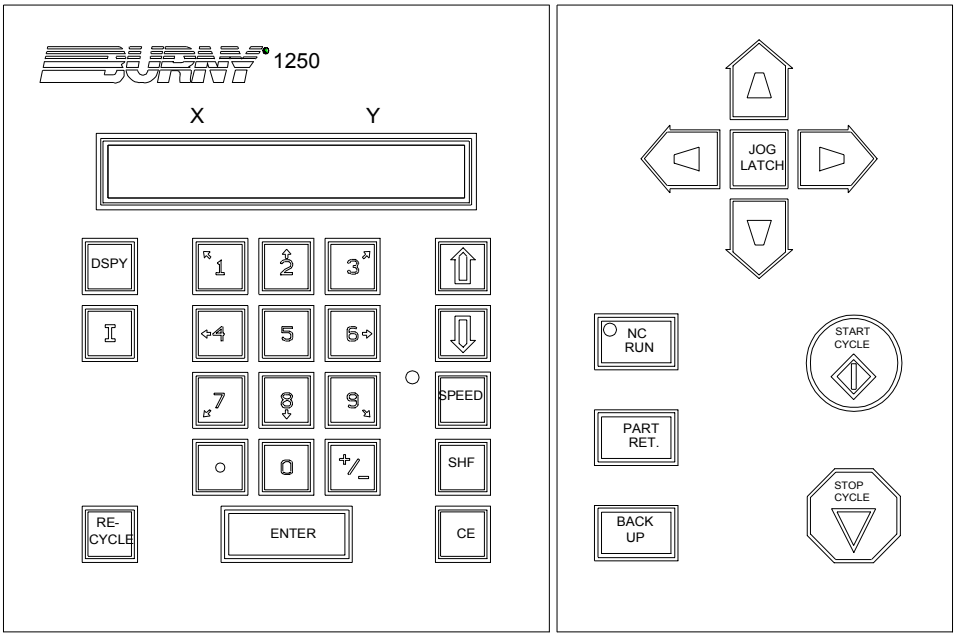

<DSPY>

Press <DSPY> to enter the DISPLAY SELECT MENU function described in the DISPLAY MODES section of the 1250 Operation and Maintenance Manual, AO-73367. Pressing this key does not affect the operation of the machine in any way and so may be used at any time, even while a part is being cut. Once pressed, the current display is removed and the DISPLAY SELECT MENU is presented. Select the desired display (see SCROLLING OPERATIONS). To exit the display mode and resume normal operation, select display DSPY00-EXIT MODE. When this display is selected, the control returns to the operation that was active before the display function was used.

<I>

This special function key is used for manual cutting and several other operations. See the SPECIAL FUNCTIONS section of this manual for more information.

<RECYCLE>

Press <RECYCLE> to stop the current operation, turn off all cutting functions, and return to the beginning prompting sequence. It may be pressed at any time or after an operation is complete.

Numeric Keypad

When you are instructed to enter values for various selections, use the <0> through <9> numerals, along with the <+/-> and <.> (decimal point). If you need to enter a hexadecimal value (A - F), use a two-key combination of <SHF> as follows:

Press <SHF><0> to enter a value of **A**

Press <SHF><1> to enter a value of **B**

Press <SHF><2> to enter a value of **C**

Press <SHF><3> to enter a value of **D**

Press <SHF><4> to enter a value of **E**

Press <SHF><5> to enter a value of **F**

If you need a negative value, first enter the number and then press the <+/-> key to make it negative.

If an incorrect value is entered, press the clear entry key <CE> to clear the value and enter the correct value.

Once the correct value is displayed, press <ENTER> to continue.

<ENTER>

Press <ENTER> to accept information (an entered value or display selection) and continue.

Up and Down Scroll Arrow Keys

Use the UP and DOWN scroll arrow keys, located below (and on the right side of) the display, to scroll through a displayed menu.

The LED located just below and to the left of the arrow keys lights when a menu of choices is available, and shows that the scroll arrow keys may be used to make the selection.

Some menus use numbers to further identify each item. You can then either scroll to the desired selection or enter the appropriate number.

When the correct selection is displayed, press <ENTER> to accept the selection and continue.

<SPEED>

The **1250** contains a speedpot, which provides infinite adjustments of machine speed, between zero (0) and the maximum speed of the drive. Select the maximum limits for the speedpot through a three-position range switch, as follows:

- Choose HIGH SPEED when you want 0 - 100% of the maximum speed.
- Choose LOW SPEED when you want 0 - 50% of the maximum speed.

- Choose ZERO SPEED when you want to stop machine motion without pressing the <CYCLE STOP> key.

The **1250** also has a programmable feedrate option, which allows the feedrate to be controlled from the part program. The feedrate option must be enabled in SD62-SYS CONFG2 (see INSTALLATION AND SETUP section of the 1250 Operation and Maintenance Manual, AO-73367). You can then control the cutting speed while operating by entering a digital feedrate or through programming by inserting feedrate commands in the part program. The traverse speed (used to get from one cut to the next) is preset during installation. This allows the feedrate to be set at a slow rate of speed during the cutting process and still move at a high rate of speed to get from one part to the next.

Press <SPEED> or select DSPY03 to display the current feedrate. You may then alter the programmed value by either scrolling or entering the new feedrate on the keypad. Press <ENTER> to continue. Press <SPEED> again to return to normal prompting.

<SHF>

The <SHF> key is always used in combination with another keystroke, as described in other sections.

<CE>

Press the <CE> key to clear an incorrect entry. The correct data may then be entered.

Jog Controls

In order to help position the machine, the **1250** provides a front panel jog function. Press any of the four jog arrow keys to initiate the jog operation. The machine jogs in the selected direction, at cutting speed, as long as the arrow key is pressed. When you release the arrow key, the jog decelerates to a stop.

You may initiate a high speed jog (traverse speed) by pressing <SHF> before you choose the jog direction. The machine then moves at the maximum traverse speed regardless of the feedrate setting (unless the feedrate is set to 0.00, which causes the machine to stop). The scroll LED will flash, indicating the high speed jog mode. Press <SHF> again to return to the normal jog mode, or it will cancel automatically after two seconds.

In the middle of the four jog arrow keys is <JOG LATCH>. This allows the machine to continue to move in a selected direction without holding in the jog arrow key. Press <JOG LATCH> and, within two seconds, press one of the four jog arrow keys. The machine moves in the selected direction at cutting speed. Press <0>, <STOP>, or <RECYCLE> to stop movement.

NOTE: The latched jog feature may be disabled with SD62-SYSCONFG2. See INSTALLATION AND SETUP section of the 1250 Operation aND MAINTENANCE MANUAL, AO-73367. Also, the high speed jog is not available with a latched jog.

<NC RUN>

The LED on <NC RUN> should always be on. If it is off, the machine stops cutting and performing other functions. You may use the JOG keys, but cannot perform other operations. Press <NC RUN> to toggle the LED to on.

<PART RETURN>

This key is used only when you have selected a program for running.

Press the <PART RETURN> key to return to one of three starting positions on a part, in cases where the cut was lost or must be re-done over a portion of the part. One press returns to the most recent pierce point. Two presses returns to the start point of the current part. Three presses returns to the home position on the selected cutting table.

Press <SHF> <PART RETURN> to return to the Table #1 0,0 home reference position.

<BACK UP>

Press and hold the <BACK UP> key to stop the cutting process and retrace the cut path in reverse. Once you reach the point where you want to re-start a lost cut, release the <BACK UP> key. The program will continue from that point.

<CYCLE START>

Press <CYCLE START> to start machine motion for automatic cutting or when prompted.

<CYCLE STOP>

Press <CYCLE STOP> to stop machine motion for automatic cutting, before pressing <BACK UP>, or when prompted.

<LIFTER>

When needed, this switch allows you to raise and lower torches with the motorized lifter.

<CLUTCH>

The <CLUTCH> switch is wired to the motor connectors on the back of the **1250**. Use this switch when you need control of the machine clutches, which are used to disengage the axes' motors from the machine.

<E-STOP>

The <E-STOP> button, located on the side of the **1250**, stops drive motion and removes power from cutting relays. It is intended for an emergency only.

NOTE: Activating the <E-STOP> does not remove power from the computer portion of the **1250**. This allows you to unlatch the <E-STOP> and continue cutting operations with no loss of X/Y position or program block location. If power is lost, the computer in the **1250** loses power and all position data are lost.

MAIN FUNCTION SELECTION MENU

The FUNCTION SELECTION MENU is the starting point for all machine operations. At any time, during any operation, you can press the <RECYCLE> key to abort the current operation and return to this top level of prompting.

When you press the <RECYCLE> key, the display sequences through:

SELECT--FUNCTION
RUN- PROGRAM
USE SCROLL--
-- TO SELECT

The **RUN PROGRAM** function is the default when power is applied to the **1250**. The default function then becomes the last function used. Select other functions by using the UP and DOWN scroll arrow keys or by pressing the appropriate number associated with that function. The selections are as follow:

1	RUN- PROGRAM	Runs the current program
2	LOAD- STD. SHAPE	Loads a program from the STANDARD SHAPE LIBRARY
3	LOAD- FROM RS-232	Loads a program from an RS-232 device
4	STORE- TO RS-232	Stores a program to an RS-232 device
6	DELETE- PROGRAM	Deletes a program from NC Program Memory
7	EDIT / NEW- PROGRAM	Creates or edits a program in NC Program Memory
.	STORE TO FLOPPY	Stores a program to a floppy drive. Feature must be enabled.
+/-	LOAD FROM FLOPPY	Loads a program from a floppy drive. Feature must be enabled.
3 SHF	LOAD/RUN RS-232	Two key sequence; press <3> and then <SHF>. Loads and immediately runs a program from an RS-232 device.
+/- SHF	LOAD/RUN FROM FLOPPY	Two key sequence; press <+/-> and then <SHF>. Loads and immediately runs a program from a floppy drive. Feature must be enabled.

These function selections are described in the sections that follow.

RUN PROGRAM

When you select this function, the screen displays the prompt **PRGM=00000000.** Enter a different program number via the numeric keypad or use the UP and DOWN scroll arrow keys to scroll through part numbers in NC Program Memory. Press <ENTER> to select the program number.

The **1250** then searches NC Program Memory for a part that has been assigned that program number. If the part program exists, the run prompting begins. See RUNNING THE PROGRAM. If the part program is not found, an error message (**PGM NOT FOUND**) is displayed, and the program selection must be repeated.

LOAD- FROM STD SHAPE

When you select this function, the screen displays the prompt **PRGM=00000000.** Enter a program number (up to eight digits) that will be assigned to your part program and press <ENTER>. Then select the desired shape from the menu that is displayed, either by entering the number directly, or by using the UP and DOWN scroll arrow keys to scroll to the desired shape. Once the shape has been selected and all data have been entered, the shape is assigned your part program number and placed in NC Program Memory.

The STANDARD SHAPE LIBRARY contains 53 generic shapes to choose from. See the STANDARD SHAPE SELECTION section for further details.

LOAD- FROM RS-232

When you select this function, the screen displays the prompt **PRGM=00000000**. Enter a program number (up to eight digits) that will be assigned to your part program and press <ENTER> to start the loading process from the serial port to the **1250** NC Program Memory.

If the selected program number is not already assigned in NC Program Memory, you will be prompted for additional information pertaining to serial communications. (See SERIAL COMMUNICATIONS for further information.)

If the program number is already assigned in NC Program Memory, an error message (**DUP PGM=**########) is displayed. Either enter a different number or leave this function, delete the existing program, and return to the LOAD operation.

STORE- FROM RS-232

When you select this function, the screen displays the prompt **PRGM=00000000**. Enter a program number (up to eight digits) that will be assigned to your part program and press <ENTER> to start the store process from **1250** NC Program Memory, out the serial port, to a host storage device.

DELETE- PROGRAM

When you select this function, the screen displays the prompt **PRGM=**00000000. Enter the program number of the part to be deleted, either by entering the number directly from the numeric keypad, or by using the UP and DOWN scroll arrow keys to scroll to the program number in NC Program Memory. Press <ENTER> to delete the program.

You can delete all programs in NC Program Memory by entering the program number **00000000**. When you press <ENTER>, the prompt **YES ERASE ALL NO** is displayed to make sure that is what you want to do. Press the <+/-> key to toggle between the flashing **YES** and **NO**.

To abort the delete operation, make sure **NO** is flashing and then press <ENTER>. The control aborts the erase procedure and no programs are deleted.

To erase all the programs, make sure **YES** is flashing and then press <ENTER>. Since this operation is irreversible, another prompt **NO YOU SURE YES** is displayed. Press the <+/-> key to toggle between the flashing **YES** and **NO**. This minimizes the chances of an accidental erasure. If you select **YES** and press <ENTER>, the programs are erased, and the screen displays **PROGRAMS DELETED.**

EDIT/NEW- PROGRAM

The EDIT/NEW function allows you to edit a part program that resides in NC Program Memory. You can also use the EDIT/NEW function to create a new part. See the EDITOR section for further information.

STORE- TO FLOPPY

Use STORE- TO FLOPPY to save a part program to an external portable floppy drive connected to the serial port. See FLOPPY DRIVE in the UTILITIES section for additional information.

LOAD- FROM FLOPPY

Use LOAD- FROM FLOPPY to load part programs from an external portable floppy drive connected to the serial port. See FLOPPY DRIVE in the UTILITIES section for additional information.

LOAD/RUN RS-232

Use LOAD/RUN RS-232 to load a part program from the serial port to NC Program Memory, and immediately run that part program. It can also automatically delete the program after it has been cut and reload the next. See LOAD- FROM RS-232.

LOAD/RUN FROM FLOPPY

Use LOAD/RUN FROM FLOPPY to load a part program from a floppy to NC Program Memory and immediately run that part program. See LOAD FROM FLOPPY.

STANDARD SHAPE SELECTION

SHAPE SELECTION

The **LOAD- FROM STD. SHAPE** function allows you to select a generic part from the STANDARD SHAPE LIBRARY and create a part program.

Press <ENTER>. The display changes to **LOAD- 00000000**. Enter a part program number that will be used to store the part you create in NC Program Memory. Once a program number is entered, the shape selection process begins.

The **1250** shape library contains 53 shape programs, which are referenced by shape number. You must first select the desired shape from the following chart, either by using the UP and DOWN scroll arrow keys to scroll to the shape, or by entering the desired number directly. Once the correct number and name are displayed, press <ENTER> to select the shape.

Detailed drawings of each shape are located at the end of this section. These give additional information about the various options for each shape and illustrate the required dimension inputs.

The STANDARD SHAPE programs are written in a GENERIC format, which describes the shape of the part, but leaves the part dimensions variable. Once you select the shape, you are required to answer a series of prompts that determine the final dimensions of the part. The individual shape drawings at the end of this section help to illustrate the various dimensions. These drawings should be referred to when answering the various prompts.

If a dimension is requested, use the numeric keypad along with the decimal point. (Use <CE> to clear the entry if you make a mistake.) Once it is correct, press <ENTER>. Since the **1250** can operate in either a metric or inch system, the standard units for the dimensions are those selected for the operating system during installation by SD60. The dimensions can be entered in either unit, however, by using a special key sequence. In this way, an occasional metric part can be entered directly even though the system is set for inch units.

To enter a dimension in the opposite unit from the system default, press <SHF> first. The displayed value is converted to the opposite unit and the number of decimal places changes (two for inch: 0.00 and one for millimeters: 0.0). Pressing the same key again changes the value back to the original unit. This key only changes the value being entered and does not switch the units for the entire system. Each dimension must be converted individually as required.

If a count (such as number of holes) or other integer value is requested, use the numeric keypad to enter the desired number. Once the value is correct, press <ENTER>.

If a selection such as CW/CCW, YES/NO, etc., is requested, the displayed response may be toggled by using the +/-> key. Press <ENTER> when the correct response is displayed. If a start point or repeat direction is requested, use the outside row of keys on the numeric keypad to indicate the correct corner or direction. Once the correct direction is indicated on the readout, press <ENTER>. Invalid entries for a particular prompt are ignored.

Start point or repeat directions are as follows:

- Top / left: use the <1> key
- Top / up: use the <2> key
- Top / right: use the <3> key
- Left: use the <4> key
- Right: use the <6> key
- Bottom / left: use the <7> key
- Bottom / down: use the <8> key
- Bottom / right: use the <9> key

Once all the prompts are answered, a verification prompt is displayed (**YES+ VERIFY +NO**). To verify the input data, which starts the prompting over again, press <+/-> one time to cause the **YES** to begin flashing. Then press <ENTER> to review the input data. Use the <ENTER> key to step through the prompts, and correct any values as needed.

After all prompts have been answered correctly, the **1250** creates the part program. The following prompts are displayed:

*** COMPUTING ***	(The input data is being processed.)
PROGRAM LOADED	(The program has been created.)

Press <RECYCLE> to return to the MAIN FUNCTION MENU. Go to RUNNING THE PART in this manual for directions on running the program.

DIMENSIONS COMMON TO MOST SHAPES

In addition to the actual dimensions of the part, most of the 53 shape programs also prompt for kerf, scrap, lead-in, and lead-out.

Since all controls are equipped with an optional DIAL-IN-KERF feature, the value of 0.00 should be entered for the kerf prompt during the dimension entry (see exceptions below). By entering 0.00 at this point, the DIAL-IN-KERF feature can be used when the part is actually cut to enter and adjust the kerf dimension as needed. If a kerf value other than 0.00 is entered during the dimension prompting of a standard shape, it is permanently added to the part dimensions, and the DIAL-IN-KERF feature is by-passed when the part is cut. Consequently, the kerf cannot be adjusted and the entire part must be re-entered to change it.

Most of the standard shapes also prompt for a scrap dimension, which is the space left between successive rows of parts. Since the DIAL-IN-KERF feature does not increase the part-to-part spacing, the SCRAP value must allow for enough material to accommodate the anticipated KERF plus the desired amount of actual material to be left between the rows of parts.

NOTE: On any CHAIN CUT parts, such as WEDGE PAIR or CHAIN RECTANGLE, the kerf must be entered along with the part dimensions during program creation. This is due to the common side cutting and nesting which is done on these parts. Regardless of the kerf entered, the DIAL-IN-KERF will not function on these parts.

The SCRAP value provides the spacing between parts as they are repeated down the plate. The accuracy of this scrap dimension is just as good as the actual part itself; therefore the value can be set fairly small with good results. Typical SCRAP values can be anywhere between .1 inch to .5 inch (2.5 millimeters to 12 millimeters). Note that the SCRAP dimension must allow for the anticipated cutting kerf if the DIAL-IN-KERF feature is to be used when the part is cut.

The LEAD-IN dimension is the distance from the part to the pierce point. Since the piercing operation is sometimes unpredictable, the lead-in dimension should be set so that the plate is pierced and the cut has stabilized before it reaches the actual part. Normal values range from .25 inch to 1.00 inch (6 millimeters to 25 millimeters).

The LEAD-OUT dimension causes the torch to cut away from the part before the cutting oxygen is turned off. This prevents any damage to the cut part due to the bleed-off characteristics of the torch. In addition, on heavy plate cutting, the LEAD-OUT move guarantees that the bottom of the part has been cut completely before the oxygen is turned off. Normal values are from .5 inch to 1.00 inch (12 millimeters to 25 millimeters).

53 STANDARD SHAPES

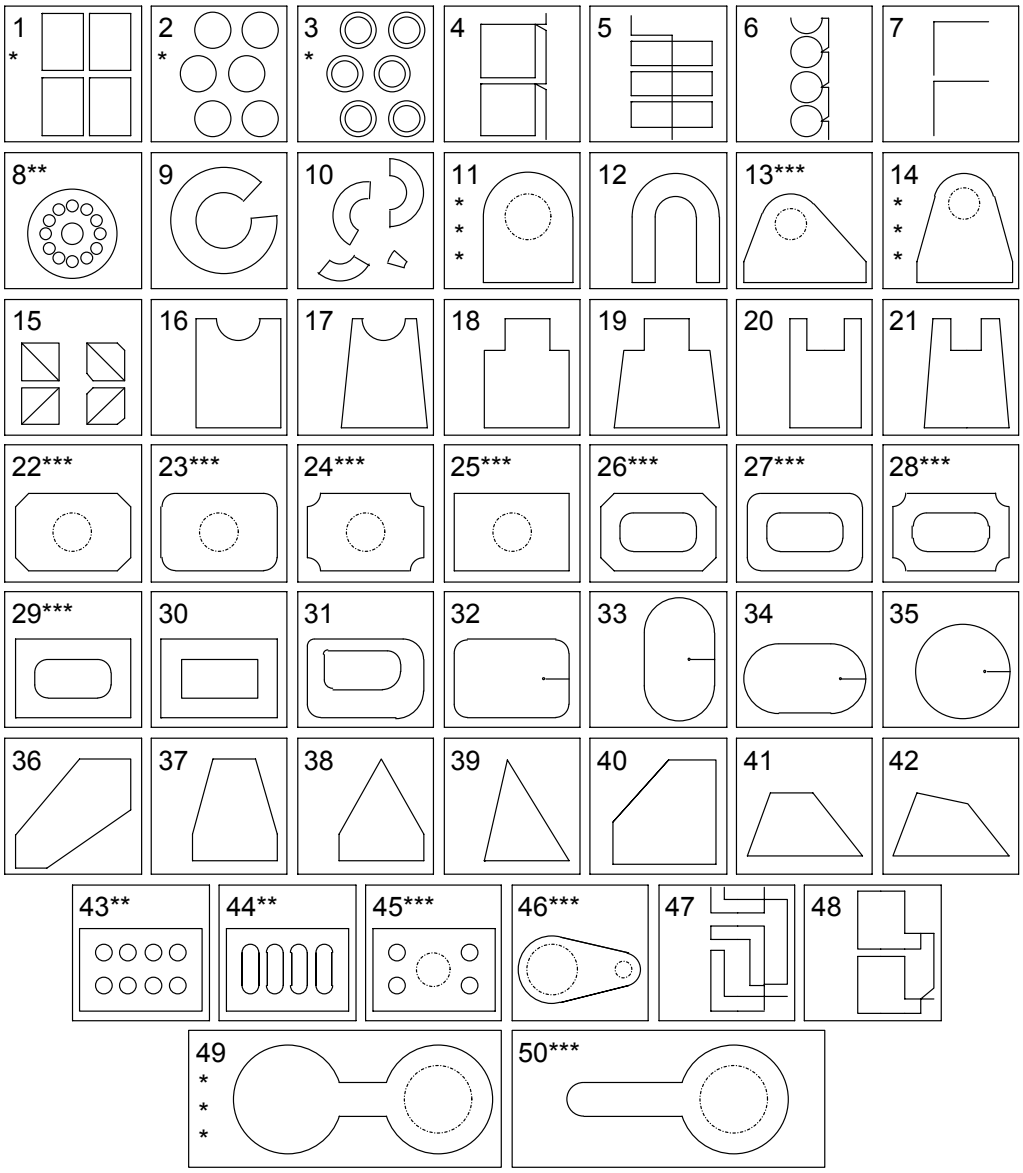

SHAPES 51, 52, AND 53 ARE ENHANCED VERSIONS OF SHAPES 1, 2, AND 3

* SELECTABLE START POSITION, CW/CCW CUTTING, AND SELECTABLE REPEAT MODE AND DIRECTION.

** ALLOWS SELECTION OF ANY NUMBER OF HOLES.

*** DASHED HOLES ARE OPTIONAL. CORNER RADIUS VALUES MAY BE SET TO 0 FOR SHARP CORNERS.

SHAPE 1 : RECTANGLE

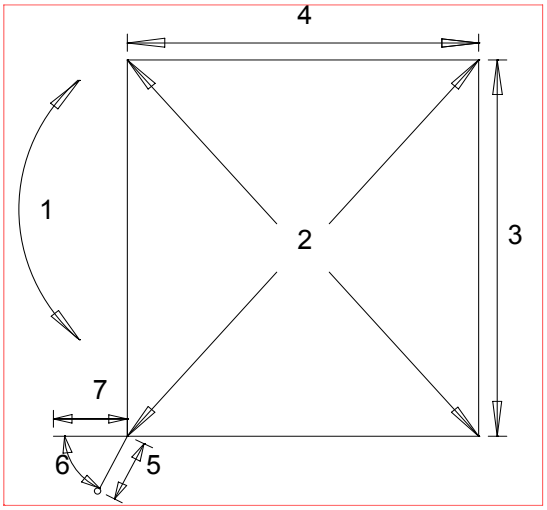

REPEAT PATTERNS

AUTO MANUAL

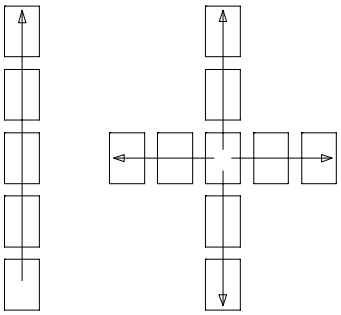

1. CUT DIRECTION : (Clockwise or Counter-clockwise)
2. STARTING POSITION : (1 of 4 corners)
3. X DIMENSION : (Inches or millimeters)
4. Y DIMENSION : (Inches or millimeters)
5. LEAD-IN DIMENSION : (Inches or millimeters)
6. LEAD-IN ANGLE (DEGS) : (0 to 90 degrees)
7. LEAD-OUT DIMENSION : (Inches or millimeters)
8. SCRAP DIMENSION : (Distance between parts, in/mm)
9. KERF DIMENSION : (Width of cutting tool path)
10. REPEAT MODE : (Automatic or manual positioning)

IF AUTO REPEAT MODE:

11. VERIFY- YES/NO
12. VERIFY- YES/NO

IF MANUAL REPEAT MODE:

11. Repeat direction: (1 of 4 sides)

NOTES:

- The STARTING CORNER and REPEAT DIRECTION parameters can be directly entered with the numeric keypad. Direction arrows are provided for quick reference.
- When defining the LEAD-IN ANGLE, 0 degrees is parallel to the Y axis and 90 degrees is parallel to the X axis.
- The LEAD-OUT position is determined by the direction of the cut. It is either parallel to the last side cut (as shown) or 45 degrees from the last cut direction.
- When running the resulting NC part program, position the torches at the STARTING CORNER of the first part, regardless of the REPEAT MODE selected. From this corner, the program moves out to the actual pierce point.

SHAPE 2 : CIRCLE

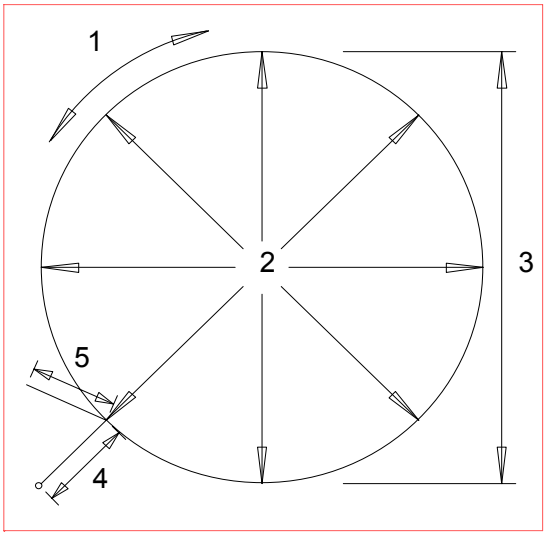

REPEAT PATTERNS

AUTO MANUAL

PLATE SIDE

LEFT RIGHT

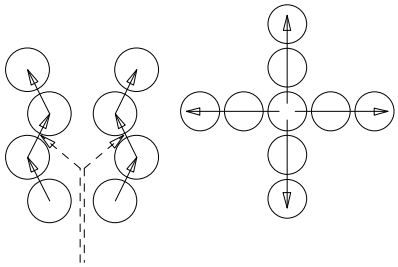

60 DEGREE ANGLE TO CENTERS

1. CUT DIRECTION (OD) : (Clockwise or counter-clockwise)
2. STARTING POSITION : (1 of 8 points)
3. DIAMETER DIMENSION : (Inches or millimeters)
4. LEAD-IN DIMENSION : (Inches or millimeters)
5. LEAD-OUT DIMENSION : (Inches or millimeters)
6. SCRAP DIMENSION : (Distance between parts, in/mm)
7. KERF DIMENSION : (Width of cutting tool path)
8. REPEAT MODE : (Automatic or manual positioning)

IF AUTO REPEAT MODE:
9. VERIFY- YES/NO

IF MANUAL REPEAT MODE:
9. Repeat direction: (1 of 4 points)
10. VERIFY- YES/NO

NOTES:

- The STARTING POSITION and REPEAT DIRECTION parameters can be directly entered with the numeric keypad. Direction arrows are provided for quick reference.
- The actual LEAD-OUT position is determined by the direction of the cut. The figure above shows the LEAD-OUT position assuming a clockwise cutting direction has been selected.
- When running the resulting NC part program, position the torches at the CENTER of the first part, regardless of the REPEAT MODE selected. From this position, the program moves out to the actual pierce point.
- When performing AUTO REPEAT mode operations, parts are shifted to the left and right at a 60 degree angle to minimize the amount of scrap between parts.

SHAPE 3 : RING

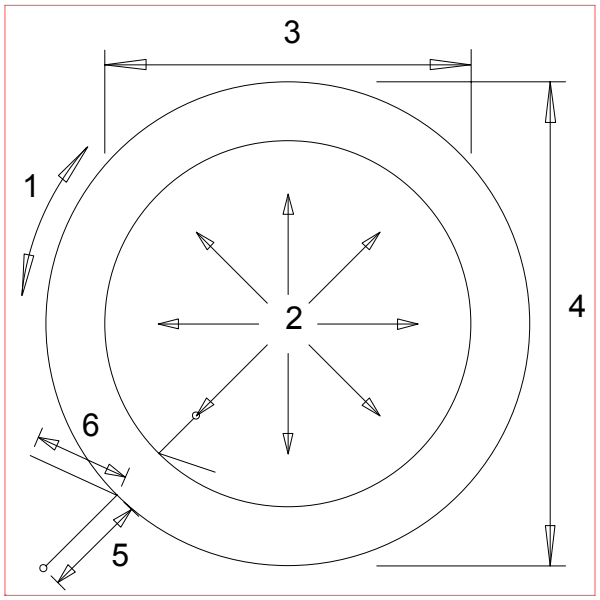

REPEAT PATTERNS

AUTO MANUAL

PLATE SIDE

LEFT RIGHT

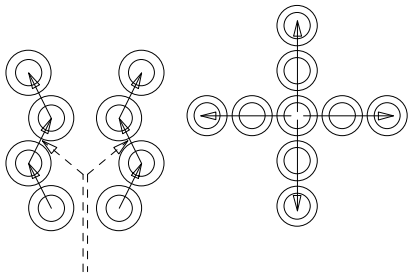

60 degree angle to centers

1. CUT DIRECTION (OD) : (Clockwise or counter-clockwise)
2. STARTING POSITION : (1 of 8 points)
3. INNER DIAMETER SIZE : (Inches or millimeters)
4. OUTER DIAMETER SIZE : (Inches or millimeters)
5. LEAD-IN DIMENSION : (Inches or millimeters)
6. LEAD-OUT DIMENSION : (Inches or millimeters)
7. SCRAP DIMENSION : (Distance between parts, in/mm)
8. KERF DIMENSION : (Width of cutting tool path)
9. REPEAT MODE : (Automatic or manual positioning)

IF AUTO REPEAT MODE:

10. VERIFY- YES/NO

IF MANUAL REPEAT MODE:

10. Repeat direction: (1 of 4 points)
11. VERIFY- YES/NO

NOTES:

- The CUT DIRECTION prompt defines the outer diameter cut direction. The inner direction is always opposite so that the same KERF side (LEFT/RIGHT) can be used for both cuts.
- The STARTING POSITION and REPEAT DIRECTION parameters can be directly entered with the numeric keypad.
- The actual LEAD-OUT position is determined by the direction of the cut. The figure above shows the LEAD-OUT position assuming a clockwise cutting direction has been selected.
- When running the resulting NC part program, position the torches at the CENTER of the first part, regardless of the REPEAT MODE selected.
- When performing AUTO REPEAT mode operations, parts are shifted to the left and right at a 60 degree angle.

SHAPE 4 : CHAIN RECTANGLE 1

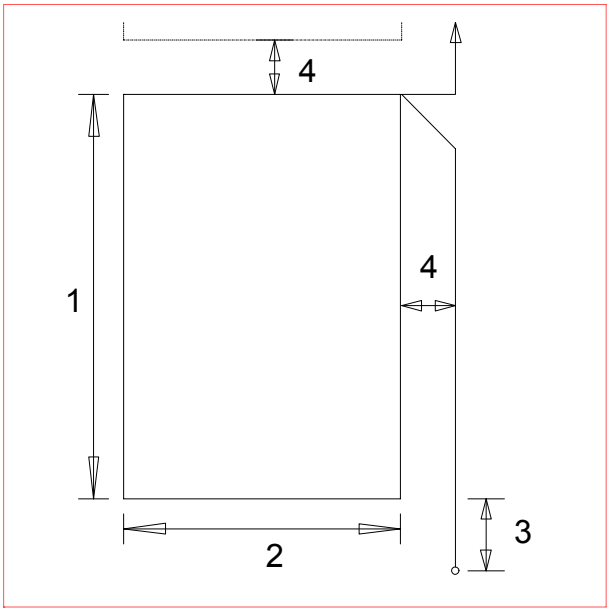

REPEAT PATTERNS

PLATE SIDE

LEFT RIGHT

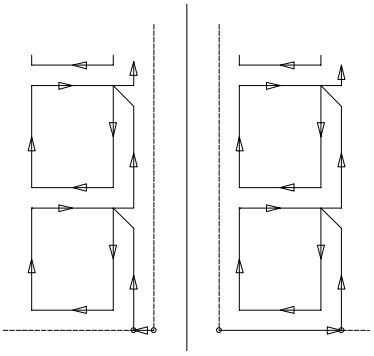

1. X DIMENSION : (Inches or millimeters)
2. Y DIMENSION : (Inches or millimeters)
3. LEAD-IN DIMENSION : (Inches or millimeters)
4. SCRAP DIMENSION : (Distance between parts, in/mm)
5. KERF DIMENSION : (Width of cutting tool path)
6. VERIFY- YES/NO : (YES or NO)

NOTES:

- All chain cut parts start from the plate corner closest to the operator. The PLATE SIDE is defined through SYSTEM SETUP DATA.

SHAPE 5 : CHAIN RECTANGLE 2

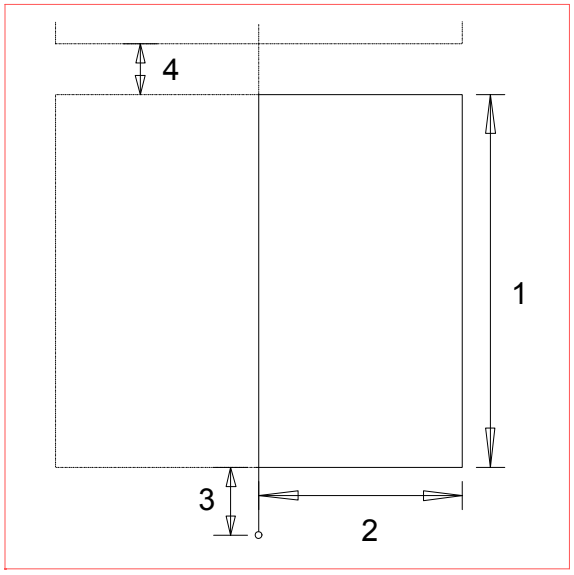

REPEAT PATTERNS

PLATE SIDE

LEFT RIGHT

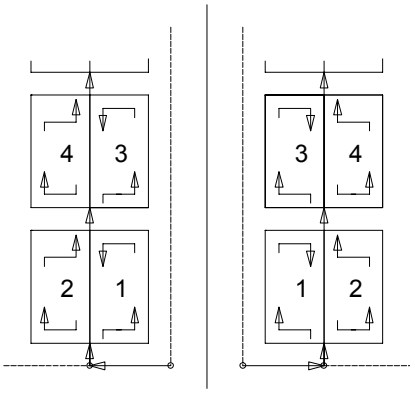

1.	X DIMENSION	:	(Inches or millimeters)
2.	Y DIMENSION	:	(Inches or millimeters)
3.	LEAD-IN DIMENSION	:	(Inches or millimeters)
4.	SCRAP DIMENSION	:	(Distance between parts, in/mm)
5.	KERF DIMENSION	:	(Width of cutting tool path)
6.	VERIFY- YES/NO	:	(YES or NO)

NOTES:

- All chain cut parts start from the plate corner closest to the operator. The PLATE SIDE is defined through SYSTEM SETUP DATA.
- The part cutting order also depends on the PLATE SIDE value. The part closest to the corner of the plate is always cut first, as shown under REPEAT PATTERNS.
- Although the REPEAT PATTERN creates parts in pairs to minimize scrap and reduce cutting time, each part is individually counted when cut.

SHAPE 6 : CHAIN CIRCLE

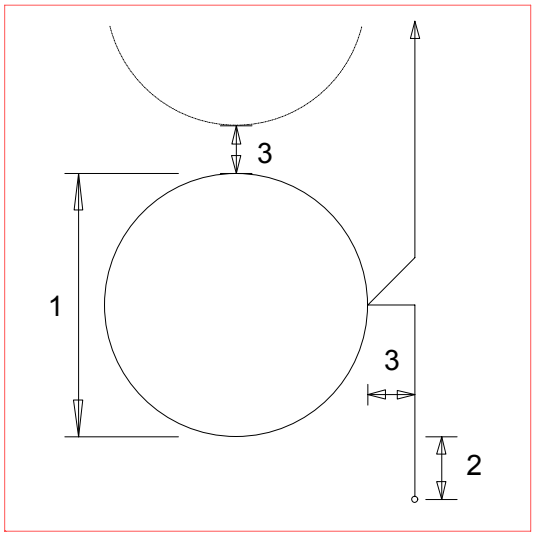

REPEAT PATTERNS

PLATE SIDE

LEFT RIGHT

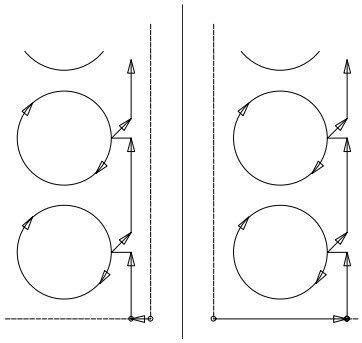

1. DIAMETER DIMENSION : (Inches or millimeters)
2. LEAD-IN DIMENSION : (Inches or millimeters)
3. SCRAP DIMENSION : (Distance between parts, in/mm)
4. KERF DIMENSION : (Width of cutting tool path)
5. VERIFY- YES/NO : (YES or NO)

NOTES:

- All chain cut parts start from the plate corner closest to the operator. The PLATE SIDE is defined through SYSTEM SETUP DATA.

SHAPE 7 : RIP MODE

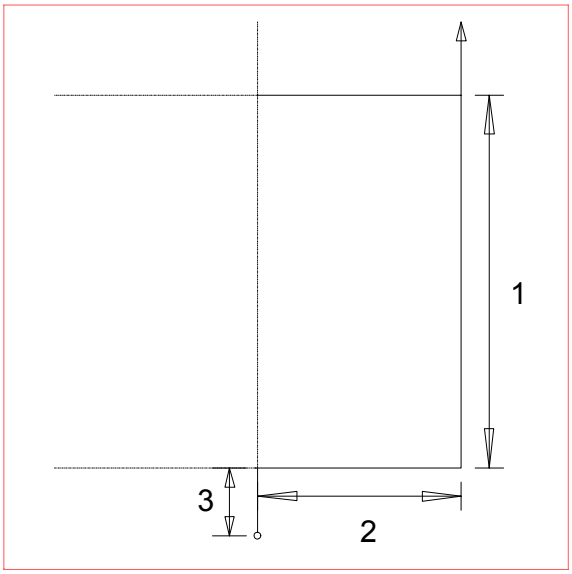

REPEAT PATTERNS

PLATE SIDE

LEFT RIGHT

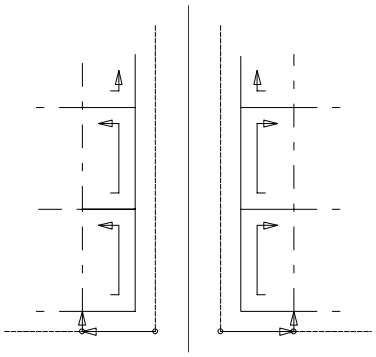

1. X DIMENSION : (Inches or millimeters)
2. Y DIMENSION : (Inches or millimeters)
3. LEAD-IN DIMENSION : (Inches or millimeters)
4. SCRAP DIMENSION : (Distance between parts, in/mm)
5. KERF DIMENSION : (Width of cutting tool path)
6. VERIFY- YES/NO : (YES or NO)

NOTES:

- This part is designed for use with multiple torches.
- All RIP MODE cuts start at the corner of the plate closest to the operator. The PLATE SIDE is defined through SYSTEM SETUP DATA.
- The cutting sequence also depends on the PLATE SIDE value. After moving away from the corner, a cut is made back towards the corner, as shown under REPEAT PATTERNS.

SHAPE 8 : FLANGE

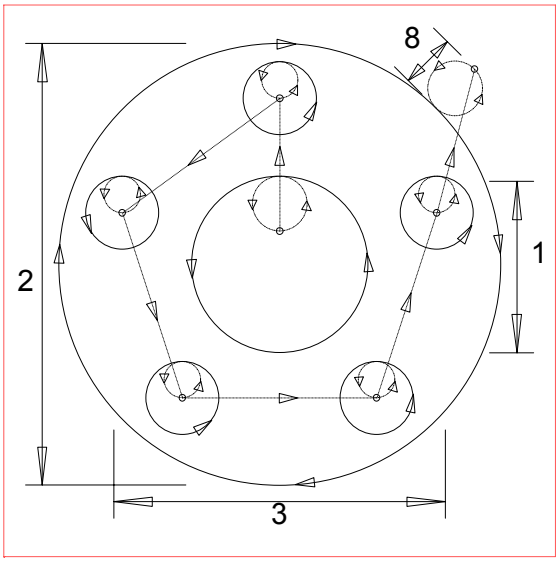

REPEAT PATTERNS

PLATE SIDE

LEFT RIGHT

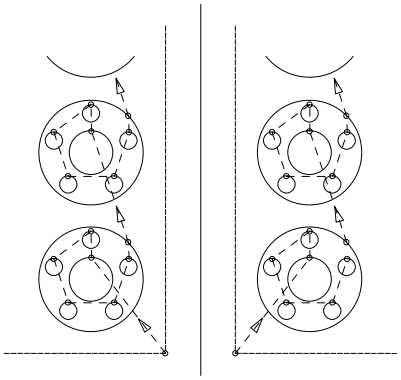

1. INNER DIAMETER SIZE : (Inches or millimeters)
2. OUTER DIAMETER SIZE : (Inches or millimeters)
3. BOLT CENTER DIAMETER : (Inches or millimeters)
4. BOLT HOLE DIAMETER : (Inches or millimeters)
5. NUMBER OF BOLTS : (Count, 0 to 99)
6. KERF DIMENSION : (Width of cutting tool path)
7. SCRAP DIMENSION : (Distance between parts, in/mm)
8. LEAD-IN DIMENSION : (Inches or millimeters)
9. VERIFY- YES/NO : (YES or NO)

NOTES:

- If an INNER DIAMETER of 0 is defined, no center hole is cut.
- If the NUMBER OF BOLTS is defined as 0, no bolt holes are cut.
- Only the INNER DIAMETER and the OUTER DIAMETER cuts use the LEAD-IN DIMENSION as the diameter of the circular lead-in. The lead-in distance for the bolt holes is automatically set to 1/2 of the BOLT HOLE DIAMETER value.

SHAPE 9 : SPLIT RING

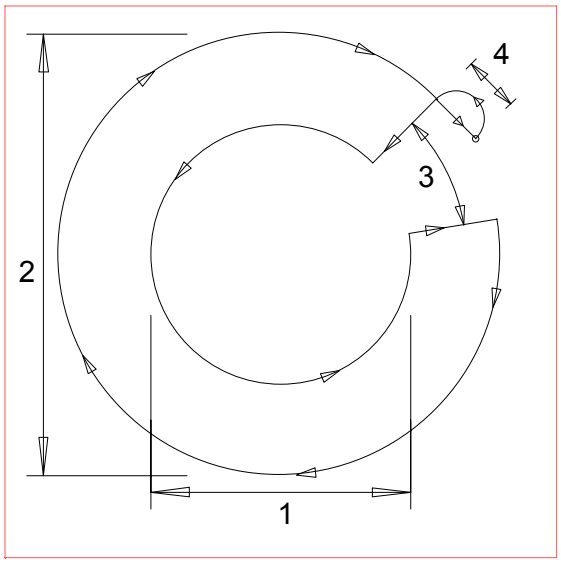

REPEAT PATTERNS

PLATE SIDE

LEFT RIGHT

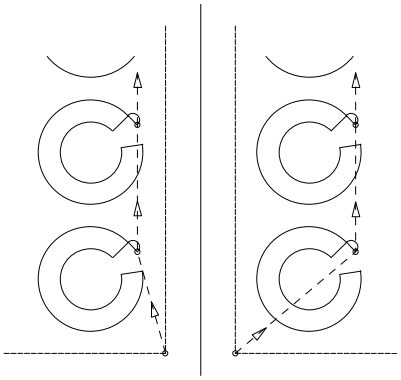

1. INNER DIAMETER SIZE : (Inches or millimeters)
2. OUTER DIAMETER SIZE : (Inches or millimeters)
3. SPLIT DEGREES : (Degrees
4. LEAD-IN DIMENSION : (Inches or millimeters)
5. KERF DIMENSION : (Width of cutting tool path)
6. SCRAP DIMENSION : (Distance between parts, in/mm)
7. VERIFY- YES/NO : (YES or NO)

NOTES:

- The starting position is always at the 45 degree position as shown.
- The ending position is determined by the SPLIT DEGREES value.
- The actual spacing between parts is based on the assumption that SPLIT DEGREES is less than 135 degrees. If not, the scrap between parts may be excessive. Therefore smaller arc segments should be cut using shape 10, RING DEGREES..

SHAPE 10 : RING DEGREES

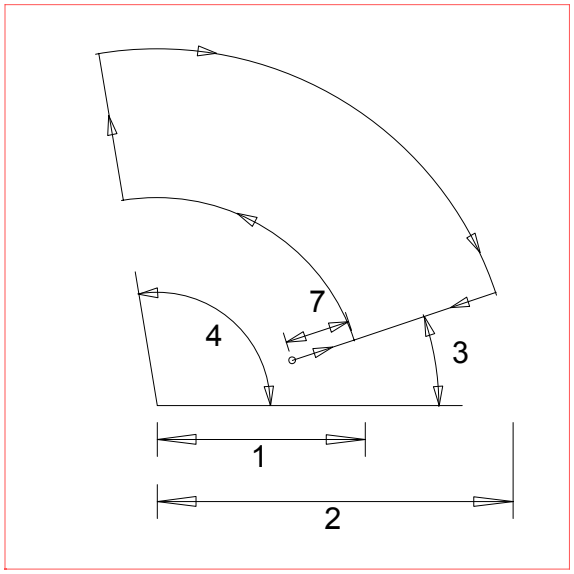

REPEAT PATTERNS

MANUAL REPEAT

ALL DIRECTIONS ALLOWED

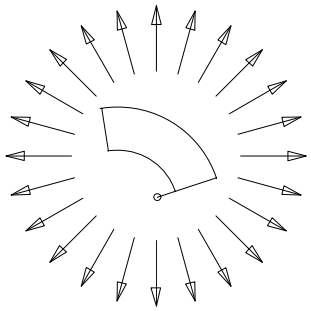

1. INSIDE RADIUS SIZE : (Inches or millimeters)
2. OUTSIDE RADIUS SIZE : (Inches or millimeters)
3. STARTING DEGREES : (Degrees)
4. ENDING DEGREES : (Degrees)
5. CROSS REPEAT DISTANCE : (Y distance to next part)
6. RAIL REPEAT DISTANCE : (X distance to next part)
7. LEAD-IN DIMENSION : (Inches or millimeters)
8. KERF DIMENSION : (Width of cutting tool path)
9. VERIFY- YES/NO : (YES or NO)

NOTES:

- The STARTING DEGREES and ENDING DEGREES values represent angular position with respect to the Y axis (0 degrees is parallel to the Y axis and 90 degrees is parallel to the X axis).
- The REPEAT DISTANCE parameters define the distance from the start of one part to the next. These values must be large enough to provide the necessary SCRAP between parts.
- When running the resulting NC part program, the machine moves from the starting corner to the pierce point defined by the LEAD-IN DIMENSION.
- The lead-out distance is automatically set to 1/2 of the LEAD-IN DIMENSION.

SHAPE 11 : STRAIGHT LUG

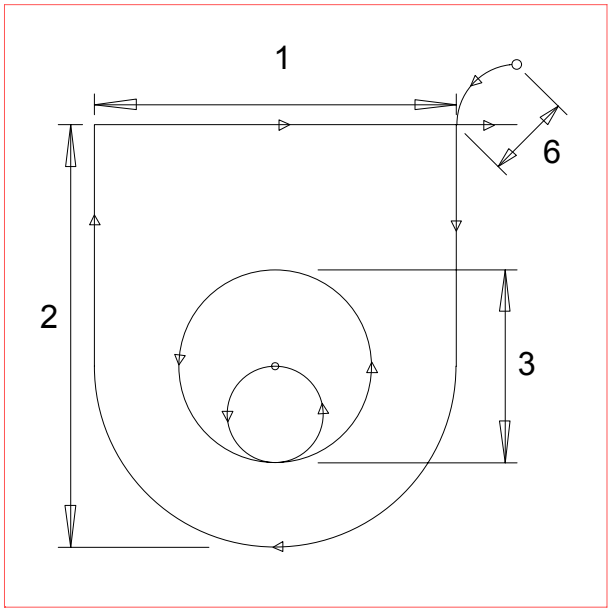

REPEAT PATTERNS

PLATE SIDE

LEFT RIGHT

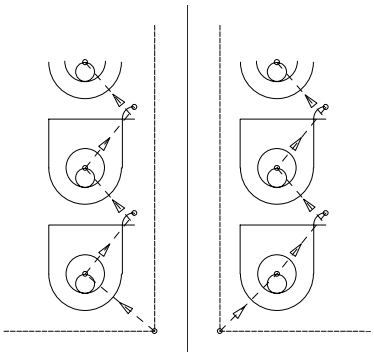

1. WIDTH DIMENSION : (Inches or millimeters)
2. HEIGHT DIMENSION : (Inches or millimeters)
3. HOLE DIAMETER : (Inches or millimeters)
4. KERF DIMENSION : (Width of cutting tool path)
5. SCRAP DIMENSION : (Distance between parts, in/mm)
6. LEAD-IN DIMENSION : (Inches or millimeters)
7. VERIFY- YES/NO : (YES or NO)

NOTES:

- If a HOLE DIAMETER of 0 is defined, no center hole is cut.
- The lead-in distance for the center hole is automatically set to 1/2 of the HOLE DIAMETER value.

SHAPE 12 : LUG FRAME

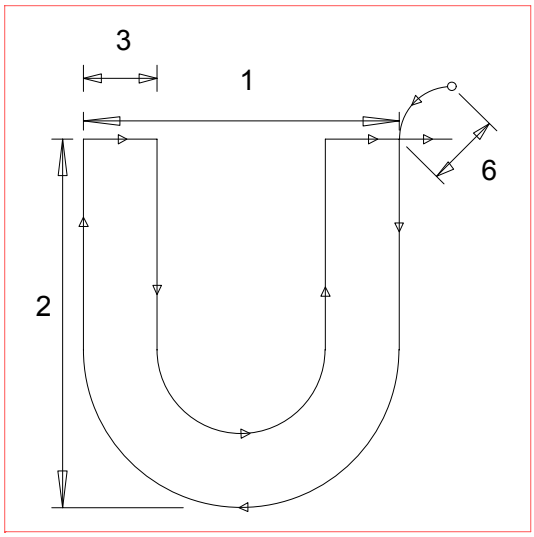

REPEAT PATTERNS

PLATE SIDE

LEFT RIGHT

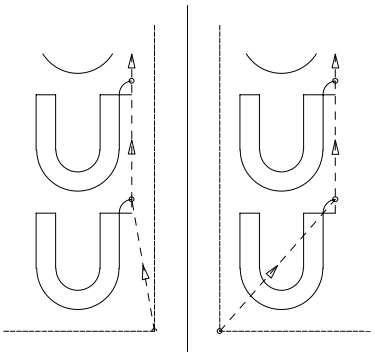

1. WIDTH DIMENSION : (Inches or millimeters)
2. HEIGHT DIMENSION : (Inches or millimeters)
3. THICKNESS DIMENSION : (Inches or millimeters)
4. KERF DIMENSION : (Width of cutting tool path)
5. SCRAP DIMENSION : (Distance between parts, in/mm)
6. LEAD-IN DIMENSION : (Inches or millimeters)
7. VERIFY- YES/NO : (YES or NO)

NOTES:

- The only difference between parts created with LEFT PLATE or RIGHT PLATE enabled occurs in the traverse move to the first pierce point.

SHAPE 13 : SLANT LUG

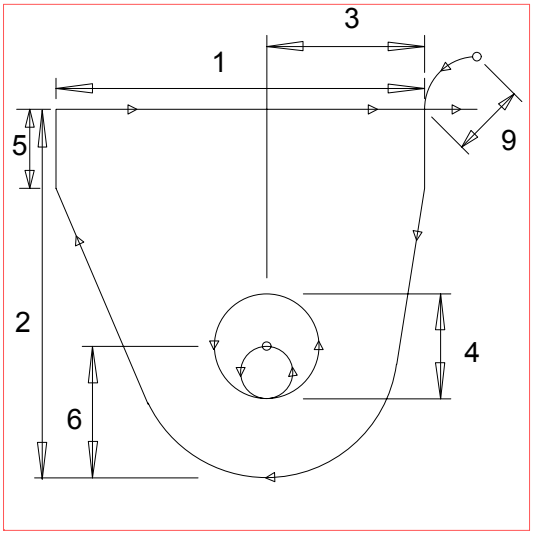

REPEAT PATTERNS

PLATE SIDE

LEFT RIGHT

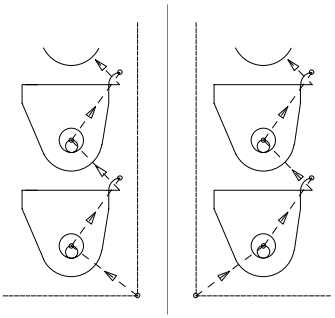

1.	WIDTH DIMENSION	:	(Inches or millimeters)
2.	HEIGHT DIMENSION	:	(Inches or millimeters)
3.	BOLT HOLE CENTER	:	(Inches or millimeters)
4.	HOLE DIAMETER	:	(Inches or millimeters)
5.	SHOULDER HEIGHT	:	(Inches or millimeters)
6.	RADIUS DIMENSION	:	(Inches or millimeters)
7.	KERF DIMENSION	:	(Width of cutting tool path)
8.	SCRAP DIMENSION	:	(Distance between parts, in/mm)
9.	LEAD-IN DIMENSION	:	(Inches or millimeters)
10.	VERIFY- YES/NO	:	(YES or NO)

NOTES:

- If a HOLE DIAMETER of 0 is defined, no center hole is cut.

SHAPE 14 : LIFT LUG

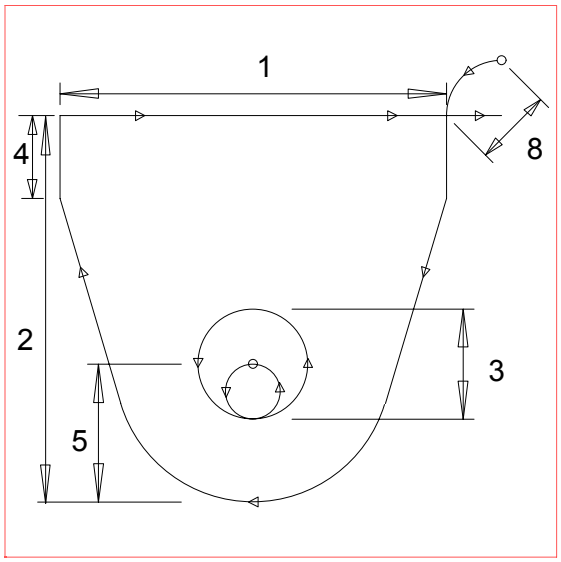

REPEAT PATTERNS

PLATE SIDE

LEFT RIGHT

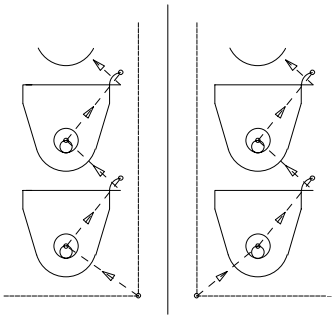

1. WIDTH DIMENSION : (Inches or millimeters)
2. HEIGHT DIMENSION : (Inches or millimeters)
3. HOLE DIAMETER : (Inches or millimeters)
4. SHOULDER HEIGHT : (Inches or millimeters)
5. RADIUS DIMENSION : (Inches or millimeters)
6. KERF DIMENSION : (Width of cutting tool path)
7. SCRAP DIMENSION : (Distance between parts, in/mm)
8. LEAD-IN DIMENSION : (Inches or millimeters)
9. VERIFY- YES/NO : (YES or NO)

NOTES:

- If a HOLE DIAMETER of 0 is defined, no center hole is cut.

SHAPE 15 : WEDGE PAIR

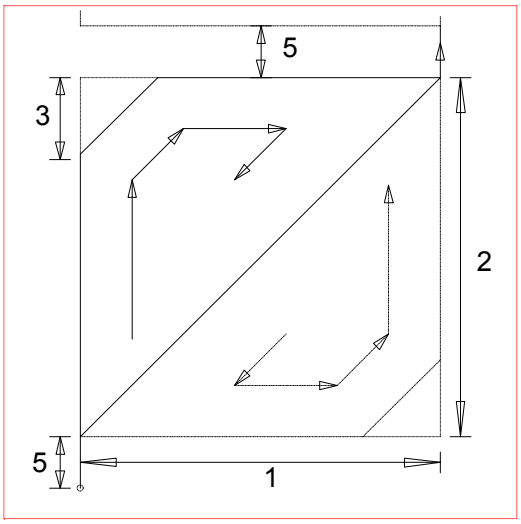

REPEAT PATTERNS

PLATE SIDE

LEFT RIGHT

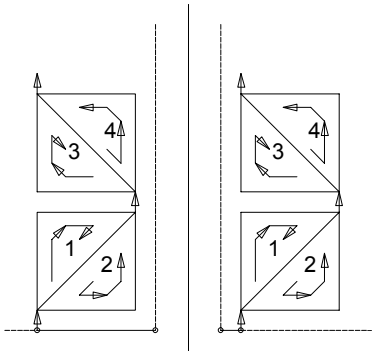

1. WIDTH DIMENSION : (Inches or millimeters)
2. HEIGHT DIMENSION : (Inches or millimeters)
3. BEVEL LENGTH : (Inches or millimeters)
4. KERF DIMENSION : (Width of cutting tool path)
5. SCRAP DIMENSION : (Distance between parts, in/mm)
6. VERIFY- YES/NO : (YES or NO)

NOTES:

- If a BEVEL LENGTH of 0 is defined, no bevel is cut at the corners. Only sharp, 90 degree corners are cut.
- This shape creates a special 4 part repeat sequence to minimize the amount of scrap. However, any number of parts may be cut since each of the 4 is counted as a separate part.

SHAPE 16 : STRAIGHT PIPE SUPPORT

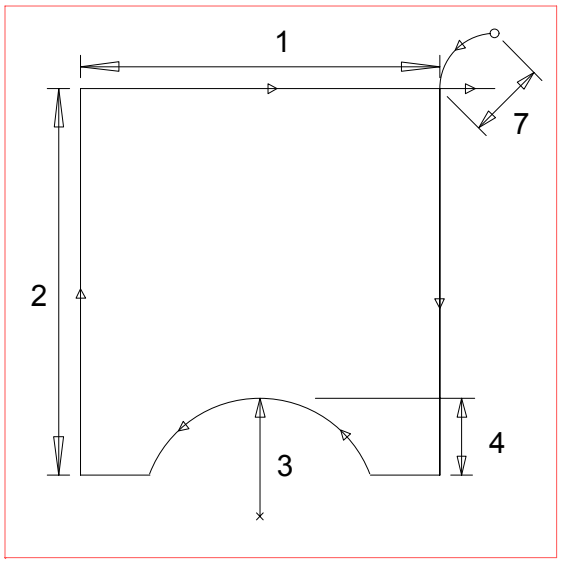

REPEAT PATTERNS

PLATE SIDE

LEFT RIGHT

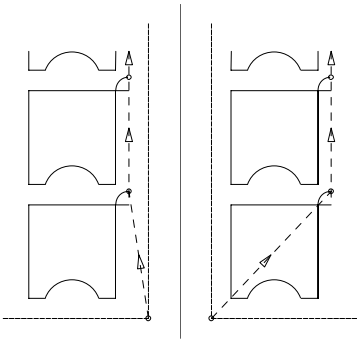

1. WIDTH DIMENSION : (Inches or millimeters)
2. HEIGHT DIMENSION : (Inches or millimeters)
3. RADIUS DIMENSION : (Inches or millimeters)
4. ARC DEPTH : (Inches or millimeters)
5. KERF DIMENSION : (Width of cutting tool path)
6. SCRAP DIMENSION : (Distance between parts, in/mm)
7. LEAD-IN DIMENSION : (Inches or millimeters)
8. VERIFY- YES/NO : (YES or NO)

NOTES:

- The only difference between parts created with LEFT PLATE or RIGHT PLATE enabled occurs in the traverse move to the first pierce point.

SHAPE 17 : SLANT PIPE SUPPORT

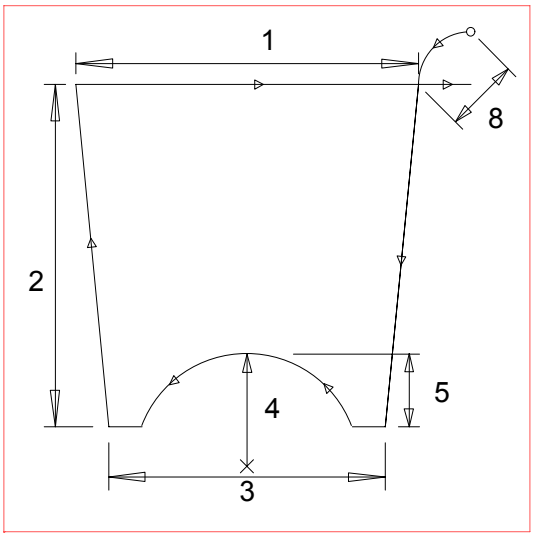

REPEAT PATTERNS

PLATE SIDE

LEFT RIGHT

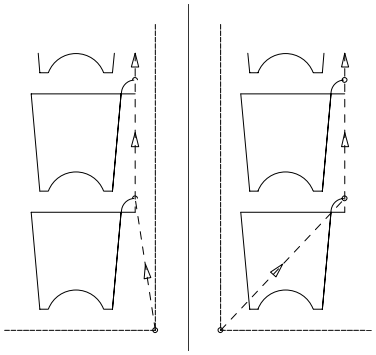

1. BASE WIDTH : (Inches or millimeters)
2. HEIGHT DIMENSION : (Inches or millimeters)
3. TOP WIDTH : (Inches or millimeters)
4. RADIUS DIMENSION : (Inches or millimeters)
5. ARC DEPTH : (Inches or millimeters)
6. KERF DIMENSION : (Width of cutting tool path)
7. SCRAP DIMENSION : (Distance between parts, in/mm)
8. LEAD-IN DIMENSION : (Inches or millimeters)
9. VERIFY- YES/NO : (YES or NO)

NOTES:

- Like others, this part is cut with the BASE at the upper position. As a result, the prompts used to label the top and sides assume the part is rotated 180 degrees.
- The only difference between parts created with LEFT PLATE or RIGHT PLATE enabled occurs in the traverse move to the first pierce point.

SHAPE 18 : VERTICAL PROJECTION

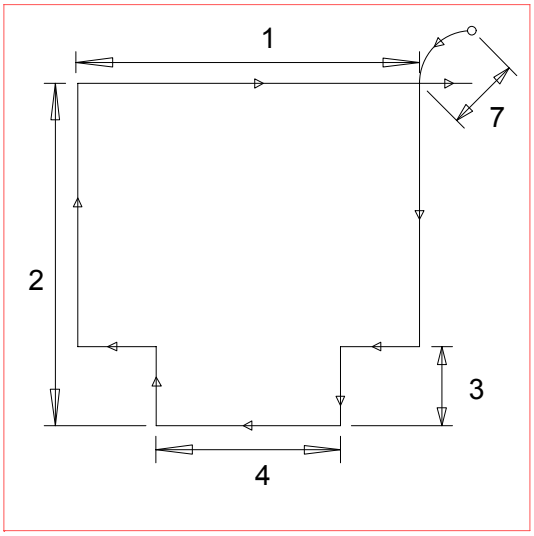

REPEAT PATTERNS

PLATE SIDE

LEFT RIGHT

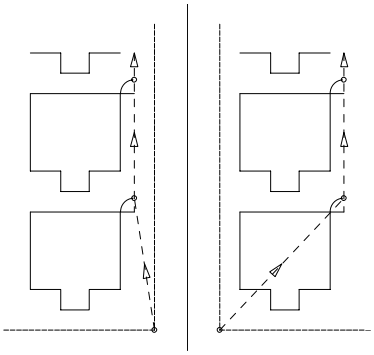

1. WIDTH DIMENSION : (Inches or millimeters)
2. HEIGHT DIMENSION : (Inches or millimeters)
3. COLLAR HEIGHT : (Inches or millimeters)
4. COLLAR WIDTH : (Inches or millimeters)
5. KERF DIMENSION : (Width of cutting tool path)
6. SCRAP DIMENSION : (Distance between parts, in/mm)
7. LEAD-IN DIMENSION : (Inches or millimeters)
8. VERIFY- YES/NO : (YES or NO)

NOTES:

- The only difference between parts created with LEFT PLATE or RIGHT PLATE enabled occurs in the traverse move to the first pierce point.

SHAPE 19 : SLANT PROJECTION

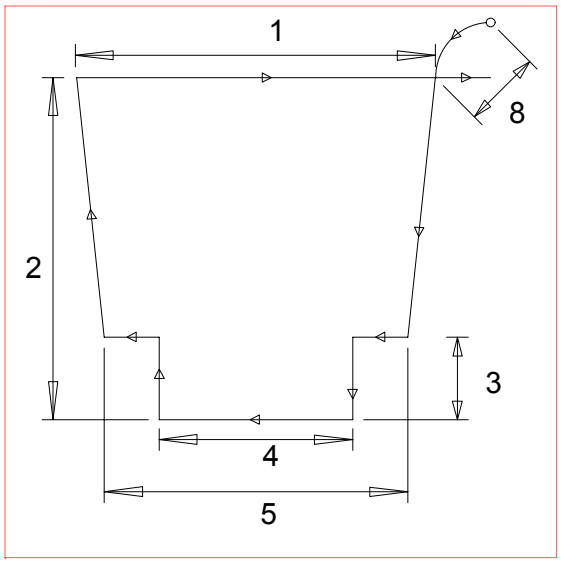

REPEAT PATTERNS

PLATE SIDE

LEFT RIGHT

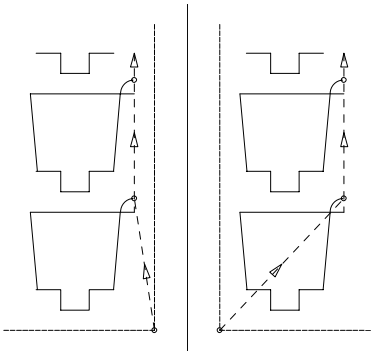

1. BASE WIDTH : (Inches or millimeters)
2. HEIGHT DIMENSION : (Inches or millimeters)
3. COLLAR HEIGHT : (Inches or millimeters)
4. COLLAR WIDTH : (Inches or millimeters)
5. TOP WIDTH : (Inches or millimeters)
6. KERF DIMENSION : (Width of cutting tool path)
7. SCRAP DIMENSION : (Distance between parts, in/mm)
8. LEAD-IN DIMENSION : (Inches or millimeters)
9. VERIFY- YES/NO : (YES or NO)

NOTES:

- Like others, this part is cut with the BASE at the upper position. As a result, the prompts used to label the top and sides assume the part is rotated 180 degrees.
- The only difference between parts created with LEFT PLATE or RIGHT PLATE enabled occurs in the traverse move to the first pierce point.

SHAPE 20 : VERTICAL SLOT

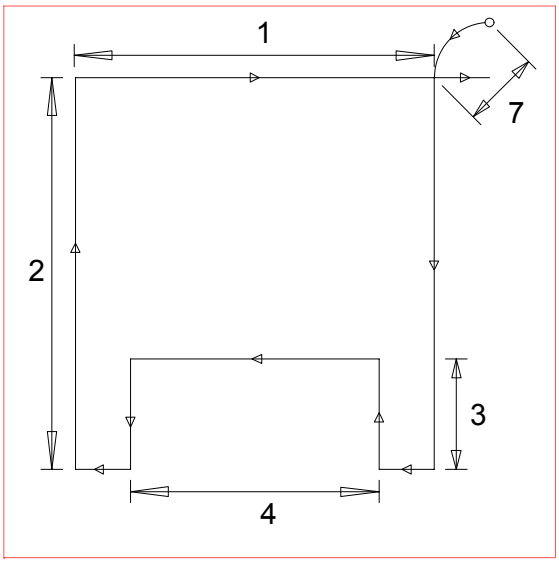

REPEAT PATTERNS

PLATE SIDE

LEFT RIGHT

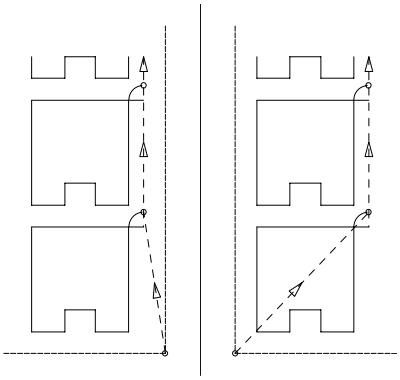

1. WIDTH DIMENSION : (Inches or millimeters)
2. HEIGHT DIMENSION : (Inches or millimeters)
3. COLLAR HEIGHT : (Inches or millimeters)
4. COLLAR WIDTH : (Inches or millimeters)
5. KERF DIMENSION : (Width of cutting tool path)
6. SCRAP DIMENSION : (Distance between parts, in/mm)
7. LEAD-IN DIMENSION : (Inches or millimeters)
8. VERIFY- YES/NO : (YES or NO)

NOTES:

- The only difference between parts created with LEFT PLATE or RIGHT PLATE enabled occurs in the traverse move to the first pierce point.

SHAPE 21 : SLANT SLOT

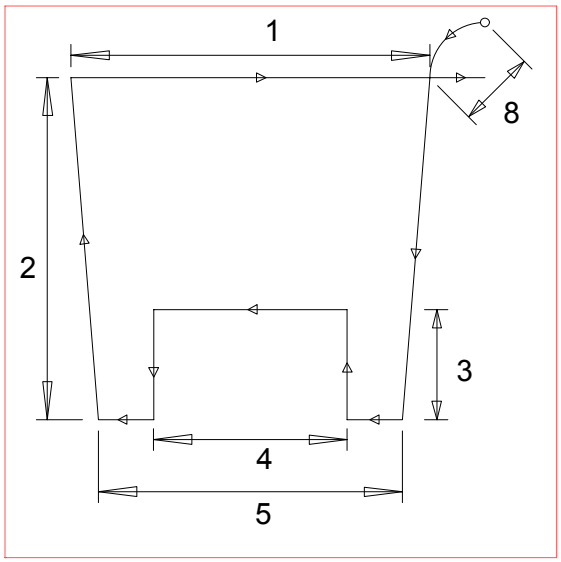

REPEAT PATTERNS

PLATE SIDE

LEFT RIGHT

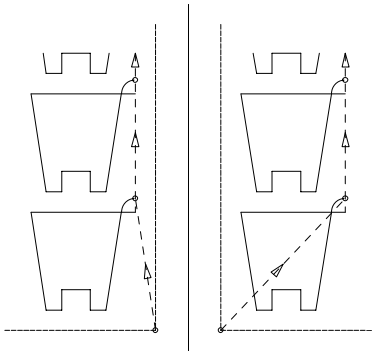

1. BASE WIDTH : (Inches or millimeters)
2. HEIGHT DIMENSION : (Inches or millimeters)
3. COLLAR HEIGHT : (Inches or millimeters)
4. COLLAR WIDTH : (Inches or millimeters)
5. TOP WIDTH : (Inches or millimeters)
6. KERF DIMENSION : (Width of cutting tool path)
7. SCRAP DIMENSION : (Distance between parts, in/mm)
8. LEAD-IN DIMENSION : (Inches or millimeters)
9. VERIFY- YES/NO : (YES or NO)

NOTES:

- Like others, this part is cut with the BASE at the upper position. As a result, the prompts used to label the top and sides assume the part is rotated 180 degrees.
- The only difference between parts created with LEFT PLATE or RIGHT PLATE enabled occurs in the traverse move to the first pierce point.

SHAPE 22 : OCTAGON

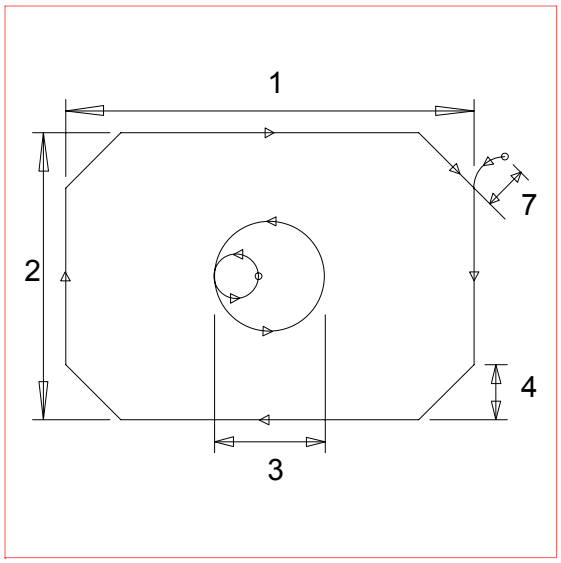

REPEAT PATTERNS

PLATE SIDE

LEFT RIGHT

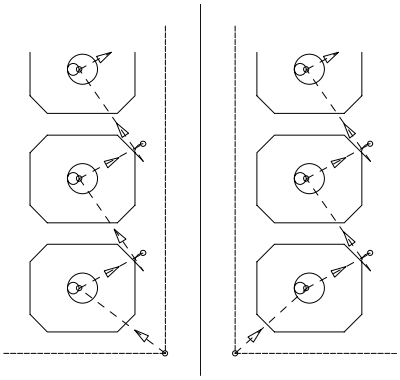

1. WIDTH DIMENSION : (Inches or millimeters)
2. HEIGHT DIMENSION : (Inches or millimeters)
3. HOLE DIAMETER : (Inches or millimeters)
4. BEVEL LENGTH : (Inches or millimeters)
5. KERF DIMENSION : (Width of cutting tool path)
6. SCRAP DIMENSION : (Distance between parts, in/mm)
7. LEAD-IN DIMENSION : (Inches or millimeters)
8. VERIFY- YES/NO : (YES or NO)

NOTES:

- If a HOLE DIAMETER of 0 is defined, no center hole is cut.

SHAPE 23 : SQUARE, CORNER RADIUS IN

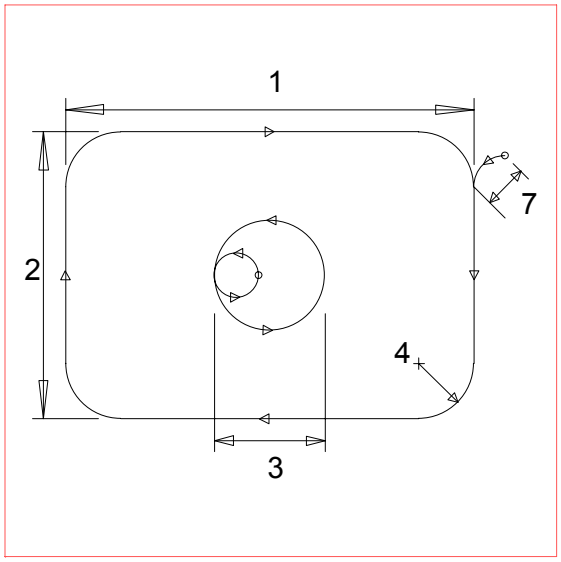

REPEAT PATTERNS

PLATE SIDE

LEFT RIGHT

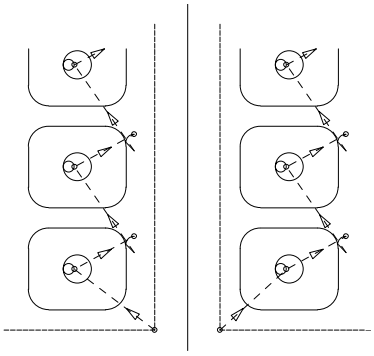

1. WIDTH DIMENSION : (Inches or millimeters)
2. HEIGHT DIMENSION : (Inches or millimeters)
3. HOLE DIAMETER : (Inches or millimeters)
4. ARC RADIUS : (Inches or millimeters)
5. KERF DIMENSION : (Width of cutting tool path)
6. SCRAP DIMENSION : (Distance between parts, in/mm)
7. LEAD-IN DIMENSION : (Inches or millimeters)
8. VERIFY- YES/NO : (YES or NO)

NOTES:

- If a HOLE DIAMETER of 0 is defined, no center hole is cut.

SHAPE 24 : SQUARE, CORNER RADIUS OUT

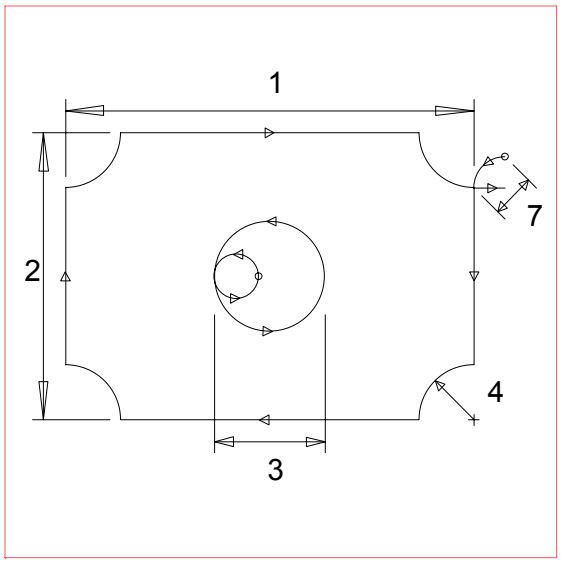

REPEAT PATTERNS

PLATE SIDE

LEFT RIGHT

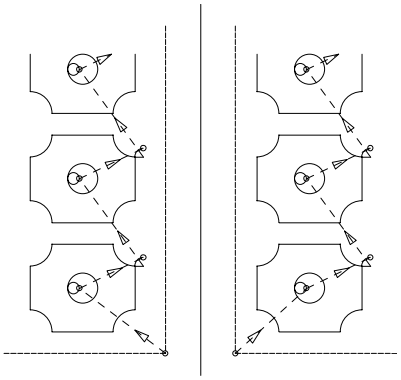

1. WIDTH DIMENSION : (Inches or millimeters)
2. HEIGHT DIMENSION : (Inches or millimeters)
3. HOLE DIAMETER : (Inches or millimeters)
4. ARC RADIUS : (Inches or millimeters)
5. KERF DIMENSION : (Width of cutting tool path)
6. SCRAP DIMENSION : (Distance between parts, in/mm)
7. LEAD-IN DIMENSION : (Inches or millimeters)
8. VERIFY- YES/NO : (YES or NO)

NOTES:

- If a HOLE DIAMETER of 0 is defined, no center hole is cut.

SHAPE 25 : SQUARE WITH HOLE

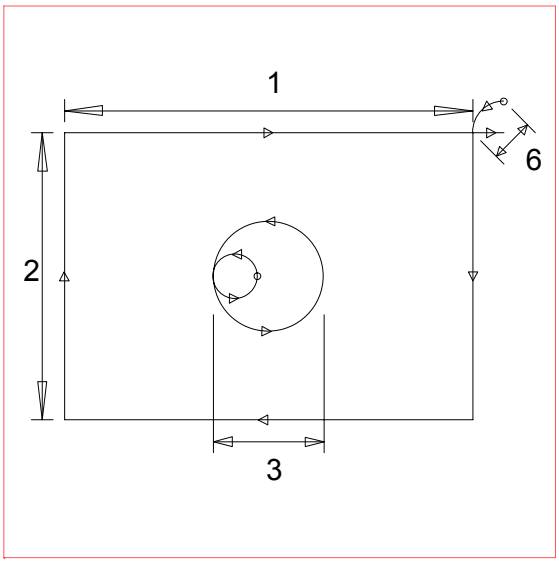

REPEAT PATTERNS

PLATE SIDE

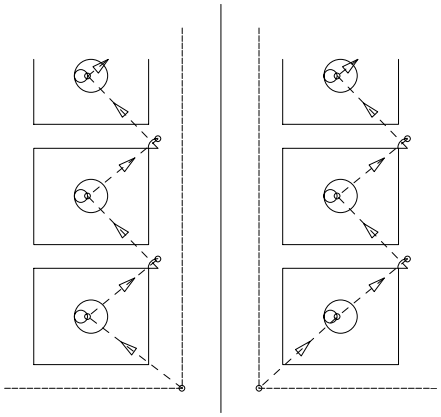

1.	WIDTH DIMENSION	:	(Inches or millimeters)
2.	HEIGHT DIMENSION	:	(Inches or millimeters)
3.	HOLE DIAMETER	:	(Inches or millimeters)
4.	KERF DIMENSION	:	(Width of cutting tool path)
5.	SCRAP DIMENSION	:	(Distance between parts, in/mm)
6.	LEAD-IN DIMENSION	:	(Inches or millimeters)
7.	VERIFY- YES/NO	:	(YES or NO)

NOTES:

- If a HOLE DIAMETER of 0 is defined, no center hole is cut.

SHAPE 26 : OCTAGONAL FRAME

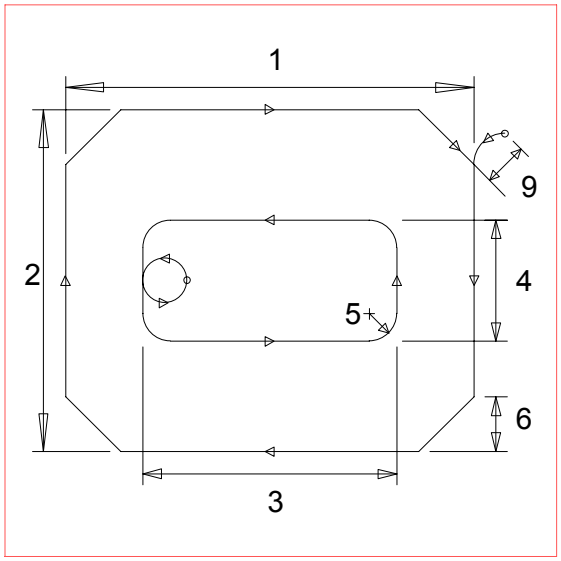

REPEAT PATTERNS

PLATE SIDE

LEFT RIGHT

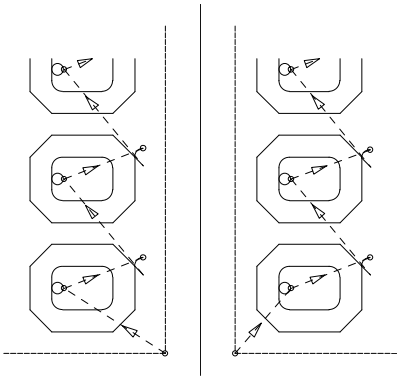

1.	OUTSIDE WIDTH	:	(Inches or millimeters)
2.	OUTSIDE HEIGHT	:	(Inches or millimeters)
3.	INSIDE WIDTH	:	(Inches or millimeters)
4.	INSIDE HEIGHT	:	(Inches or millimeters)
5.	INSIDE RADIUS	:	(Inches or millimeters)
6.	BEVEL LENGTH	:	(Inches or millimeters)
7.	KERF DIMENSION	:	(Width of cutting tool path)
8.	SCRAP DIMENSION	:	(Distance between parts, in/mm)
9.	LEAD-IN DIMENSION	:	(Inches or millimeters)
10.	VERIFY- YES/NO	:	(YES or NO)

NOTES:

- The only difference between parts created with LEFT PLATE or RIGHT PLATE enabled occurs in the traverse move to the first pierce point.

SHAPE 27 : FRAME, CORNER RADIUS IN

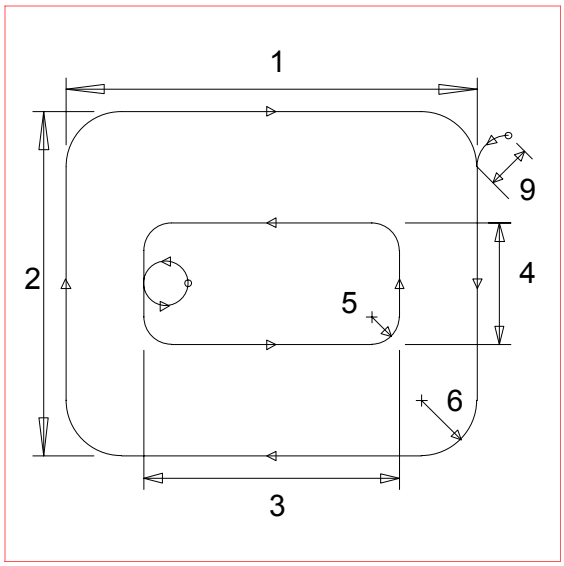

REPEAT PATTERNS

PLATE SIDE

LEFT RIGHT

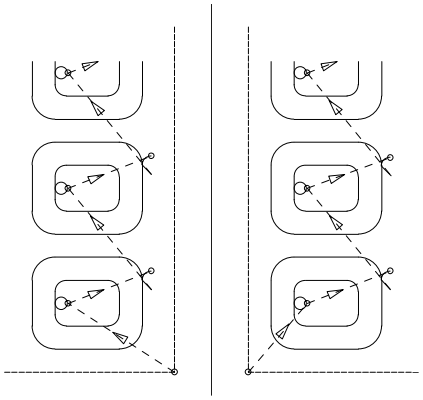

1.	OUTSIDE WIDTH	:	(Inches or millimeters)
2.	OUTSIDE HEIGHT	:	(Inches or millimeters)
3.	INSIDE WIDTH	:	(Inches or millimeters)
4.	INSIDE HEIGHT	:	(Inches or millimeters)
5.	INSIDE RADIUS	:	(Inches or millimeters)
6.	ARC RADIUS	:	(Inches or millimeters)
7.	KERF DIMENSION	:	(Width of cutting tool path)
8.	SCRAP DIMENSION	:	(Distance between parts, in/mm)
9.	LEAD-IN DIMENSION	:	(Inches or millimeters)
10.	VERIFY- YES/NO	:	(YES or NO)

NOTES:

- The only difference between parts created with LEFT PLATE or RIGHT PLATE enabled occurs in the traverse move to the first pierce point, as shown.

SHAPE 28 : FRAME, CORNER RADIUS OUT

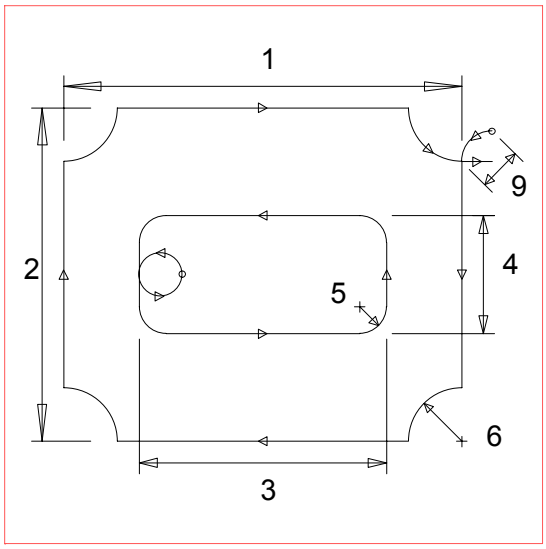

REPEAT PATTERNS

PLATE SIDE

LEFT RIGHT

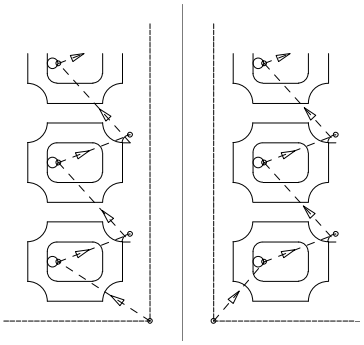

1. OUTSIDE WIDTH : (Inches or millimeters)
2. OUTSIDE HEIGHT : (Inches or millimeters)
3. INSIDE WIDTH : (Inches or millimeters)
4. INSIDE HEIGHT : (Inches or millimeters)
5. INSIDE RADIUS : (Inches or millimeters)
6. ARC RADIUS : (Inches or millimeters)
7. KERF DIMENSION : (Width of cutting tool path)
8. SCRAP DIMENSION : (Distance between parts, in/mm)
9. LEAD-IN DIMENSION : (Inches or millimeters)
10. VERIFY- YES/NO : (YES or NO)

NOTES:

- The only difference between parts created with LEFT PLATE or RIGHT PLATE enabled occurs in the traverse move to the first pierce point, as shown.

SHAPE 29 : SQUARE FRAME

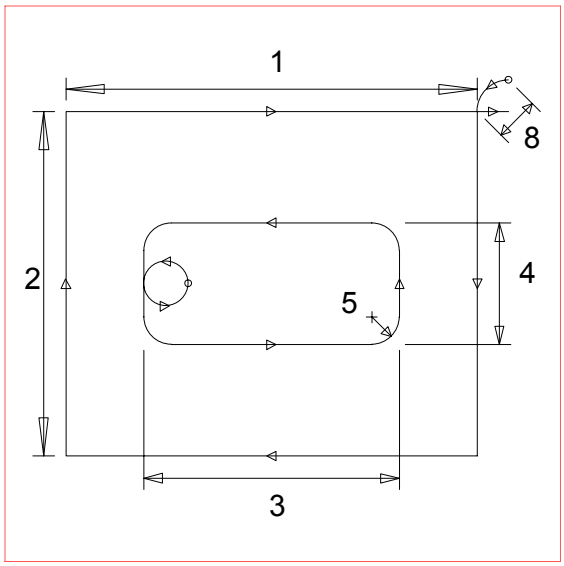

REPEAT PATTERNS

PLATE SIDE

LEFT RIGHT

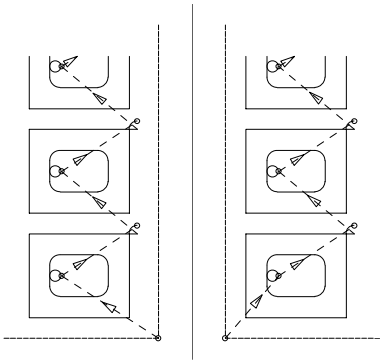

1. OUTSIDE WIDTH : (Inches or millimeters)
2. OUTSIDE HEIGHT : (Inches or millimeters)
3. INSIDE WIDTH : (Inches or millimeters)
4. INSIDE HEIGHT : (Inches or millimeters)
5. INSIDE RADIUS : (Inches or millimeters)
6. KERF DIMENSION : (Width of cutting tool path)
7. SCRAP DIMENSION : (Distance between parts, in/mm)
8. LEAD-IN DIMENSION : (Inches or millimeters)
9. VERIFY- YES/NO : (YES or NO)

NOTES:

- The only difference between parts created with LEFT PLATE or RIGHT PLATE enabled occurs in the traverse move to the first pierce point, as shown.

SHAPE 30 : RECTANGULAR FRAME

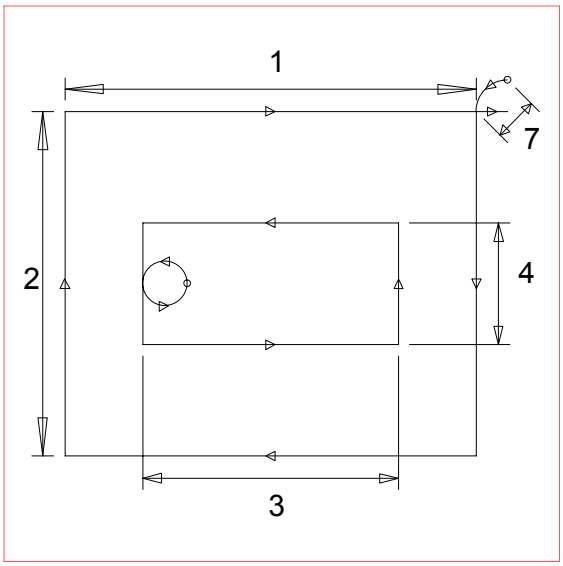

REPEAT PATTERNS

PLATE SIDE

LEFT RIGHT

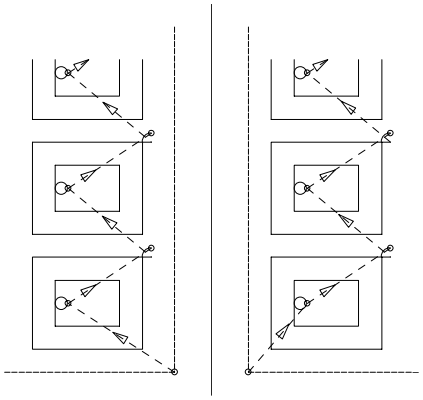

1. OUTSIDE WIDTH : (Inches or millimeters)
2. OUTSIDE HEIGHT : (Inches or millimeters)
3. INSIDE WIDTH : (Inches or millimeters)
4. INSIDE HEIGHT : (Inches or millimeters)
5. KERF DIMENSION : (Width of cutting tool path)
6. SCRAP DIMENSION : (Distance between parts, in/mm)
7. LEAD-IN DIMENSION : (Inches or millimeters)
8. VERIFY- YES/NO : (YES or NO)

NOTES:

- The only difference between parts created with LEFT PLATE or RIGHT PLATE enabled occurs in the traverse move to the first pierce point, as shown.

SHAPE 31 : UNIVERSAL FRAME

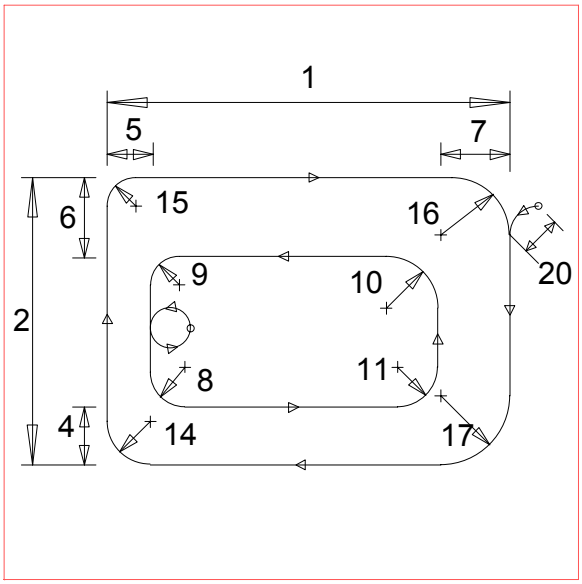

REPEAT PATTERNS

PLATE SIDE

LEFT RIGHT

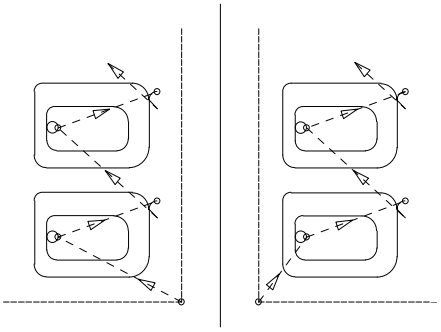

EXAMPLE SHAPES

1.	WIDTH DIMENSION	:	(Inches or millimeters)
2.	HEIGHT DIMENSION	:	(Inches or millimeters)
3.	SYMMETRY	:	(YES or NO)
4.	BOTTOM THICKNESS	:	(Inches or millimeters)
5.	LEFT THICKNESS	:	(Inches or millimeters)
6.	TOP THICKNESS	:	(Inches or millimeters)
7.	RIGHT THICKNESS	:	(Inches or millimeters)
8.	B-LEFT INNER RADIUS	:	(Inches or millimeters)
9.	T-LEFT INNER RADIUS	:	(Inches or millimeters)
10.	T-RIGHT INNER RADIUS	:	(Inches or millimeters)
11.	B-RIGHT INNER RADIUS	:	(Inches or millimeters)
12.	BEVEL CORNERS	:	(YES or NO)
13.	CONVEX	:	(YES or NO)
14.	B-LEFT OUTER RADIUS	:	(Inches or millimeters)
15.	T-LEFT OUTER RADIUS	:	(Inches or millimeters)
16.	T-RIGHT OUTER RADIUS	:	(Inches or millimeters)
17.	B-RIGHT OUTER RADIUS	:	(Inches or millimeters)
18.	KERF DIMENSION	:	(Width of cutting tool path)
19.	SCRAP DIMENSION	:	(Distance between parts, in/mm)
20.	LEAD-IN DIMENSION	:	(Inches or millimeters)
21.	VERIFY- YES/NO	:	(YES or NO)

NOTES:

- When SYMMETRY:YES is selected, values for THICKNESS, INNER RADIUS and OUTER RADIUS are automatically pre-loaded to define a symmetrical part.
- The CONVEX prompt line only appears when BEVEL CORNERS:NO is selected.

SHAPE 32 : RECTANGULAR HOLE

REPEAT PATTERNS

MANUAL REPEAT

ALL DIRECTIONS ALLOWED

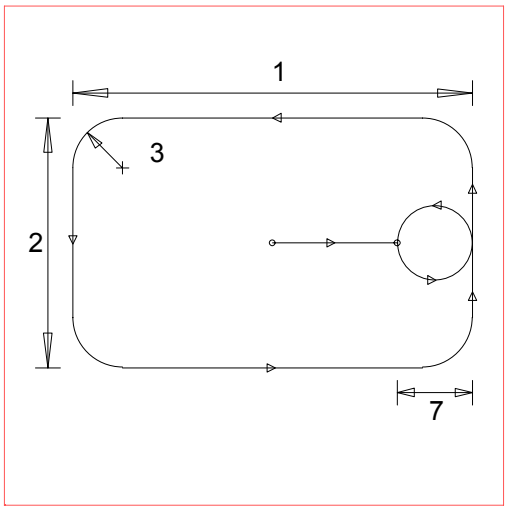

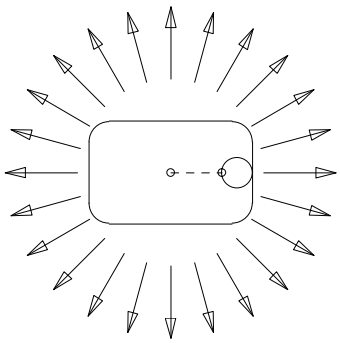

1. WIDTH DIMENSION : (Inches or millimeters)
2. HEIGHT DIMENSION : (Inches or millimeters)
3. CORNER RADIUS : (Inches or millimeters)
4. X MOVE DISTANCE : (Rail distance to next hole)
5. Y MOVE DISTANCE : (Cross distance to next hole)
6. KERF DIMENSION : (Width of cutting tool path)
7. LEAD-IN DIMENSION : (Inches or millimeters)
8. VERIFY- YES/NO : (YES or NO)

NOTES:

- The X and Y MOVE DISTANCE values are used to define the "center to center" distance between holes. From this center position, the program moves the machine to the pierce point determined by the LEAD-IN DIMENSION.
- LEAD-IN DIMENSION must be less than the WIDTH DIMENSION.
- For the first hole, the torch should be positioned to center of the hole by the operator.

SHAPE 33 : VERTICAL HOLE

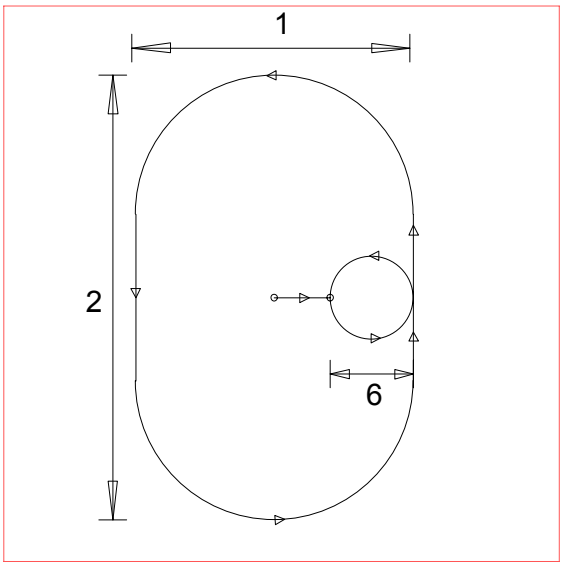

REPEAT PATTERNS

MANUAL REPEAT

ALL DIRECTIONS ALLOWED

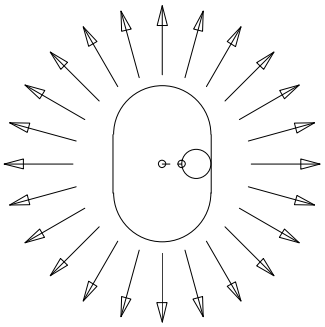

1.	SLOT WIDTH	:	(Inches or millimeters)
2.	SLOT HEIGHT	:	(Inches or millimeters)
3.	X MOVE DISTANCE	:	(Rail distance to next hole)
4.	Y MOVE DISTANCE	:	(Cross distance to next hole)
5.	KERF DIMENSION	:	(Width of cutting tool path)
6.	LEAD-IN DIMENSION	:	(Inches or millimeters)
7.	VERIFY- YES/NO	:	(YES or NO)

NOTES:

- The X and Y MOVE DISTANCE values are used to define the "center to center" distance between holes. From this center position, the program moves the machine to the pierce point determined by the LEAD-IN DIMENSION.
- LEAD-IN DIMENSION must be less than SLOT WIDTH.
- For the first hole, the torch should be positioned to center of the hole by the operator.

SHAPE 34 : HORIZONTAL HOLE

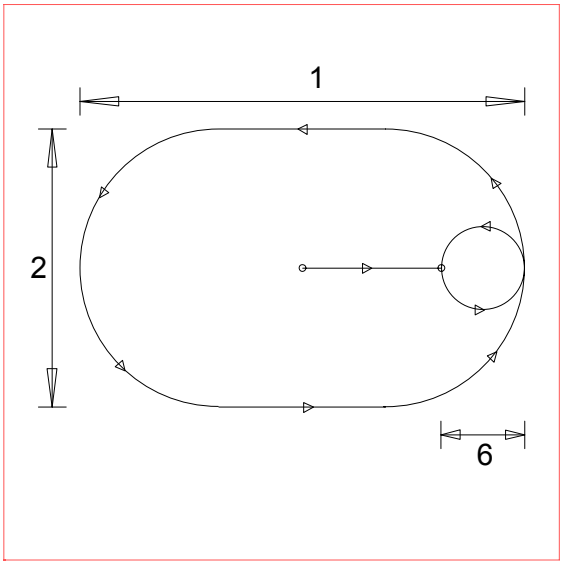

REPEAT PATTERNS

MANUAL REPEAT

ALL DIRECTIONS ALLOWED

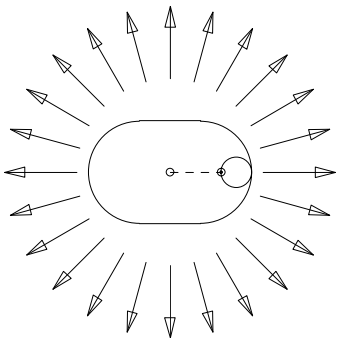

1.	SLOT WIDTH	:	(Inches or millimeters)
2.	SLOT HEIGHT	:	(Inches or millimeters)
3.	X MOVE DISTANCE	:	(Rail distance to next hole)
4.	Y MOVE DISTANCE	:	(Cross distance to next hole)
5.	KERF DIMENSION	:	(Width of cutting tool path)
6.	LEAD-IN DIMENSION	:	(Inches or millimeters)
7.	VERIFY- YES/NO	:	(YES or NO)

NOTES:

- The X and Y MOVE DISTANCE values are used to define the center to center distance between holes. From this center position, the program moves the machine to the pierce point determined by the LEAD-IN DIMENSION.
- LEAD-IN DIMENSION must be less than the SLOT HEIGHT.
- For the first hole, the torch should be positioned to center of the hole by the operator.

SHAPE 35 : CIRCULAR HOLE

REPEAT PATTERNS

MANUAL REPEAT

ALL DIRECTIONS ALLOWED

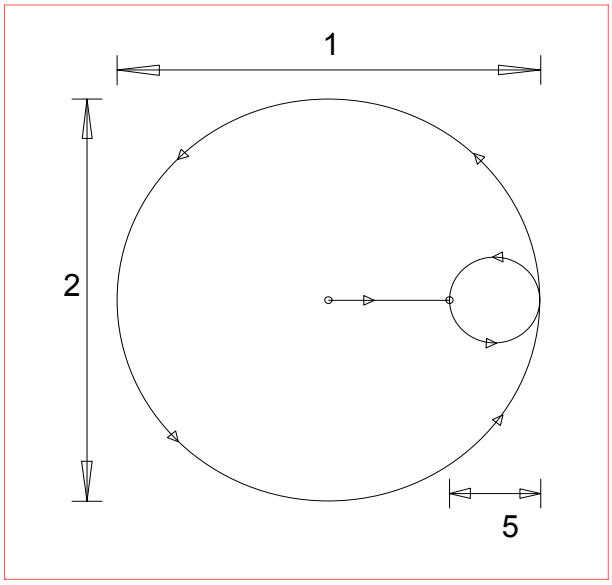

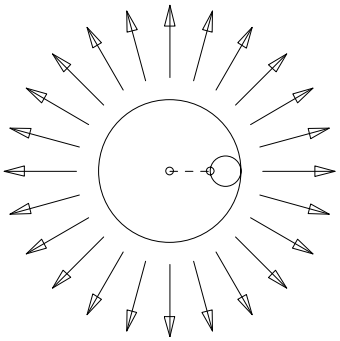

1. DIAMETER DIMENSION : (Inches or millimeters)
2. X MOVE DISTANCE : (Rail distance to next hole)
3. Y MOVE DISTANCE : (Cross distance to next hole)
4. KERF DIMENSION : (Width of cutting tool path)
5. LEAD-IN DIMENSION : (Inches or millimeters)
6. VERIFY- YES/NO : (YES or NO)

NOTES:

- The X and Y MOVE DISTANCE values are used to define the center to center distance between holes. From this center position, the program moves the machine to the pierce point determined by the LEAD-IN DIMENSION.
- LEAD-IN DIMENSION must be less than the DIAMETER DIMENSION.
- For the first hole, the torch should be positioned to center of the hole by the operator.

SHAPE 36 : BEAM SUPPORT

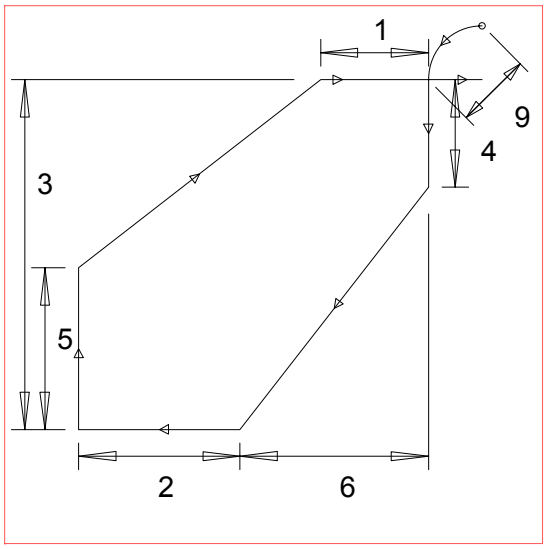

REPEAT PATTERNS

PLATE SIDE

LEFT RIGHT

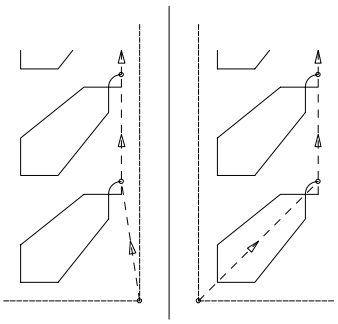

1.	BASE WIDTH	:	(Inches or millimeters)
2.	TOP WIDTH	:	(Inches or millimeters)
3.	HEIGHT DIMENSION	:	(Inches or millimeters)
4.	LEFT SHOULDER	:	(Inches or millimeters)
5.	RIGHT SHOULDER	:	(Inches or millimeters)
6.	LEFT OFFSET	:	(Inches or millimeters)
7.	KERF DIMENSION	:	(Width of cutting tool path)
8.	SCRAP DIMENSION	:	(Distance between parts, in/mm)
9.	LEAD-IN DIMENSION	:	(Inches or millimeters)
10.	VERIFY- YES/NO	:	(YES or NO)

NOTES:

- Like others, this part is cut with the BASE at the upper position. As a result, the prompts used to label the top and sides assume the part is rotated 180 degrees.
- The only difference between parts created with LEFT PLATE or RIGHT PLATE enabled occurs in the traverse move to the first pierce point, as shown.

SHAPE 37 : TRUSS SUPPORT

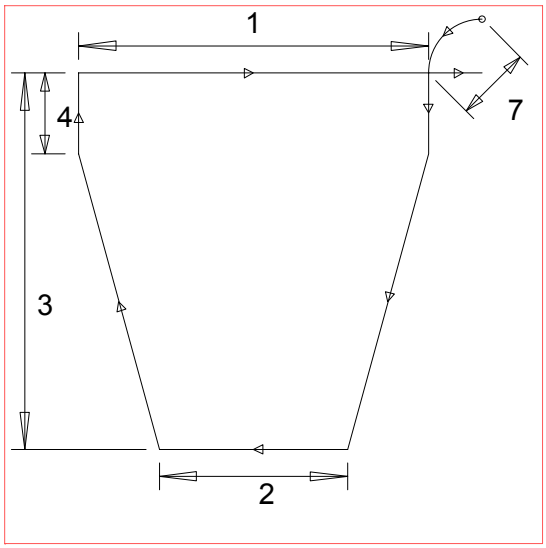

REPEAT PATTERNS

PLATE SIDE

LEFT RIGHT

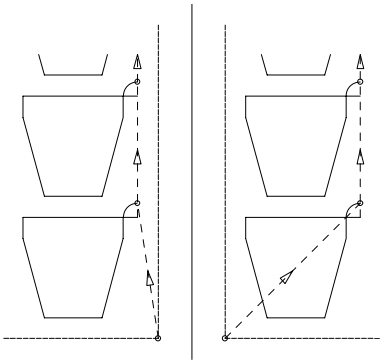

1. BASE WIDTH : (Inches or millimeters)
2. TOP WIDTH : (Inches or millimeters)
3. HEIGHT DIMENSION : (Inches or millimeters)
4. SHOULDER HEIGHT : (Inches or millimeters)
5. KERF DIMENSION : (Width of cutting tool path)
6. SCRAP DIMENSION : (Distance between parts, in/mm)
7. LEAD-IN DIMENSION : (Inches or millimeters)
8. VERIFY- YES/NO : (YES or NO)

NOTES:

- Like others, this part is cut with the BASE at the upper position. As a result, the prompts used to label the top and sides assume the part is rotated 180 degrees.
- The only difference between parts created with LEFT PLATE or RIGHT PLATE enabled occurs in the traverse move to the first pierce point, as shown.

SHAPE 38 : ANGULAR TRUSS

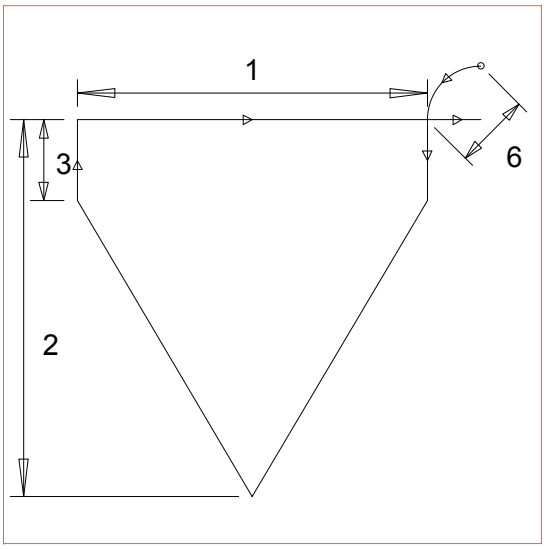

REPEAT PATTERNS

PLATE SIDE

LEFT RIGHT

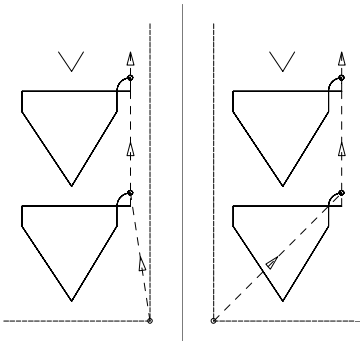

1.	BASE WIDTH	:	(Inches or millimeters)
2.	HEIGHT DIMENSION	:	(Inches or millimeters)
3.	SHOULDER HEIGHT	:	(Inches or millimeters)
4.	KERF DIMENSION	:	(Width of cutting tool path)
5.	SCRAP DIMENSION	:	(Distance between parts, in/mm)
6.	LEAD-IN DIMENSION	:	(Inches or millimeters)
7.	VERIFY- YES/NO	:	(YES or NO)

NOTES:

- Like others, this part is cut with the BASE at the upper position.
- The only difference between parts created with LEFT PLATE or RIGHT PLATE enabled occurs in the traverse move to the first pierce point, as shown.

SHAPE 39 : TRIANGLE

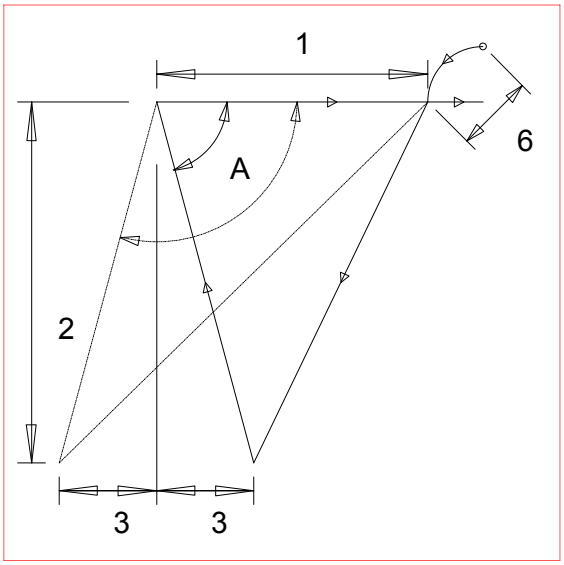

REPEAT PATTERNS

PLATE SIDE

LEFT RIGHT

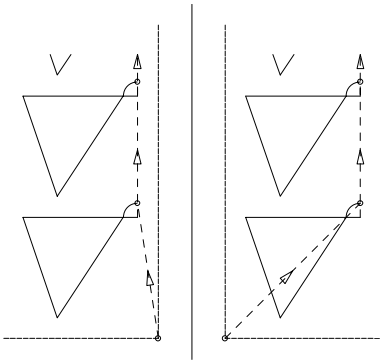

1. BASE WIDTH : (Inches or millimeters)
2. HEIGHT DIMENSION : (Inches or millimeters)
3. LEFT OFFSET : (Inches or millimeters)
4. KERF DIMENSION : (Width of cutting tool path)
5. SCRAP DIMENSION : (Distance between parts, in/mm)
6. LEAD-IN DIMENSION : (Inches or millimeters)
7. VERIFY- YES/NO : (YES or NO)

NOTES:

- Like others, this part is cut with the BASE at the upper position. However the LEFT OFFSET is actually on the left side of the part as shown.
- When LEFT OFFSET is greater than 0, angle "A" is greater than 90 degrees and when it is less than 0, angle "A" is less than 90 degrees.
- The only difference between parts created with LEFT PLATE or RIGHT PLATE enabled occurs in the traverse move to the first pierce point, as shown.

SHAPE 40 : BEVELED RECTANGLE

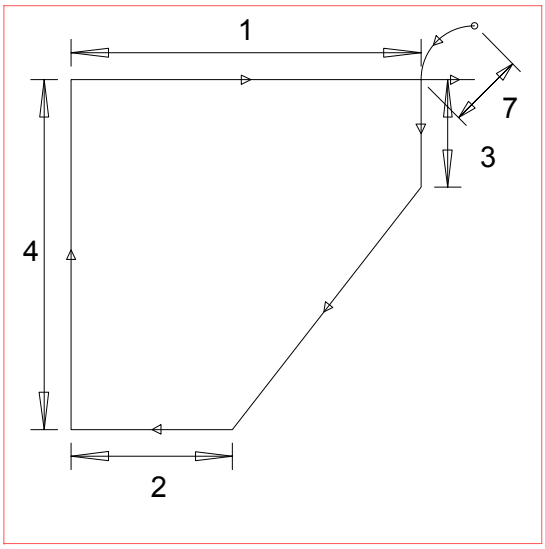

REPEAT PATTERNS

PLATE SIDE

LEFT RIGHT

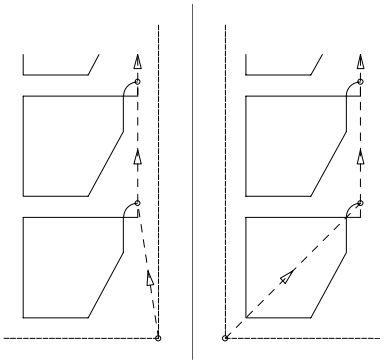

1. BASE WIDTH : (Inches or millimeters)
2. TOP WIDTH : (Inches or millimeters)
3. LEFT HEIGHT : (Inches or millimeters)
4. RIGHT HEIGHT : (Inches or millimeters)
5. KERF DIMENSION : (Width of cutting tool path)
6. SCRAP DIMENSION : (Distance between parts, in/mm)
7. LEAD-IN DIMENSION : (Inches or millimeters)
8. VERIFY- YES/NO : (YES or NO)

NOTES:

- Like others, this part is cut with the BASE at the upper position. As a result, the prompts used to label the top and sides assume the part is rotated 180 degrees.
- The only difference between parts created with LEFT PLATE or RIGHT PLATE enabled occurs in the traverse move to the first pierce point, as shown.

SHAPE 41 : TRAPEZOID

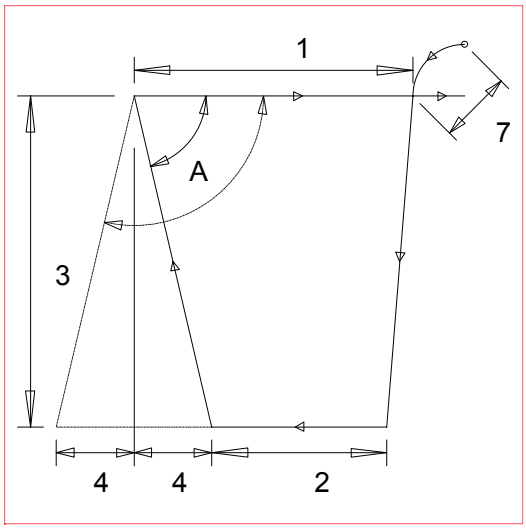

REPEAT PATTERNS

PLATE SIDE

LEFT RIGHT

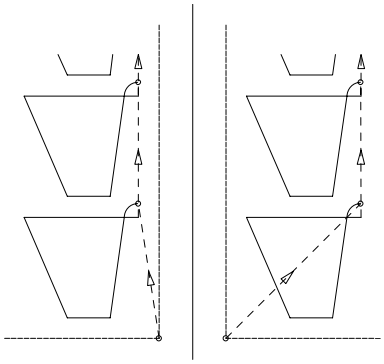

1.	BASE WIDTH	:	(Inches or millimeters)
2.	TOP WIDTH	:	(Inches or millimeters)
3.	HEIGHT DIMENSION	:	(Inches or millimeters)
4.	LEFT OFFSET	:	(Inches or millimeters)
5.	KERF DIMENSION	:	(Width of cutting tool path)
6.	SCRAP DIMENSION	:	(Distance between parts, in/mm)
7.	LEAD-IN DIMENSION	:	(Inches or millimeters)
8.	VERIFY- YES/NO	:	(YES or NO)

NOTES:

- Like others, this part is cut with the BASE at the upper position and the TOP at the lower position. However the LEFT OFFSET is actually on the left side of the part as shown.
- When LEFT OFFSET is greater than 0, angle "A" is greater than 90 degrees and when it is less than 0, angle "A" is less than 90 degrees.
- The only difference between parts created with LEFT PLATE or RIGHT PLATE enabled occurs in the traverse move to the first pierce point, as shown.

SHAPE 42 : QUAD SIDE

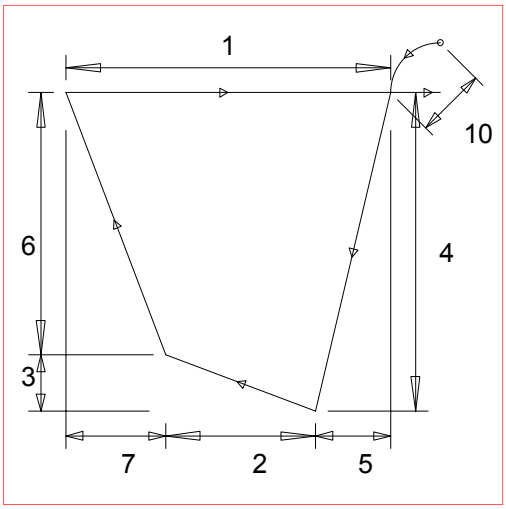

REPEAT PATTERNS

PLATE SIDE

LEFT RIGHT

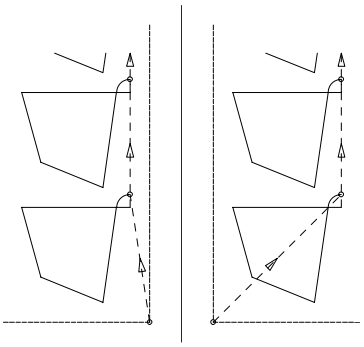

1.	BASE WIDTH	:	(Inches or millimeters)
2.	TOP WIDTH	:	(Inches or millimeters)
3.	TOP OFFSET	:	(Inches or millimeters)
4.	LEFT HEIGHT	:	(Inches or millimeters)
5.	LEFT OFFSET	:	(Inches or millimeters)
6.	RIGHT HEIGHT	:	(Inches or millimeters)
7.	RIGHT OFFSET	:	(Inches or millimeters)
8.	KERF DIMENSION	:	(Width of cutting tool path)
9.	SCRAP DIMENSION	:	(Distance between parts, in/mm)
10.	LEAD-IN DIMENSION	:	(Inches or millimeters)
11.	VERIFY- YES/NO	:	(YES or NO)

NOTES:

- Like others, this part is cut with the BASE at the upper position. As a result, the prompts used to label the top and sides assume the part is rotated 180 degrees.
- The only difference between parts created with LEFT PLATE or RIGHT PLATE enabled occurs in the traverse move to the first pierce point, as shown.

SHAPE 43 : LAP JOINT

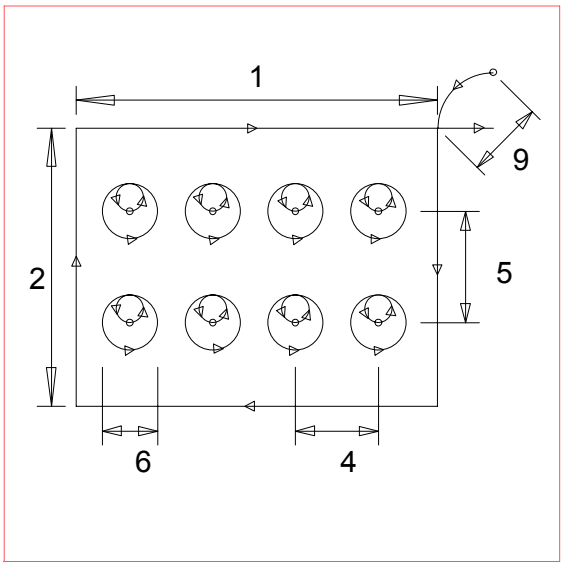

REPEAT PATTERNS

PLATE SIDE

LEFT RIGHT

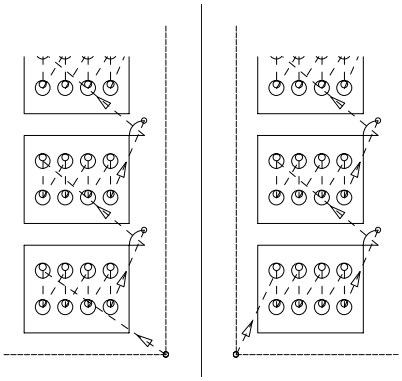

1.	WIDTH DIMENSION	:	(Inches or millimeters)
2.	HEIGHT DIMENSION	:	(Inches or millimeters)
3.	NUMBER OF COLUMNS	:	(Count, 0 to 99)
4.	COLUMN DISTANCE	:	(Inches or millimeters)
5.	BOLT HOLE DISTANCE	:	(Inches or millimeters)
6.	BOLT HOLE DIAMETER	:	(Inches or millimeters)
7.	KERF DIMENSION	:	(Width of cutting tool path)
8.	SCRAP DIMENSION	:	(Distance between parts, in/mm)
9.	LEAD-IN DIMENSION	:	(Inches or millimeters)
10.	VERIFY- YES/NO	:	(YES or NO)

NOTES:

- The hole pattern defined is automatically centered on the part from top to bottom and left to right.
- To create a part with a single row of holes, use shape number 44, SLOTTED PLATE, with a SLOT HEIGHT equal to the SLOT WIDTH.

SHAPE 44 : SLOTTED PLATE

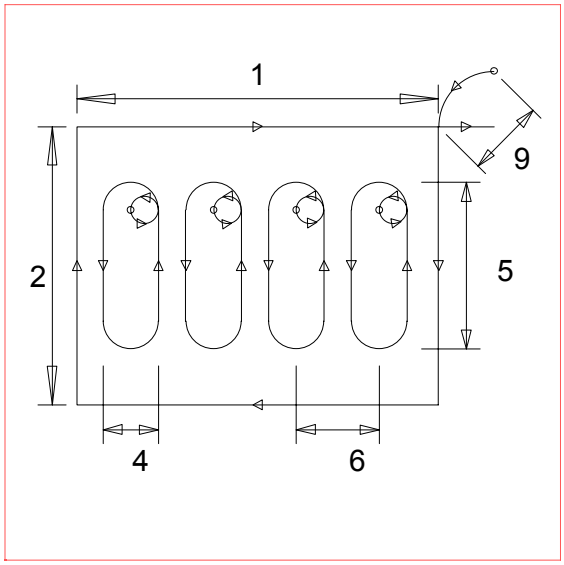

REPEAT PATTERNS

PLATE SIDE

LEFT RIGHT

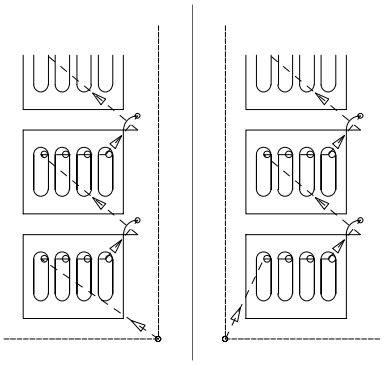

1. WIDTH DIMENSION : (Inches or millimeters)
2. HEIGHT DIMENSION : (Inches or millimeters)
3. NUMBER OF SLOTS : (Count, 0 to 99)[1]
4. SLOT WIDTH : (Inches or millimeters)
5. SLOT HEIGHT : (Inches or millimeters)
6. SLOT DISTANCE : (Inches or millimeters)
7. KERF DIMENSION : (Width of cutting tool path)
8. SCRAP DIMENSION : (Distance between parts, in/mm)
9. LEAD-IN DIMENSION : (Inches or millimeters)
10. VERIFY- YES/NO : (YES or NO)

NOTES:

- The slot pattern defined is automatically centered on the part from top to bottom and left to right.

SHAPE 45 : LAMP BASE

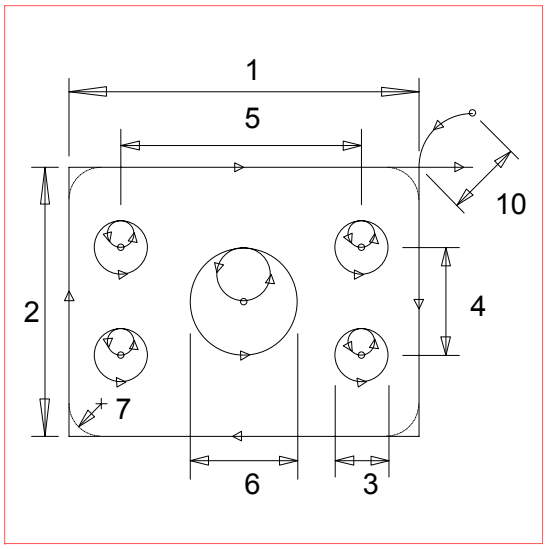

REPEAT PATTERNS

PLATE SIDE

LEFT RIGHT

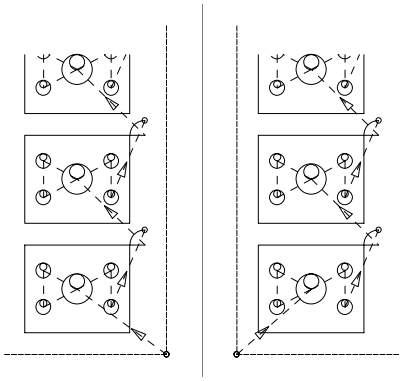

1.	WIDTH DIMENSION	:	(Inches or millimeters)
2.	HEIGHT DIMENSION	:	(Inches or millimeters)
3.	BOLT HOLE DIAMETER	:	(Inches or millimeters)
4.	X BOLT HOLE CENTER	:	(Inches or millimeters)
5.	Y BOLT HOLE CENTER	:	(Inches or millimeters)
6.	CENTER HOLE DIAMETER	:	(Inches or millimeters)
7.	CORNER RADIUS	:	(Inches or millimeters)
8.	KERF DIMENSION	:	(Width of cutting tool path)
9.	SCRAP DIMENSION	:	(Distance between parts, in/mm)
10.	LEAD-IN DIMENSION	:	(Inches or millimeters)
11.	REPEAT PROMPTING	:	(YES or NO)

NOTES:

- The hole pattern defined is automatically centered on the part from top to bottom and left to right.
- If a CENTER HOLE DIAMETER of 0 is defined, no hole is cut.
- If a CORNER RADIUS of 0 is defined, sharp corners are cut.

SHAPE 46 : CAM

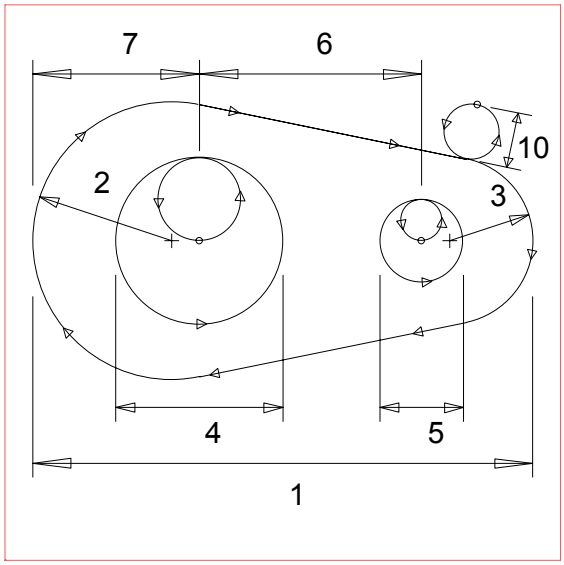

REPEAT PATTERNS

PLATE SIDE

LEFT RIGHT

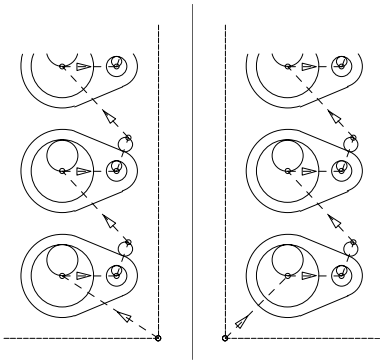

1.	WIDTH DIMENSION	:	(Inches or millimeters)
2.	LEFT RADIUS	:	(Inches or millimeters)
3.	RIGHT RADIUS	:	(Inches or millimeters)
4.	LEFT HOLE DIAMETER	:	(Inches or millimeters)
5.	RIGHT HOLE DIAMETER	:	(Inches or millimeters)
6.	CENTER DISTANCE	:	(Inches or millimeters)
7.	LEFT OFFSET	:	(Inches or millimeters)
8.	KERF DIMENSION	:	(Width of cutting tool path)
9.	SCRAP DIMENSION	:	(Distance between parts, in/mm)
10.	LEAD-IN DIMENSION	:	(Inches or millimeters)
11.	VERIFY- YES/NO	:	(YES or NO)

NOTES:

- If a LEFT HOLE DIAMETER of 0 is defined, no holes are cut in the part.
- If a RIGHT HOLE DIAMETER of 0 is defined, only the LEFT HOLE is cut.

SHAPE 47 : "L" BRACKET 1

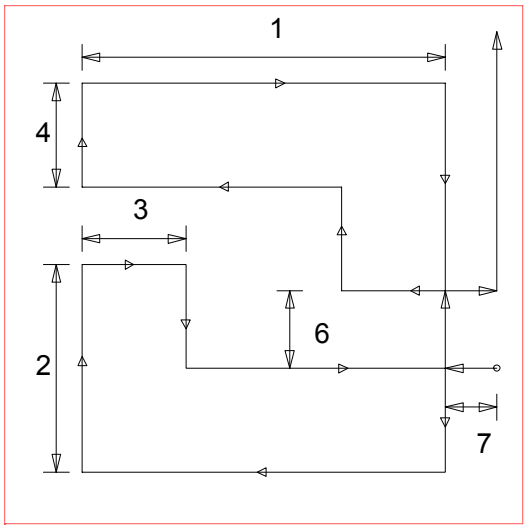

REPEAT PATTERNS

PLATE SIDE

LEFT RIGHT

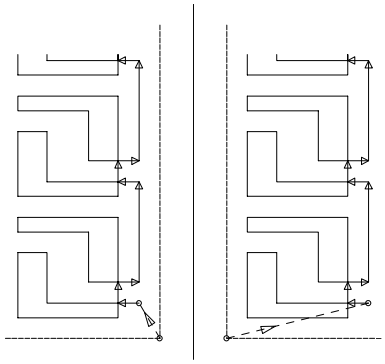

1. WIDTH DIMENSION : (Inches or millimeters)
2. HEIGHT DIMENSION : (Inches or millimeters)
3. VERTICAL THICKNESS : (Inches or millimeters)
4. HORIZONTAL THICKNESS : (Inches or millimeters)
5. KERF DIMENSION : (Width of cutting tool path)
6. SCRAP DIMENSION : (Distance between parts, in/mm)
7. LEAD-IN DIMENSION : (Inches or millimeters)
8. VERIFY- YES/NO : (YES or NO)

NOTES:

- All chain cut parts start from the plate corner closest to the operator. The PLATE SIDE is defined through SYSTEM SETUP DATA.
- Although parts are created in pairs to minimize scrap, each part is individually counted when cut.
- If part dimensions make it impossible to create part pairs without overlap, use shape 48, "L" BRACKET 2.

SHAPE 48 : "L" BRACKET 2

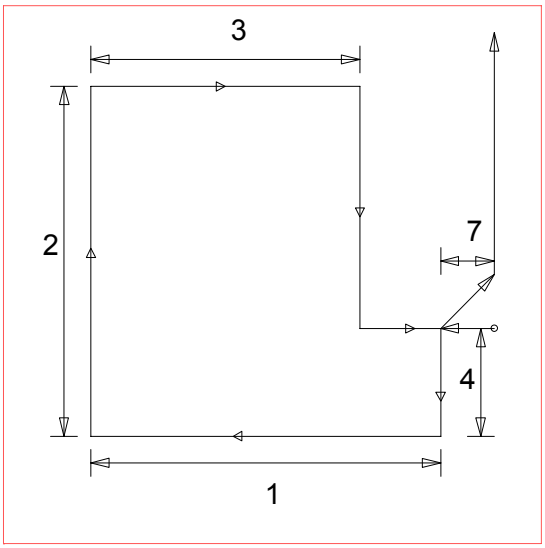

REPEAT PATTERNS

PLATE SIDE

LEFT RIGHT

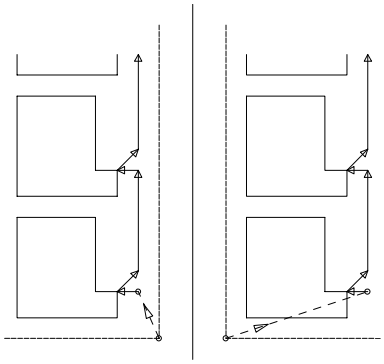

1. WIDTH DIMENSION : (Inches or millimeters)
2. HEIGHT DIMENSION : (Inches or millimeters)
3. VERTICAL THICKNESS : (Inches or millimeters)
4. HORIZONTAL THICKNESS : (Inches or millimeters)
5. KERF DIMENSION : (Width of cutting tool path)
6. SCRAP DIMENSION : (Distance between parts, in/mm)
7. LEAD-IN DIMENSION : (Inches or millimeters)
8. VERIFY- YES/NO : (YES or NO)

NOTES:

- All chain cut parts start from the plate corner closest to the operator. The PLATE SIDE is defined through SYSTEM SETUP DATA.
- If excessive scrap can be eliminated by creating "part pairs", use shape 47, "L" BRACKET 1.

SHAPE 49 : BI DAMPER

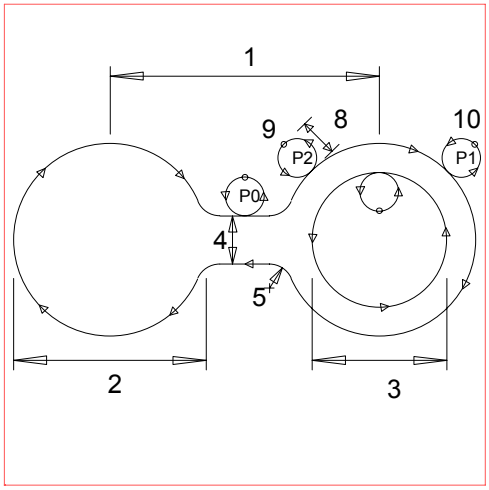

REPEAT PATTERNS

PLATE SIDE

LEFT RIGHT

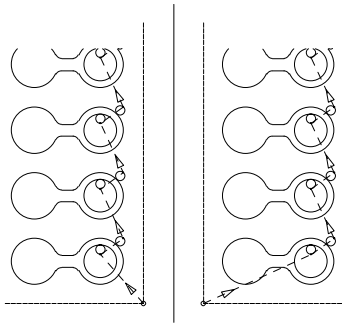

1. CENTER DISTANCE : (Inches or millimeters)
2. OUTER DIAMETER : (Inches or millimeters)
3. INNER DIAMETER : (Inches or millimeters)
4. THICKNESS DIMENSION : (Inches or millimeters)
5. RADIUS DIMENSION : (Inches or millimeters)
6. KERF DIMENSION : (Width of cutting tool path)
7. SCRAP DIMENSION : (Distance between parts, in/mm)
8. LEAD-IN DIMENSION : (Inches or millimeters)
9. LEAD-IN POINT 1 (P1) : (YES or NO)
10. LEAD-IN POINT 2 (P2) : (YES or NO)
11. LEAD-OUT : (YES or NO)
12. VERIFY- YES/NO : (YES or NO)

NOTES:

- If an INNER DIAMETER of 0 is defined, no hole is cut.
- If LEAD-IN POINT 1 is selected, the prompt for LEAD-IN POINT 2 is not displayed.
- If NO is selected for both optional LEAD-IN POINTS, then the default LEAD-IN POINT 0 position is used.

SHAPE 50 : DAMPER

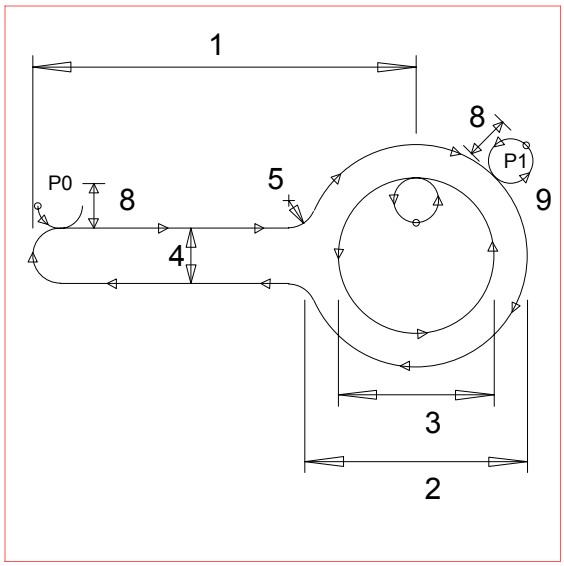

REPEAT PATTERNS

PLATE SIDE

LEFT RIGHT

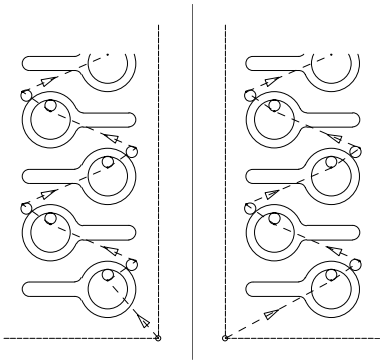

1. HANDLE CENTER DIST. : (Inches or millimeters)
2. OUTER DIAMETER : (Inches or millimeters)
3. INNER DIAMETER : (Inches or millimeters)
4. THICKNESS DIMENSION : (Inches or millimeters)
5. RADIUS DIMENSION : (Inches or millimeters)
6. KERF DIMENSION : (Width of cutting tool path)
7. SCRAP DIMENSION : (Distance between parts, in/mm)
8. LEAD-IN DIMENSION : (Inches or millimeters)
9. LEAD-IN POINT 1 (P1) : (YES or NO)
10. LEAD-OUT : (YES or NO)
11. VERIFY- YES/NO : (YES or NO)

NOTES:

- If an INNER DIAMETER of 0 is defined, no hole is cut.
- If NO is selected for the LEAD-IN POINT 1 position prompt, the default LEAD-IN POINT 0 position is used.

SHAPE 51 : RECTANGLE

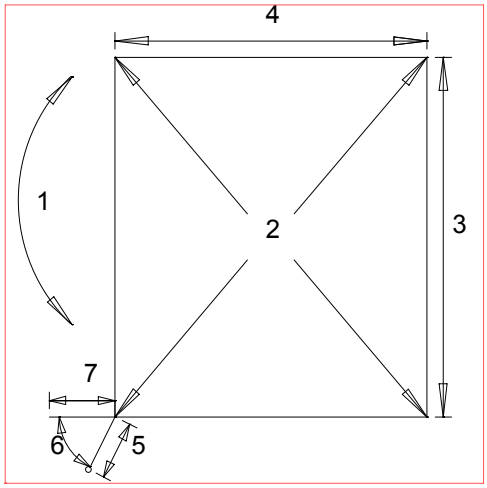

REPEAT PATTERNS

AUTO MANUAL

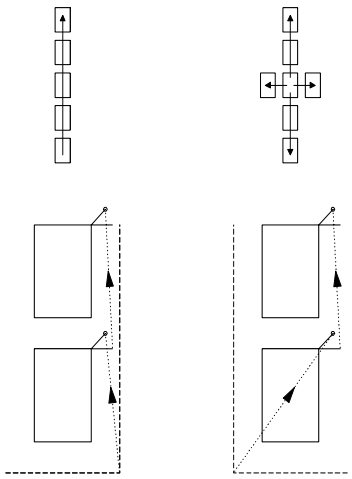

1. CUT DIRECTION : (Clockwise or counter-clockwise)
2. STARTING POSITION : (1 of 4 corners)
3. X DIMENSION : (Inches or millimeters)
4. Y DIMENSION : (Inches or millimeters)
5. LEAD-IN DIMENSION : (Inches or millimeters)
6. LEAD-IN ANGLE (DEGS) : (0 to 90 degrees)
7. LEAD-OUT DIMENSION : (Inches or millimeters)
8. SCRAP DIMENSION : (Distance between parts, in/mm)
9. KERF DIMENSION : (Width of cutting tool path)
10. REPEAT MODE : (Automatic or manual positioning)

IF AUTO REPEAT MODE:

11. VERIFY- YES/NO

IF MANUAL REPEAT MODE:

: 11. Repeat direction: (1 of 4 sides)
12. VERIFY- YES/NO

NOTES:

- The STARTING CORNER and REPEAT DIRECTION parameters can be directly entered with the numeric keypad. Direction arrows are provided for quick reference.
- When defining the LEAD-IN ANGLE, 0 degrees is parallel to the Y axis and 90 degrees is parallel to the X axis.
- The LEAD-OUT position is determined by the direction of the cut. It is either parallel to the last side cut (as shown) or 45 degrees from the last cut direction.
- When running the resulting NC part program, position the torches at the corner of the plate, regardless of the REPEAT MODE selected. From this corner, the program moves out to the actual pierce point.

SHAPE 52 : CIRCLE

REPEAT PATTERNS

AUTO MANUAL

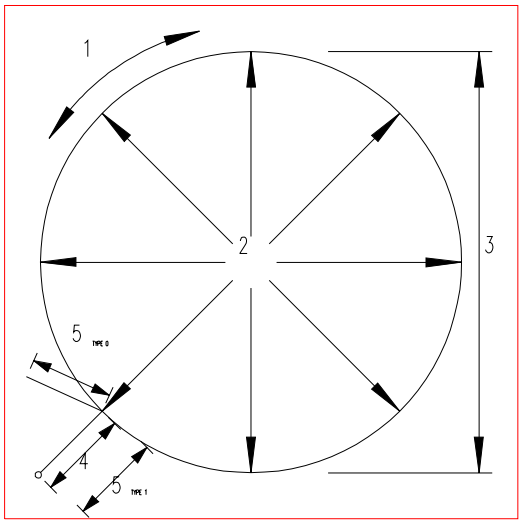

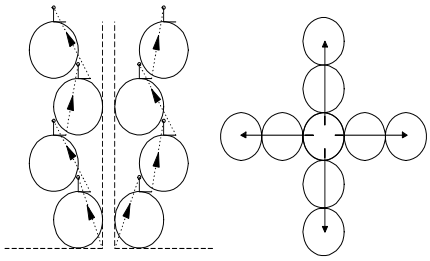

1. CUT DIRECTION (OD) : (Clockwise or counter-clockwise)
2. STARTING POSITION : (1 of 8 corners)
3. DIAMETER DIMENSION : (Inches or millimeters)
4. LEAD-IN DIMENSION : (Inches or millimeters)
5. LEAD-OUT DIMENSION : (Inches or millimeters)
6. LEAD-OUT TYPE : (0 or 1)
8. SCRAP DIMENSION : (Distance between parts, in/mm)
9. KERF DIMENSION : (Width of cutting tool path)
10. REPEAT MODE : (Automatic or manual positioning)

IF AUTO REPEAT MODE:

11. VERIFY- YES/NO

IF MANUAL REPEAT MODE:

: 11. Repeat direction: (1 of 4 points)
12. VERIFY- YES/NO

NOTES:

- The STARTING CORNER and REPEAT DIRECTION parameters can be directly entered with the numeric keypad. Direction arrows are provided for quick reference.
- The actual LEAD-OUT position is determined by the direction of the cut. The figure above shows the LEAD-OUT position assuming a clockwise cutting direction has been selected.
- When running the resulting NC part program, position the torches at the corner of the plate, regardless of the REPEAT MODE selected. From this position, the program moves out to the actual pierce point.
- When performing AUTO REPEAT mode operations, parts are shifted to the left and right at a 60 degree angle to minimize the amount of scrap between parts.

LEAD-OUT TYPE 0 is 10 degrees to tangent. LEAD-OUT TYPE 1 follows LEAD-IN path.

SHAPE 53 : RING

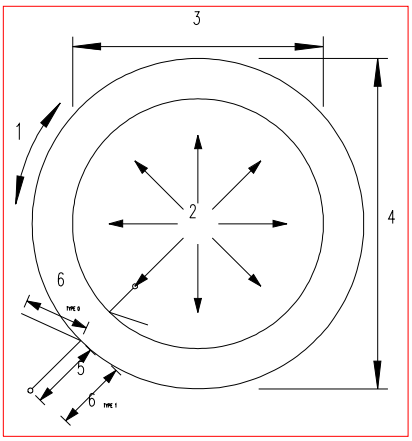

REPEAT PATTERNS

AUTO MANUAL

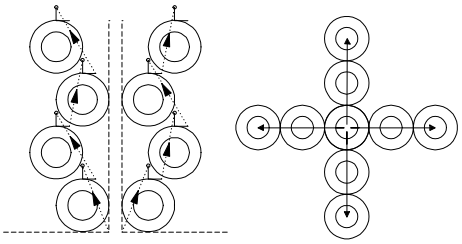

1. CUT DIRECTION : (Clockwise or counter-clockwise)
2. STARTING POSITION : (1 of 8 points)
3. INNER DIAMETER SIZE : (Inches or millimeters)
4. OUTER DIAMETER SIZE : (Inches or millimeters)
5. LEAD-IN DIMENSION : (Inches or millimeters)
6. LEAD-OUT DIMENSION : (Inches or millimeters)
7. LEAD-OUT TYPE : (0 or 1)
8. SCRAP DIMENSION : (Distance between parts, in/mm)
9. KERF DIMENSION : (Width of cutting tool path)
10. REPEAT MODE : (Automatic or manual positioning)

IF AUTO REPEAT MODE:

11. VERIFY- YES/NO

IF MANUAL REPEAT MODE:

: 11. Repeat direction: (1 of 4 points)
12. VERIFY- YES/NO

NOTES:

- The CUT DIRECTION prompt defines the outer diameter cut direction. The inner direction is always opposite so that the same KERF side (LEFT/RIGHT) can be used for both cuts.
- The STARTING POSITION and REPEAT DIRECTION parameters can be directly entered with the numeric keypad.
- The actual LEAD-OUT position is determined by the direction of the cut. The figure above shows the LEAD-OUT position assuming a clockwise cutting direction has been selected.
- When running the resulting NC part program, position the torches at the CENTER of the first part, regardless of the REPEAT MODE selected.
- When performing AUTO REPEAT mode operations, parts are shifted to the left and right at a 60 degree angle.
- LEAD-OUT TYPE 0 is 10 degrees to tangent. LEAD-OUT TYPE 1 follows LEAD-IN path.

BLANK

RUNNING A PROGRAM

This section of the manual describes the procedures used to cut the desired shape, which occurs after the shape has been selected and all necessary data entered, or after a new part has been constructed.

PLASMA-OXYGEN/FUEL SELECTION

Most machines equipped with a **1250** only use one type of cutting process, either plasma or oxygen/fuel. In these cases, the system setup parameters can be set so that the correct cutting mode is selected automatically.

If the machine has both cutting systems, however, the screen displays the prompt **SELECT- PLASMA** or **SELECT- OXY/FUEL**.

Use the <+/-> key to toggle the display to the correct type.

NOTE: This does not actually switch the cutting function of the machine, only the prompting and relay sequencing used during the part execution. You must ensure that the correct cutting process is enabled on the machine.

At this point, the feature codes are checked to see if any optional features are enabled in the **1250**. If none are enabled, continue at section DIAL-IN-KERF to select the desired cutting mode. Otherwise, follow the directions that follow for each feature.

GEOMETRY MODIFICATION OPTIONS

There are several features that allow the geometric appearance of a part to be altered:

SCALING	Allows the part size to be magnified up to 65 times or reduced to .001 size.
ROTATION	Allows the part to be rotated from its programmed orientation to allow alignment with the plate or nesting among other parts.
MIRROR	Allows the part to be mirror-imaged in either the X or Y axis, or both axes.

These operations are enabled with the ENHANCED OPERATION option. When this feature is enabled, the prompt **GEOMETRY - NORMAL** is displayed when the part is first run. The word **NORMAL** flashes.

Press the <+/-> key to toggle between **GEOMETRY - NORMAL** and **GEOMETRY - SPECIAL**. Press <ENTER> when you have chosen either **NORMAL** or **SPECIAL**.

If you select **NORMAL** and press <ENTER>, the part is cut as it is programmed, which basically means that:

SCALE = 1.00	X MIRROR - NO
ROTATE = 0.00 DEGREES	Y MIRROR - NO

and prompting for SPECIAL GEOMETRY ends.

If you select **SPECIAL** and press <ENTER>, you will be prompted for scale, rotation, X mirror, and Y mirror.

Once you run a program with one of the special geometric operations, the display continues to show **SPECIAL**. You must set the special option back to normal conditions before the display shows **NORMAL** again.

SCALING

If the SCALING feature is enabled on the system, the control displays the prompt **SCALE=XX.**XXX. The displayed value is the scale factor used the last time that particular program was run. The scale factor is used to enlarge or reduce the size of the entire part, either to produce a different size, or to allow a test run. The value entered is used as a multiplier for all part dimensions, therefore:

If SCALE = 1.000	The part is the original 1:1 size,
If SCALE = 10.000	The part is 10 times the original size, and
If SCALE = .125	The part is 1/8 the original size.

Scale values may range from 0.001 to 65.000.

Enter the desired scale value. Use 1.000 for the original size.

PART ROTATION OPTION

If the PART ROTATION feature is enabled, the control displays the prompt **ROTATE-+XXX.XX** for the desired rotation angle. Enter the desired rotation degrees. **0.00** is the original programmed position. A positive angle indicates a counter-clockwise rotation. A negative angle may also be entered for a clockwise rotation, however it will be converted to its equivalent positive angle position. When the part is run again, the positive equivalent angle is displayed, not the negative. For example, if -45.00 degrees is entered for the rotation, it is stored as +315.00.

X/Y AXIS MIRROR OPTION

If the MIRROR IMAGE feature is enabled, two prompts are displayed. The first is for the X axis: **X MIRROR- NO**. Press the <+/-> key to toggle between the flashing **NO** and **YES**. Press the <ENTER> key when the desired response is shown. If you choose **NO**, the X axis is cut as programmed. If you choose **YES**, the X axis is inverted so the part appears upside-down on the plate.

After the X mirror selection is entered, the prompt changes to: **Y MIRROR-NO**. Again, press the <+/-> key to toggle between the flashing **NO** and **YES**. Press <ENTER> when the desired response is shown. If you choose **NO**, the Y axis is cut as programmed. If you choose **YES**, the Y axis is mirrored from the left to right.

KNIFE COMPENSATION OPTION

The KNIFE COMPENSATION feature allows a special swivel knife compensation routine that modifies the cut path to produce sharp corners rather than rounded corners caused by the knife's offset from center.

DIAL-IN-KERF STANDARD FEATURE

The DIAL IN KERF feature allows kerf compensation to be added to the shape to be cut. In order for the prompt to appear, the program must contain a kerf code, such as KERF LEFT or KERF RIGHT (G41 or G42 in Word Address or function 29 or 30 in ESSI). When the program contains such a code, the prompt **KERF= +XX.XXXX** is displayed. The value that is displayed is the kerf used the last time the part was run.

The kerf value to enter is the total width of the path created by the cutting process. This value can be derived by cutting a 4" square with no kerf entered, and then measuring the actual size. The difference between the actual size and the input dimension size is the kerf value. Enter this value as a positive (+) kerf dimension. This alters the cut path and causes the actual piece to have the correct dimensions.

A negative kerf value can also be entered, however this is normally not done. If entered, it shrinks the size of the part, rather than increasing it. This can be useful if a part is programmed with too large a kerf in the dimensions. A negative kerf value counteracts the programmed kerf, shrinking the part to the correct size.

CUTTING MODE SELECTION

Once any optional parameters are entered, the **1250** performs the necessary processing and then prompts you to select the desired CUTTING MODE from the following menu:

- MANUAL CUT
- AUTO CUT
- TEST RUN
- SINGLE STEP

Each of these cutting modes are described in the sections that follow.

MANUAL CUT

The manual cut mode allows you to preheat and manually start the cutting process, using the machine's cutting controls.

You will see the display **PIERCE = XXX.XX**. Enter the desired pierce ramp time, which affects the acceleration of the machine when the cutting process is turned on to pierce the material. If you enter **0.00**, the machine waits for the cutting process to be turned on, and then accelerates quickly to the selected cutting speed. This is acceptable for thinner material, since it is pierced almost instantly when the process is turned on.

On thicker material, however, it takes a considerable amount of time to burn down through the metal. If the machine moves too fast at this point, the beginning portion of the part will not be cut completely.

Entering a pierce ramp time causes the machine to slowly accelerate from the pierce location. The machine starts from its halted position when the process is turned on, and accelerates up to the desired cutting speed in the time entered for the PIERCE RAMP time. By setting this value sufficiently long, the material is pierced during the lead-in portion of the cut so that by the time the machine has reached the actual part, the material is cut all the way through.

NOTE: The **1250** can also use the PIERCE RAMP time as a HOLD TIME for oxygen/fuel and/or plasma cutting instead of a PIERCE RAMP time. This allows you to enter a pierce time that causes the machine to hold position instead of starting motion as soon as the cut starts. See SD62 SYSTEM CONFG2, digit 8, in the INSTALLATION AND SETUP chapter.

AUTO CUT

The auto cut mode allows you to cut the part with all preheat and cutting processes being started and stopped by the **1250**.

Depending on whether oxygen/fuel or plasma cutting is being done, prompts for the values that control the automatic piercing cycle are displayed next. These include PREHEAT, PIERCE RAMP, and PART COUNT.

HIGH PREHEAT (OXYGEN/FUEL)

If you have selected oxygen/fuel cutting, you are first prompted for the duration of the HIGH PREHEAT cycle. The control displays **PREHEAT= XXX.XX**. Enter the time in seconds for the HIGH PREHEAT cycle. When the control moves to a new pierce point, it automatically turns on the high preheat solenoids for the time specified. When the preheat cycle is complete, the high preheat solenoids turn off and the cutting oxygen is turned on.

PIERCE RAMP (OXYGEN/FUEL OR PLASMA)

Regardless of the cutting process, you are prompted for the PIERCE RAMP time. See the description under MANUAL CUT MODE for information on the PIERCE RAMP time.

PART COUNT (ALL CUTTING PROCESS)

Regardless of the cutting process, you are then prompted for **HOW MANY- XXX** parts. Enter the desired number of part cycles to produce the required parts. For example, if you want 100 parts and have four torches cutting, enter **25** to get the correct count. If an additional part is required after the preset count is reached. press <CYCLE START> to cut one more part.

TEST RUN

TEST RUN allows the same machine movements as during a cut, however all cutting outputs are prohibited. This is useful to check and correct the position of the part on the material to be cut.

SINGLE STEP

SINGLE STEP mode is similar to TEST RUN, however only one program move is executed each time you press <CYCLE START>. You can then check the dimensions at the end of each data block.

CYCLE START

After the desired cutting mode is selected, and the required data (PREHEAT, PIERCE RAMP, etc.) have been entered, press <ENTER> to cut the part.

The control now displays the prompt **PRESS CYCLE START**.

If the PLATE ALIGNMENT feature is not enabled in the control, locate the machine at the starting position on the plate (usually the lower corner) before you press <CYCLE START>. This starts program execution. Continue at RUNNING THE PART.

PLATE ALIGNMENT FEATURE

The PLATE ALIGNMENT feature compensates for plates that are not squared with the cutting machine. Without this option, the plate must be carefully aligned to be parallel with the main rail or else the parts may run off the edge as the cutting progresses down the rail. The PLATE ALIGNMENT feature rotates the part program so it follows the angle of the plate. This not only ensures that the parts cut correctly, but also reduces setup time, since the plate no longer has to be squared to the machine.

To perform this alignment, instead of pressing the <CYCLE START> key as the display is prompting, press <SHF> and then <CYCLE STOP>. This two-key combination enters the alignment mode. The display now prompts:

MOVE MACHINE TO

FIRST CORNER

THEN PRESS -1

OR 3 -SAME ANGLE

If you press <3>, the plate angle calculated for the previous part is used. This feature can be used for cutting several different parts on the same plate.

The control then displays the prompt:

ANGLE= +/- XXX.XX

PRESS ENTER IF OK

When you press <ENTER>, the cut process prompting continues.

To align to a new plate, the machine should be aligned with one corner of the material. Normally this should be the starting corner for the program, since the machine automatically returns to this location once the procedure is complete. When positioned, press the number <1> key. The display now changes to:

MOVE MACHINE TO

-SECOND CORNER-

THEN PRESS -2

Jog the machine along the longer edge of the plate since this produces a more accurate indication of the angle of the plate. If you are cutting a large plate, it is not necessary to go all the way to the next corner. Simply move down either edge at least 10 feet and align the machine to the edge of the plate. Although the procedure works if the distance is less, the result is more accurate if a longer distance is used. After the machine is aligned to the second corner (or along the edge), press the number <2> key. Once these two points are identified, the angle of the plate is calculated and displayed as:

ANGLE= +/- XXX.XX

PRESS ENTER IF OK

The angle is positive for counter-clockwise angles and negative for clockwise. Press <ENTER> to align to this angle. This sets the displayed angle as the plate alignment value and then returns the machine to the first corner.

Once the machine stops, the prompting returns to the cut mode selection (manual, auto, etc.), as described in CUTTING MODE SELECTION. Enter the appropriate selection for the cutting mode and press <ENTER>. The display changes again to prompt for the <CYCLE START> key. It also displays the PLATE ANGLE:

PRESS CYCLE GO

PLATE ANG= +/- XXX.XX

Press <CYCLE START> key to begin the program. The parts now follow the angle of the plate and cut correctly.

While cutting the part, the display shows the current status of the machine. In addition, if a condition is preventing the operation from continuing, a **WAIT** display is shown along with the condition causing the **WAIT**. The following is a list of these displays, along with a brief explanation of each:

STOP- * E-STOP *	The EMERGENCY STOP has been activated. This shuts down the **1250** drives.
CAUTION:	This does not shut off the AC power input. It only disables the drives and cutting functions.
STOP- HOLD POS	The program execution has been stopped. The machine is holding position.
RUN- TEST RUN	The program is executing a test run of the program.
RUN- VENT XXX.X	The program is running. The OXYGEN BLEEDOFF TIMER is counting down. The machine is holding position.
RUN- TRAVERSE	The program is running. The current block is non-cutting. The machine is running at high traverse speed.
RUN- OXY CUT	The program is running. The machine is cutting in MANUAL OXYGEN/FUEL MODE. The machine's <SPEED> key controls feedrate.

RUN- PRHT XXX.X	The program is running. The machine is holding position and AUTO-CUTTING HIGH PREHEAT is in progress.
RUN- AUTO OXY CUT	The program is running. The machine is cutting in AUTOMATIC OXYGEN/FUEL MODE.
RUN- BACKUP	The program is running, but the <BACK UP> key has been pressed, causing the machine to re-trace cut path backward. Speed is limited by setup value.
RUN- DWELL XXX.X	The program is running. The **1250** is holding machine position and waiting for the PROGRAMMED DWELL timer to reach 0 before continuing along the programmed path.
WAIT- CUT SW OFF	The program is running, and cutting is selected. The **1250** is waiting for the cut switch to be turned on before starting to move. (On some systems the cut can be started by pressing the <CYCLE START> key again.) The machine is holding position.
WAIT- CUT SW ON	The program is running, and cutting is selected. The **1250** has finished one cut, moved to a new pierce location, and is waiting for the cut switch input to be turned off, then back on to start the new cut. The machine is holding position.
WAIT- START XXX	Motion is being delayed until timer reaches 0.
RUN- PLASMA CUT	The program is running. Plasma cut is in progress. The feedrate is controlled by the <SPEED> key.
RUN- DELAY XXX.X	The program is running. A PLASMA ARC ON sense has been received. The machine holds position until the timer reaches 0 and then begins moving along cut path.
RUN- ARCOFF XXX.X	The program is running. Plasma cutting is being done, but the PLASMA ARC ON sense has turned off, probably indicating that the arc has gone out. The machine continues along the cutting path as if the arc were still on, until the timer reaches 0.00. The **1250** then stops the machine and performs a <CYCLE STOP>.
RUN- PLASMA START	The program is running. AUTO CUT was selected and the start signal has been sent to the plasma system. The PLASMA ARC ON input has not yet been received.
RUN- PIERCE XXX.X	The program is running. Oxygen/fuel cutting is selected. The torch has just pierced at a new location and is slowly accelerating up to the selected cutting speed based on the entered PIERCE RAMP TIME value.
RUN-RTN TO PATH	The program is running, but this display occurs for two reasons. If you press <CYCLE STOP> and jog the machine away from the programmed path, and then press <CYCLE START>, this message is displayed until the machine has moved back to the correct position. This message is also displayed if the machine drifts away from the correct position when it is supposed to be

	holding position (waiting for cutting oxygen switch to be turned on).
NOTE:	If this message is displayed when a program is running, and the machine appears to be stalled, it indicates that the **1250** is unable to return the machine to the correct position. This can occur if there is a large amount of drift in the drives or if there is some kind of mechanical bind or interference.

RUNNING DESCRIPTION

Due to the variations between cutting machines, it is not possible to give an exact description of the operating sequences to be used while running a part. The following descriptions serve to illustrate the various control functions and typical operating sequences.

If MANUAL CUT mode is selected, the program moves to the pierce point and waits for you to start the cut. At the end of the cut, the cutting process stops automatically and the machine advances to the next pierce position. When it reaches the new point, the cut switch must be turned off and back on to restart the cut.

- For oxygen/fuel cutting, you must manually start the cutting oxygen using the machine's cutting oxygen switch or controls. The **1250** automatically turns the cut off at the end, or you can stop the cut by turning off the machine's cutting oxygen switch.
- For plasma cutting, you must manually start the plasma cut. This can be done in one of two ways. If the machine is equipped with a separate plasma control station, the cut can be started by pressing the <START> button on the plasma operator's console. The plasma cut can also be started manually by pressing the <CYCLE START> key on the **1250**. This allows manual cutting to be done on machines that do not have a separate manual control station.

If AUTO CUT is selected, the program advances to a new pierce point and then automatically turns on the cutting process. If oxygen/fuel cutting is being done, the high preheat turns on for the specified time and then the cutting oxygen. To extend or shorten the high preheat time, press and hold the <CYCLE START> key for the desired preheat time. To shorten the time, press and release the <CYCLE START> key when the cut is to start.

If TEST RUN is selected, the program begins running with all cutting functions suspended. The program steps that would be cut are run at the speed set on the machine's <SPEED> key, while traverse moves are done at the high traverse speed.

If SINGLE STEP is selected, the program executes one program step each time <CYCLE START> is pressed.

In either TEST RUN or SINGLE STEP modes, the part may be repositioned on the plate as follows:

Allow the machine to run through the program to a point where it is apparent that the part needs to be moved to keep it on the available plate. Then press <CYCLE STOP> to stop the machine at that point. Now use the jog function to move the torch to the

desired position on the plate. Once it is in the correct position, press <CYCLE START> to continue the test run. This process of stopping the test, jogging the torch and then continuing may be repeated as many times as needed to position the part correctly. Once the part is positioned, press <CYCLE STOP> and then the <PART RETURN> key three times to return to the home position of the part. Press <CYCLE STOP> again to return to the main cutting prompts and select the desired cutting mode.

The <PART RETURN> key actually allows returning to one of three different positions on the part being cut.

One press of <PART RETURN> returns to the most recent pierce point on the part. The message **RETURN- PIERCE** is displayed.

The second press of <PART RETURN> returns to the start point of the current part. The message **RETURN- START** is displayed.

The third press of <PART RETURN> returns to the home position on the selected cutting table. The message **RETURN- HOME** is displayed.

NOTE: Press <SHF><PART RETURN> to return to Table #1 home reference position (0,0).

The <BACK UP> key can be used in CUT, TEST RUN, or SINGLE STEP to retrace the cut path, to either verify positioning or in the case of a lost cut. When pressed as the part is running forward, the machine backs up at a preset speed as long as the key is held. When the desired point is reached, release the key and restart the cut.

NOTE: The <BACK UP> key does not work if <CYCLE STOP> is pressed.

To stop the program at any point, press <CYCLE STOP>. To continue, press <CYCLE START> again.

After stopping, it is possible to jog away from the part (to clean a torch tip for instance). If you then press <BACK UP>, the machine returns directly to the position where it was jogged from. Press <CYCLE START> to continue cutting the part.

To stop executing the program and return to the top prompting level, press <RECYCLE>.

BLANK

PROGRAM TEXT EDITOR

PROGRAM EDITING

The EDIT/NEW function allows the **1250** to create and edit programs in NC Program Memory.

To enter this mode, press the <ENTER> key when **EDIT/NEW** is displayed. The message **EDIT- XXXXXXXX** is then displayed, the last used program. Select the desired program number from those in memory by using the UP and DOWN scroll arrow keys to scroll through the list, or enter a new program number that does not exist to create a new program and press <ENTER>.

Once a program is selected, the first data block is displayed and editing can begin.

MAIN DATA BLOCK DISPLAY

The editor has the ability to do two basic operations. It can display a list of data blocks in memory, and it can edit a specific block of information.

In DISPLAY MODE, the screen displays the internal block number on the left side. This number indicates the position of the block in the program. For example, the fifth block in any part program is displayed as **B0005**.

To display a particular block, use the UP and DOWN scroll arrow keys to scroll up and down through the program. Each time you press a scroll arrow key, the new block number and the type of information contained in the block is shown.

The numeric keypad can also be used to quickly access a particular block. Enter the desired block number on the keypad. When the first digit is pressed, the screen displays:

GO TO- B####

After the correct value is displayed, press <ENTER>. The specified block is then displayed.

If you enter a block number past the end of the program, or if you use the UP and DOWN scroll arrow keys to step past the end or beginning of the program, a brief message appears indicating the condition and then the previous block is displayed.

If you reach the program end, the screen displays **PROGRAM END** and then backs up to the last block in the program.

If you scroll past the beginning of the program, the screen displays **PROGRAM TOP** and then displays the first program block.

While you are in MAIN DATA BLOCK DISPLAY mode, the left side of the display shows the block number while the right side shows a variety of information depending on the type of block: LINE, ARC, or FUNCTION. For the following examples, assume that the data block displayed is the fifth internal block in the program.

For LINE moves, the display shows **B0005 - LINE +X +Y**. This means that the block causes a linear movement. The remainder of the block shows the signed dimensions present in the data block. The actual dimensions are not shown at this point so that you can quickly scan through the data blocks without having to look for specific dimensions. To look at the actual X/Y dimensions, the block must be selected for editing as described later.

For ARC moves, the display alternates between **B0005 - CW/CCW ARC** and **B0005- +X +Y +I +J**. The first display shows the direction of the arc, either clockwise or counter-clockwise. The second display shows the signed dimensions present in the data block. Again, to avoid extra displays, the individual dimensions are not shown at this point. As with LINE moves, the block must be selected for editing to see the actual X/Y/I/J dimensions.

For FUNCTION data blocks, there are several possible displays.

B0005- **NAME -F##**	In this display, the **NAME** and F## are one of the functions listed at the end of this section. For example, if block 5 performed the CUT ON function, the display would show **B0005- CUT ON -F06**
B0005- INTERNAL C0	Internal functions have been created by the **1250**. Although they are displayed, they cannot be edited or deleted since they are essential to the program's execution. Normally they should be ignored.

EDITING COMMANDS

After the desired block is displayed, the data may be displayed and changed if necessary.

To edit the block being displayed, press the <.> (decimal point) key and then press <ENTER>. This two-key combination is used to prevent accidental editing of a data block. If the block is a line or arc, continue at section: ***LINE/ARC BLOCK EDITING.*** If the block is a function, continue at section: ***FUNCTION BLOCK EDITING.***

To abort the edit process without altering the block data, press the <RECYCLE> key. This returns the control to the MAIN BLOCK DISPLAY without altering the data.

LINE/ARC BLOCK EDITING

If the selected data block is a line or arc, the following sequence of prompts appears.

X DIM= ########	Displays the current X dimension. Enter a new value if desired.
Y DIM= ########	Displays the current Y dimension. Enter a new value if desired.

I DIM= ########	Displays the current I dimension, which is the distance from the start point to the center of an arc along the X axis. This value must be 0.00 for line blocks, since including an I or J dimension in a data block causes an arc. Although the input block may have been a line, the prompts for the I and J dimensions appear. Enter a new value if desired.
J DIM= ########	Displays the current J dimension, which is the distance from the start point to the center of an arc along the Y axis. See the comments for I dimension above.
ARC DIRECTION CW/CCW	This prompt only appears if either the I or J dimension is not 0.00, which indicates an arc data block. If both are 0, the block is a line and thus has no arc direction. To toggle between **CW** and **CCW**, press the <+/-> to display the desired direction. Then press <ENTER>.
VERIFY- YES/NO	After all the previous prompts have occurred, the verify prompt is displayed. Use the <+/-> key to toggle between the **YES/NO** response and then press <ENTER>. A **YES** response causes the X/Y/I/J prompting to restart so the dimensions can be verified and changed again if necessary. A **NO** response ends the editing of the data block and stores the results in NC Program Memory.

NOTE: If only the <ENTER> key is pressed for each prompt, and none of the data values are changed, the original block is not replaced in NC Program Memory. However, if any of the dimensions or arc direction values are changed, a new data block is created and the entire original block is replaced.

After all the prompts are entered, and the **VERIFY- NO** response entered, the readout returns to the MAIN DATA BLOCK display.

FUNCTION BLOCK EDITING

If the block being edited is a function (such as CUTON, KRFLFT, etc.), the following prompt **FNC- ## - NAME** is displayed. The ## digits contain the function number from the list at the end of this section. The function name is displayed on the right side. Some examples are:

FNC- 03 - CHNTOP	Function 03 - CHAIN TOP
FNC- 05 - CUTOFF	Function 05 - CUTTING OFF

To change the function, use the UP and DOWN scroll arrow keys to scroll up or down through the list of functions given in the list (at the end of this section). Each time you press UP or DOWN, the next function number and name from the list is displayed.

Consequently, there is no need to memorize the function codes since you can scroll through the list for the desired value.

Instead of scrolling to the desired function, the function number can be entered directly on the keypad. As soon as the number entry starts, the display changes to **FUNCTION- ##** with the numbers being entered in the ## digits.

Once the desired value Is displayed, press <ENTER>. The display returns to **FNC- ## - NAME** display described above.

After the desired function is displayed, either by scrolling through the list or by entering the desired function number directly, press <ENTER>. In most cases, this finishes the editing process for the function and replaces the original data block with the new function code. Once this is done, the display returns to the MAIN DATA BLOCK display and the new function code is shown.

DELETING A BLOCK

If it is necessary to delete a block from the program, the desired block should first be displayed as described in **MAIN DATA BLOCK DISPLAY**. When it is displayed, press the <CE> key. The display changes to **0000 TO DELETE**. Press <ENTER>. The display prompts you again to ensure that the block is not deleted by accident.

For example, if you wish to delete data block five, the display will show **DELETE B0005- NO.** If you press <ENTER> at this point, the **1250** aborts the delete and does not alter the program in any way. To continue the delete process, press the <+/-> key to toggle the selection to **YES**, and then press <ENTER>. The indicated block is erased from NC Program Memory. All following blocks move up one number so block 6 becomes block 5, and so on. The display now returns to the MAIN BLOCK DISPLAY.

INSERTING A DATA BLOCK

The INSERT function allows you to add data blocks to the program, either above or below any other data block in the program. No blocks may be added, however, above the PROGRAM START or after the PROGRAM END.

- To insert a block above the current block shown on the MAIN BLOCK DISPLAY, first press <SHF> and then the UP scroll arrow.
- To insert a block below the current block shown on the MAIN BLOCK DISPLAY, first press <SHF> and then the DOWN scroll arrow.

After the two-key combination is pressed, the control prompts for the type of block to be inserted, either a LINE/ARC BLOCK or a FUNCTION. (Since the only difference between line and arc blocks is the I and J dimensions, they are considered the same for the insert function.) The control will display either:

INSERT- LINE/ARC

or

INSERT- FUNCTION

Use the <+/-> key to toggle between the two selections and press <ENTER> when the desired one is displayed. This inserts a blank block into the part program and then goes immediately to the editing function for that block. If a LINE/ARC is inserted, the prompting goes to the **X/Y/I/J/CW-CCW** prompts with all the dimensions set to 0. If a function block is inserted, the prompting switches to the function editing prompts listed in ***FUNCTION BLOCK EDITING***, with the function code set to **PGMNOP-00**. Go to the appropriate section for information on entering the new values.

TERMINATING THE EDITOR

Once the necessary corrections have been made to the program, and the MAIN BLOCK DISPLAY is showing, press the <RECYCLE> key to terminate the editor and return to the main **SELECT FUNCTION** prompt.

If there were no data changes in the program (no deletions, insertions, or any editing of data values), the program can be run immediately with no additional processing. If any data have been changed, however, or if any blocks were inserted or deleted, the DIAL-IN-KERF and ACCEL/DECEL processing must be re-done on the program. Consequently, if a program is edited and then run, the delays associated with the kerf and deceleration programs will occur the first time. After that, the program can be re-run with no delay.

INTERNAL FUNCTION NAMES / CODES

PGMNOP	**00**	**PROGRAM NOP**. No operation. Not normally used during program edit.
UNUSED	**01**	**UNUSED INDEX**. Ignore.
UNUSED	**02**	**UNUSED INDEX**. Ignore.
CHNTOP	**03**	**CHAIN TOP**. This code sets a repeat pointer that is used when the **CHAIN BOTTOM 04** code is executed. If the **03** code is not included in a program, the program returns to the beginning of the program. If this code is included in a program, the repeat returns to that point rather than the top of the program. A prompt **VALUE #1 = 0000** allows for optional loop programming. Normally set to 0000.
CHNBOT	**04**	**CHAIN BOTTOM**. This code is placed at the end of a program to cause an automatic program repeat when the code is read. If this code is omitted, the program runs until it reaches the PROGRAM END code and then stops. You will have to press the <CYCLE START> key to cut another part.
CUTOFF	**05**	**CUTTING OFF**. Turns off the cutting process.
CUTON	**06**	**CUTTING ON**. Turns on the cutting process.
KRFOFF	**07**	**KERF OFF**. The KERF OFF function is automatically done each time the cutting is turned off. Consequently, there is normally no need for a separate KERF OFF code in the program. It is normally only used with the AUXILIARY CODE CONVERSION feature.
KRFLFT	**08**	**KERF LEFT**. Sets the kerf direction to the left of the path for the DIAL-IN-KERF function.
KRFRHT	**09**	**KERF RIGHT**. Sets the kerf direction to the right of the path for the DIAL-IN-KERF function.
MARKOFF	**10**	**MARKER #1 OFF**. Turns off the #1 marking device.
MRKON	**11**	**MARKER #1 ON**. Turns on the #1 marking device.
OFSOFF	**12**	**OFFSET #1 OFF**. Cancels the #1 marker offset and moves the machine back to the cutting position. The prompt **VAL 1=0000** is used to select 1 of 8 offsets. See SD80 - SD96 in INSTALLATION AND SETUP.

OFSON	**13**	**OFFSET #1 ON**. Turns on the #1 marker offset and moves the machine to the offset position. The prompt **VAL 1=0000** is used to select 1 of 8 offsets. See SD80 - SD96 in INSTALLATION AND SETUP.
INCH	**14**	**INCH DIMENSIONS**. This affects the program during the LOAD process only, and indicates that all following dimensions are programmed in INCH units. While this code affects the program dimensions as they are being loaded into memory, once the program is loaded, it serves no purpose. Therefore, editing or deleting this code does not affect the operation of the machine. However, if the program is stored via the RS-232 port, the edited code affects the resulting Word Address or ESSI program. If the program is re-loaded, the changed codes affect the data being loaded into memory.
MMETER	**15**	**MILLIMETER DIMENSIONS**. This affects the program during the LOAD process only, and indicates that all following dimensions are programmed in MILLIMETER. See comments for INCH code **14** above.
ABSDIM	**16**	**ABSOLUTE DIMENSIONS**. This affects the program during the LOAD process only, and indicates that all following dimensions are in ABSOLUTE format. When a program is being loaded, all dimensions are saved as ABSOLUTE movements, even if the input program uses INCREMENTAL dimensions. Therefore, once the program is loaded, this code serves no purpose. Editing or deleting this code does not affect the operation of the machine. However, if the program is stored via the RS-232 port, this code is used to re-construct the program so that it appears the same as when it was loaded. Consequently, changing affects the program data as it is being re-loaded into memory.
ABSRPL	**17**	**ABSOLUTE REGISTER PRELOAD**. This affects the program during the LOAD process only. It occurs only in ABSOLUTE dimension programs and is used to reset the absolute zero point to a new location. Since dimensions are not stored in ABSOLUTE format, this code has no affect on the machine after the program is loaded. It is only saved so that the program can be re-constructed when you store to the RS-232 port.

INCDIM	**18**	**INCREMENTAL DIMENSIONS**. This affects programs during the LOAD process only, and indicates that all following program dimensions are in INCREMENTAL format. See comments for ABSDIM code **16** above.
DWELL	**19**	**PROGRAM DWELL**. As a part is being run, this code causes the machine to execute a programmed dwell function. The motion stops, and all relays are maintained in their current state. After the specified dwell time, the program continues execution. The dwell function can also contain a data word that sets the dwell time to be used for this and all following dwell commands until a new time is set. If the time is included in the function block, it is displayed as **VAL 1= XXX.XX** with the time being shown in seconds. When the block is edited, the same value prompt appears that allows the dwell time to be edited as desired.
LEADIN	**20**	**PROGRAMMED LEAD-IN**. This code operates with the DIAL-IN-KERF function, and indicates that the following line or arc block is a LEAD-IN to a part and should not be kerf compensated. This causes the pierce point to remain fixed rather than being offset by the kerf dimension.
PGMSTP	**21**	**PROGRAM STOP**. Causes the machine to stop and all cutting functions to be turned off. You must press < CYCLE START> to resume operation.
PRGMEND	**22**	**PROGRAM END**. This code and the **23** code both indicate the end of the part program. The only difference between these two occurs if the program is stored via the RS-232 port. The **22** PGMEND code is output as a PROGRAM END-NO REWIND function, while the **23** PGMRWND code is output as a PROGRAM END-REWIND. If multiple programs are downloaded, all but the last one must end with the **22** PROGRAM END-NO REWIND code. This allows multiple download operations. The last program in the group normally contains the **23** PROGRAM END-REWIND code, which causes the rewind process to operate. **IMPORTANT:** Do not delete the program end code.
PGMRWD	**23**	**PROGRAM END WITH REWIND**. See description for PGMEND, code **22**.

SPKON	**24**	**DO NOT USE FOR EDITING**. This code is used to set up the optional AUXILIARY CODE CONVERSION tables only and has no other function. Since the same function list is used for both editing and the auxiliary code conversion, it appears in this list.
SPKOFF	**25**	**DO NOT USE FOR EDITING**. See comments for SPKON, code **24**.
MRK2ON	**26**	**MARKER #2 ON**. Turns on the #2 Plate Marking Device.
MRK2OF	**27**	**MARKER #2 OFF**. Turns off the #2 Plate Marking Device.
OFS2ON	**28**	**MARKER #2 OFFSET ON**. Causes the machine to move to the offset dimensions set up for the #2 plate marking device. This shifts the marking device to the current programmed position before any marking move is done.
OFS2OFF	**29**	**MARKER #2 OFFSET OFF**. Cancels the #2 marker offset and moves the cutting torches back to the programmed position.
FUNCTIONS	**30-38**	**NOT USED FOR NORMAL EDITING**.
TB SEL **VAL 1=#**	**39**	**PARAMETER TABLE OVERLAY**. VAL 1=# indicates which parameter overlay is being used. Possible values are 0, 1, 2, 3, 4. **CAUTION:** When a value of 1, 2, 3, or 4 is entered, the corresponding overlay table accessed by SERV41, SERV42, SERV43, and SERV44 must be set up before the program is run.
GOHOME **VAL 1=#**	**40**	**GO HOME**. Indicates which cutting table home the machine should move to. VAL 1=# prompts for cutting table home 1, 2, 3, or 4.
TOOL **VAL 1=#**	**41**	Special for multiple cutting tool operations. VAL 1=# selects the tool code.
KRFDIM **VAL 1=#**	**42**	**PROGRAMMABLE KERF**. A kerf value may be inserted with this function. VAL 1 equals programmed kerf dimensions in the same units as system parameter SD60 (inches or millimeters).
FEEDRT **VAL 1=#**	**43**	**PROGRAMMABLE FEEDRATE**. A feedrate value may be inserted with this function. VAL 1 equals programmed kerf dimensions in the same units as SD60 (inches per minute or millimeters per minute).
HTDIS	**44**	**PLASMA HEIGHT SENSOR DISABLE**.
HTENA	**45**	**PLASMA HEIGHT SENSOR ENABLE**.

LDAUTO VAL 1=#	**46**	**AUTO PROGRAM LOAD FOR LOAD/RUN** operation. VAL 1=# prompts for an 8-digit number of the next program to be loaded.
PMARK1	**47**	**SINGLE PUNCH** auxiliary function on Marker #1. Causes a single punch mark based on marker delay parameter.
	48	No function in the **1250**.
COUNT	**50**	**PART COUNTER INCREMENT**. Signals that a complete part has been cut. This is used in programs where more than one part is programmed as part of a single program. It allows each part to be counted individually.

CREATING A SAMPLE PROGRAM

The following example shows the steps necessary to create a new program using the editor. For simplicity. many of the available entry options as described in the manual are not used.

- Select **EDIT/NEW PROGRAM** from the main menu and press <ENTER>.
- Assign a new part number and press <ENTER>.
- The control provides the first and last blocks of the program. **B0001-INTERNAL C0-PROGRAM START** is displayed.
- To add a new block, press <SHF> and then the DOWN scroll arrow key. The control displays **INSERT LIN/ARC**. Change this to **INSERT FUNCTION** by pressing <+/->.
- To add a function, press <ENTER>. To control displays **FNC-00-PGMNOP**. Press the DOWN scroll arrow key until **FNC-06-CUTON** is displayed. Press <ENTER>. **B-002-CUTON-F06** is now displayed.
- To add a new block, press <SHF> and then the DOWN scroll arrow key. The control displays **INSERT-LIN/ARC**. Change this to **INSERT FUNCTION** by pressing <+/->.
- To add a function, press <ENTER>. The control displays **FNC-00-PGMNOP**. Press the DOWN scroll arrow key until **FNC-08-KRFLFT** is displayed and then press <ENTER>. **B-003-KRFLFT-F08** is displayed.
- To add a new block, press <SHF> and then the DOWN scroll arrow key. The control displays **INSERT-LIN/ARC**. Press <ENTER>. **X-DIM=0000** is displayed.
- Use the numeric keypad to enter the dimension **100**. Press <ENTER>.
- **Y-DIM=0000** is displayed. Press <ENTER>.
- **I-DIM=0000** is displayed. Press <ENTER>.
- **J-DIM=0000** is displayed. Press <ENTER>.
- **VERIFY-YES** is displayed. Press <+/->.
- **VERIFY-NO** is displayed. Press <ENTER>.
- **B-0004-LINE +X** is displayed.
- To add a new block, press <SHF> and then the DOWN scroll arrow key. The control displays **INSERT-LIN/ARC**. Press <ENTER>.
- **X-DIM=0000** is displayed. Press <ENTER>.
- Use the numeric keypad to enter the dimension **80** and press <ENTER>.
- **Y-DIM=0000** is displayed. Press <ENTER>.

- **I-DIM=0000** is displayed. Use the numeric keypad to enter the dimension **40** and press <ENTER>.
- **J-DIM=0000** is displayed. Press <ENTER>.
- **ARC-DIRCT-CW** is displayed. Press <ENTER>.
- **VERIFY-YES** is displayed. Press <+/->.
- **VERIFY-NO** is displayed. Press <ENTER>.
- **B-0005-ARC-CW** is displayed, and then **B-0005- -X -I** is displayed.
- To add a new block, press <SHF> and the DOWN scroll arrow key. The control displays **INSERT-LIN/ARC**. Press <ENTER>.
- **X-DIM=0000** is displayed. Press <ENTER>.
- **Y-DIM=0000** is displayed. Use the numeric keypad to enter the dimension **20** and press <ENTER>.
- **I-DIM=0000** is displayed. Press <ENTER>.
- **J-DIM=0000** is displayed. Press <ENTER>.
- **VERIFY-YES** is displayed. Press <+/->.
- **VERIFY-NO** is displayed. Press <ENTER>.
- **B-0006-LINE +Y** is displayed. To add a new block, press <SHF> and then the DOWN scroll arrow key.
- **INSERT-LIN/ARC** is displayed. Change this to **INSERT- FUNCTION** by pressing <+/->. Press <ENTER>.
- **FNC-00-PGMNOP** is displayed. Press the DOWN scroll arrow key until **FNC-05-CUTOFF** is displayed. Press <ENTER>.
- **B-0007-CUTOFF-F05** is displayed. The program is finished. Press <RECYCLE>.

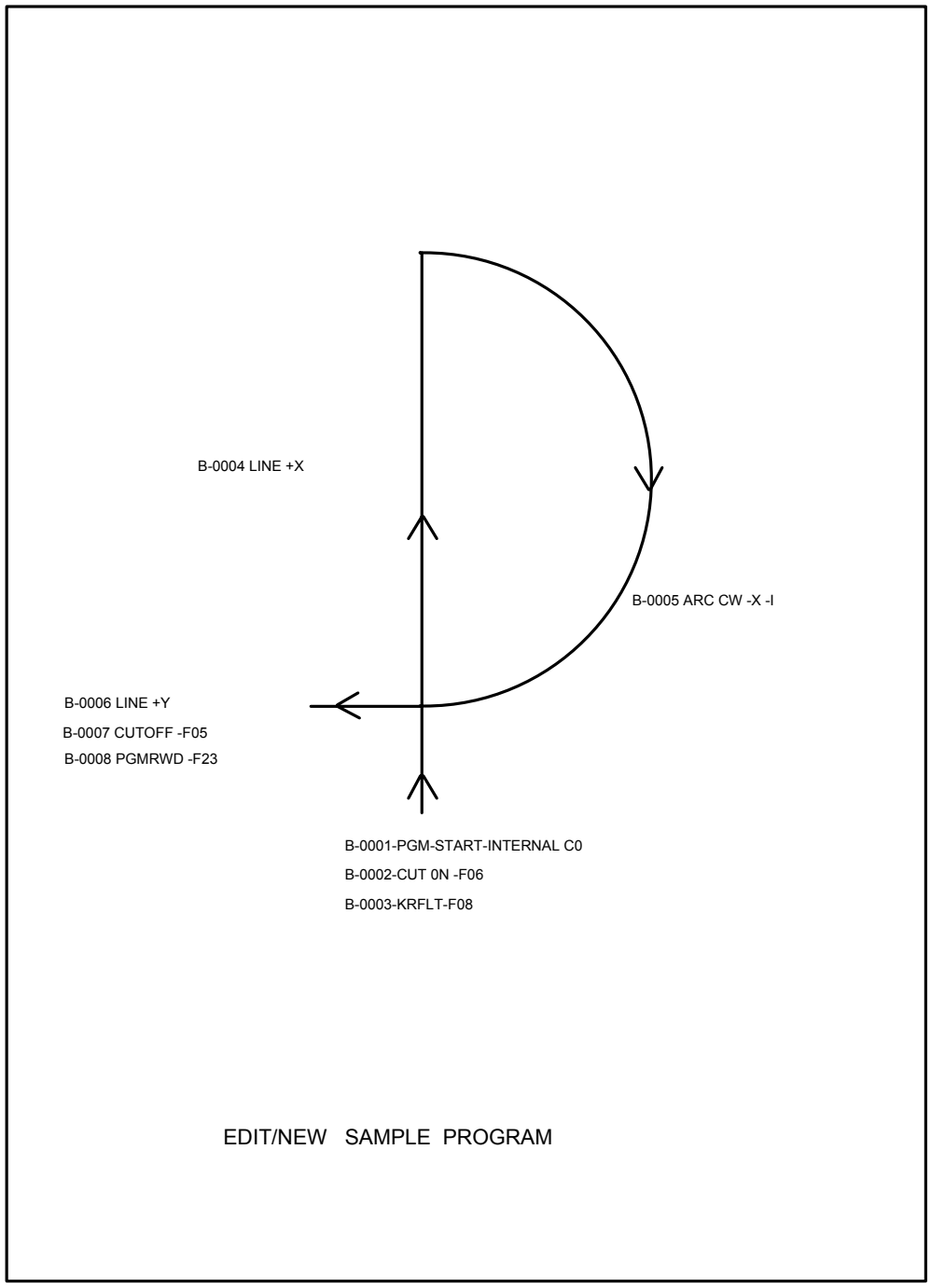
B-0004 LINE +X
B-0005 ARC CW -X -I
B-0006 LINE +Y
B-0007 CUTOFF -F05
B-0008 PGMRWD -F23
B-0001-PGM-START-INTERNAL C0
B-0002-CUT 0N -F06
B-0003-KRFLT-F08
EDIT/NEW SAMPLE PROGRAM

BLANK

DISPLAY MODES

DISPLAY MODE

The DISPLAY MODE is provided as a means of accessing information without interrupting the machine operation. You may press <DSPY> at any time, during any operation. It can be used while a part is being cut to check machine position, cutting speed and other operating parameters, or it can be used to access the diagnostic displays to aid in troubleshooting a problem.

When you press <DSPY>, you are prompted to select the desired display from the following list:

DSPY00-EXIT MODE	DSPY20-EDIT PRGM
DSPY01-X/Y DISPLAY	DSPY30-SHOW WORD
DSPY02-PARTS CUT	DSPY31-SHOW DBL
DSPY03-FEEDRATE	DSPY32-SHOW CRW
DSPY05-SYS. STAT	DSPY33-SHOW BYTE
DSPY10-SYS DATA	DSPY34-SHOW CRUB
DSPY11-DSPY VAR	DSPY80-CONFIG

Either use the UP and DOWN scroll arrow keys to sequence through the list, or enter the two-digit number directly through the keypad. Press <ENTER> when the desired display mode is shown.

DPSY00-EXIT MODE

Use **DISPLAY 00** to cancel the DISPLAY MENU and return to the previous operation.

DSPY01-X/Y DISPLAY

This display shows the current position for both the X and Y axis. When a part is being run, this display shows the distance from the original start point of the part. When no part is being run, the display may be used for direct X/Y measuring. Use the <CE> key to clear both readouts to 0 (zero).

To measure a distance, position the machine at the first location, then clear the X/Y positions by pressing the <CE> key. As the machine is moved, the readout displays the machine's position, referenced from the point where it was cleared.

DSPY02-PARTS CUT

When a part program is being run, this display shows the number of part cycles that have been performed. If only one torch is being used, this is the actual number of parts produced. If multiple torches are used, however, the number of parts that have been cut is the displayed value multiplied by the number of torches.

DSPY03-FEEDRATE

This display shows the current setting of the machine's <SPEED> key in either inches per minute (IPM) or millimeters per minute (MMPM), depending on the SD60 setting.

If DIGITAL FEEDRATE or PROGRAMMABLE FEEDRATE is used, then **DISPLAY 03** allows a new feedrate to be entered via the keypad.

DSPY05-SYS. STATUS

DSPY05- SYSTEM STATUS displays E-STOP error messages. It also displays which part program is being cut if selected while a part program is running.

SERVICE DISPLAYS DSPY10 – DSPY44

These are service and diagnostic displays, which do not allow data entry. See detailed descriptions in the INSTALLATION AND SETUP section of this manual.

DSPY80-CONFIG

DISPLAY 80-CONFIGURE displays the system serial number, software version, and the amount of memory installed in the unit. Press <ENTER> to view a list of all the available features for the system.

When first selected, the display continuously scrolls through the following:

SERIAL xxxxxxxxx	Serial Number
VERSION mm/yy/dd	Software Version
HDW TYPE -10	Hardware version number
____K INSTALLED	Amount of memory

When you first press <ENTER>, display shows **OPTIONS ON/OFF** and then switches to a list of all the available features for the system. Either **ON** or **OFF** next to the name indicates whether or not the feature is enabled. Press <ENTER> or the UP and DOWN scroll arrow keys to scroll through the list.

NOTE: Before you call about a service or operational problem, select **DSPY-80** and write down the serial number and software version displayed on the readout. This will aid the service personnel. Please note that the serial number must be the one displayed on the readout, not one found on a sticker somewhere on the enclosure.

SPECIAL FUNCTIONS

To select the **SPECIAL FUNCTION** mode of the **1250**, you must first be in the RECYCLE state (that is, you must first press <RECYCLE>). Then press the <I> key. Use the UP and DOWN scroll arrow keys or enter the desired number directly to select from the following menu:

FNC00- EXIT MODE	Exits back to main menu.
FNC01- MANUAL CUT	Manual control of cutting outputs or stripping, cutting up remnants, and testing cut control outputs.
FNC15- GO HOME	Return to one of four fixed home reference positions.
FNC16- SET HOME	Reset machine reference (0,0) position after power-failure.

MANUAL CONTROL MODE

The **MANUAL CONTROL MODE** gives you direct control of the cutting control relay outputs. This permits several types of operation:

- Cutting processes (plasma or oxygen/fuel) can be turned **ON** or **OFF** and used in conjunction with the JOG controls to cut up scrap material, or for stripping plate.
- Cutting processes can be turned on before a part program is cut to check gas pressure and cut quality.
- Individual control relays can be turned ON/OFF to aid in installation and troubleshooting.

PLASMA/OXYGEN FUEL CUTTING SELECTION

As described in the section RUNNING THE PROGRAM, there are only three relays in the **1250** for controlling the cutting process. If both oxygen/fuel and plasma are used on a machine, the external circuitry directs these three relays to the appropriate process. With the setup parameters set to allow both processes, a prompt appears for you to select which process is to be used for MANUAL CONTROL. Press <+/-> to toggle between the **PLASMA** and **OXY/FUEL** selections. Press <ENTER> when the correct choice is shown.

NOTE: Once the plasma or oxygen/fuel choice is made, only the MANUAL CONTROL functions for that selection are available. To switch to the other process, you must press <RECYCLE> to cancel the current operation, and re-select the MANUAL CONTROL function again; this time choose the other cutting process.

If only one cutting process is used on the machine, the setup parameters should have been set so that the selection of **PLASMA** or **OXY/FUEL** is made automatically. In this case, the prompt for OXY/FUEL or PLASMA is not displayed.

Once you choose either oxygen/fuel or plasma, the readout displays **MANUAL CONTROL** and then **** SELECT ****. Then the menu of available MANUAL CONTROL functions for the selected cutting process is displayed. Use the UP and DOWN scroll arrow keys to scroll through the list. Press <ENTER> when the correct function is displayed.

OXYGEN/FUEL MANUAL CONTROL FUNCTIONS

For oxygen/fuel cutting, the following manual control functions are available:

- **OXY PRHT/CUT** High preheat, then start cutting oxygen
- **OXY ENABLE** Turn on CUTTING OXYGEN ENABLE relay only
- **OXY START** Turn on CUTTING OXYGEN START relay only
- **PREHEAT** Turn on HIGH PREHEAT relay only

OXY PRHT/CUT

This function is used for cutting scrap material or for stripping plates in a single axis. It controls both the PREHEAT and CUTTING OXYGEN functions.

When selected, the control prompts you to press <CYCLE START> to turn on the high preheat gasses. Once the high preheat has been turned on, you are then prompted to press <CYCLE START> again, to turn on the cutting oxygen. (High Preheat is turned off automatically.) Once the oxygen is turned on, the JOG keys on the panel can be used to move the machine to cut in the desired direction.

The display now prompts you to press <CYCLE STOP> to turn off the cutting oxygen and re-start the sequence. Once you press <CYCLE STOP>, you must press <CYCLE START> again to preheat and a second time for the cutting oxygen.

After all cutting is complete, or to change to a different MANUAL CONTROL mode, press either the UP or DOWN scroll arrow key. This returns to the menu of available MANUAL CONTROL functions and allows a different one to be selected.

OXY ENABLE

This function activates the CUTTING OXYGEN ENABLE relay, but does not start the actual cutting oxygen. Once the enable relay is turned on, the cutting oxygen switch on the machine panel can be used to start the oxygen, if desired. Normally, this function is used for testing the enable relay output only.

Once selected, the prompts indicate that you must press <CYCLE START> or <CYCLE STOP> to turn the OXYGEN ENABLE relay **ON** and **OFF**.

Press either the UP or DOWN scroll arrow keys to return to the menu of available MANUAL CONTROL functions.

OXY START

This function is used for testing the CUTTING OXYGEN START relay, and does not actually start the flow of cutting oxygen gas. (The enable relay described earlier is not turned on by this test.)

Once selected, the prompts indicate that you must use <CYCLE START> and <CYCLE STOP> to control the relay. Use the UP or DOWN scroll arrow keys to return to the menu of available MANUAL CONTROL functions.

PREHEAT

This function is used for testing the HIGH PREHEAT RELAY output only. Since this relay controls the high preheat gas directly, when it is turned on, the high preheat gas is turned on. Therefore, this mode could be used to check the high preheat gas pressures before cutting a part program. More commonly, this mode is used to check the relay output for testing purposes.

When selected, the prompts indicate that you must press <CYCLE START> and <CYCLE STOP> to control the relay. Press either the UP or DOWN scroll arrow keys to return to the menu of available MANUAL CONTROL functions.

PLASMA MANUAL CONTROL FUNCTIONS

For PLASMA cutting, the following manual control functions are available:

- **PLASMA CUT** Enable plasma, then start plasma cut
- **PLASMA JOG/CUT** JOG keys interlock with plasma cut
- **PLASMA ENABLE** Turn on PLASMA ENABLE relay only
- **PLASMA START** Turn on PLASMA START relay only
- **HEIGHT DISABLE** Set for PLASMA HEIGHT sensor disable

PLASMA CUT

This selection may be used to test fire the plasma torch, by cutting up scrap material or strip-cutting a plate.

Once selected, the control prompts you to press <CYCLE START> to enable the plasma torch. This does not cause the torch to fire; it activates the PLASMA ENABLE relay, which puts the plasma control circuitry in a state where it can be started by a separate start input.

On some machines, the PLASMA ENABLE causes the torch to be lowered to the plate. Once enabled, the display changes to prompt you to press <CYCLE START> to actually fire the plasma torch. Once the torch fires, use the JOG keys move the machine to cut the desired pattern. Note that the machine does not move automatically once the torch fires; you must use the JOG controls.

Since it is sometimes difficult to coordinate the JOG function with the torch firing, a second cutting mode provides a better interlock between the torch and the JOG controls. See PLASMA CUT/JOG .

To turn the plasma torch off, press <CYCLE STOP>. To return to the MANUAL CONTROL menu, press either the UP or DOWN scroll arrow key.

PLASMA CUT/JOG

This mode also provides a way to turn on the plasma torch for cutting up scrap material or stripping the plate. The first selection (**PLASMA CUT**) has the plasma controls and JOG controls operating independently. While this may work for some thicker plate applications, thin plate requires that the machine begin moving as soon as the arc fires, otherwise the torch goes out.

The **PLASMA CUT/JOG** function interlocks the JOG controls with the plasma firing as follows:

Once the selection is made, the control prompts you to press <CYCLE START> to enable the plasma torch. This does not fire the torch; it only sets the electronics in a condition where they can be started from a separate start input. On some machines, the PLASMA ENABLE causes the torch to be lowered to the plate. Once enabled, the display changes to **HOLD JOG KEY TO FIRE PLASMA**.

You must press and hold one of the JOG DIRECTION keys for the desired jog direction. As soon as the JOG DIRECTION key is pressed, the plasma system is started. Since the plasma system goes through a purge cycle, you must continue to hold the JOG DIRECTION key until the arc fires. The machine does not move during this time. Once the arc fires, the machine immediately begins moving in the selected jog direction, at the speed set by the feedrate.

To stop the plasma cut, just release the JOG DIRECTION key. Once the machine has stopped, the plasma torch is automatically turned off, and the entire sequence must be repeated. While the torch is cutting, you can change the direction of cut by simply releasing the current JOG DIRECTION key, and pressing a new one. The new direction key must be pressed before the machine decelerates to a stop; otherwise the torch is turned off as described above.

There is no need to press <CYCLE STOP>, since releasing the JOG direction key automatically stops the plasma. Press the UP or DOWN scroll arrow key to return to the MANUAL CONTROL menu to make a new selection.

PLASMA ENABLE

This function is used to test the PLASMA ENABLE relay output. Once selected, press either <CYCLE START> or <CYCLE STOP> to toggle the relay output. Press either the UP or DOWN scroll arrow keys to return to the MANUAL CONTROL menu.

PLASMA START

This function is used to test the PLASMA START relay output. Once selected, press either <CYCLE START> or <CYCLE STOP> to toggle the relay output. Press either the UP or DOWN scroll arrow keys to return to the MANUAL CONTROL menu.

HEIGHT DISABLE

This function is used to test the PLASMA HEIGHT SENSOR DISABLE relay output. Once selected, press either <CYCLE START> or <CYCLE STOP> to toggle the relay output.

The relay is initially **OFF**, which allows the plasma height sensor to operate. Press <CYCLE START> to set the relay to **ON**, which inhibits the plasma height sensor raising or lowering the torch. This relay is used when a part program is actually being cut to prevent the torch from diving into the plate when the machine slows to go around a corner. The height sensor is disabled until the machine has re-accelerated back to cutting speed.

Press either the UP or DOWN scroll arrow key to return to the MANUAL CONTROL menu.

MARKER TEST

If the PLATE MARKING option is enabled on the **1250**, this prompt is displayed after the PREHEAT MANUAL control function. It is used to manually turn on the plate marking device for testing.

FNC15-GO HOME

The **1250** has the ability to return to one of four different home positions in the operating area of the machine. You must define the Table #1 (0,0) home position using the **FNC-16 SET HOME** function after a power failure, or after the **1250** has lost power for any reason. Once defined, it is remembered regardless of what other operation is performed on the machine. Parts can be cut at any location on the table, programs can be downloaded, and kerfed, etc., without affecting the location of the Table #1 home position. Only a power failure causes this location to be lost, and requires the **FNC-16 SET HOME** function to be re-set.

In addition to the Table #1 home position, there are three additional TABLE HOME positions that are defined as offsets from the reference home position (Table #1). These TABLE HOME offsets are entered as setup parameters SD74 - SD79. (See the INSTALLATION AND SETUP section of this manual.)

TABLE #2 HOME OFFSET, TABLE #3 HOME OFFSET, and TABLE #4 HOME OFFSET parameters define a home position on each of possible cutting tables. This feature is particularly useful for operations where the material is pre-cut to fixed sizes and is always located at the same place on the cutting tables. By defining these fixed table home positions, the torch can accurately be positioned on each table. Once a table **GO HOME** function is performed, the home position on that table is considered the (0,0) position for all subsequent operations. The machine (0,0) is not affected.

GO HOME MENU

When you select **FNC-15 GO HOME**, the display changes to **GO TO HOME- 1**. The following are the choices for the **GO HOME** function:

GO TO TABLE HOME- 1	Causes the machine to return to the (0,0) position on the machine. This position is the point from which all other table home positions are measured.

GO TO TABLE HOME- 2	Causes the machine to move to Table #2 (0,0), which is defined as an offset from Table #1 (0,0) position by parameters SD74 and SD75.
GO TO TABLE HOME- 3	Causes the machine to move to Table #3 (0,0), which is defined as an offset from Table #1 (0,0) position by parameters SD76 and SD77.
GO TO TABLE HOME- 4	Causes the machine to move to Table #4 (0,0), which is defined as an offset from Table #1 (0,0) position by parameters SD78 and SD79.

Press either the UP or DOWN scroll arrow key to scroll through the list, or enter the digit directly. Once the correct number is displayed, press <ENTER>. The display changes to **PUSH- CYCLE START**.

The machine does not move until you press <CYCLE START>. When you do, the machine begins moving to the selected home position, and the readout shows the X/Y distance to the final location. When it is reached, the readout shows 0,0.

GO TO TABLE HOME FROM PART PROGRAMS

There are several commands and functions in the **1250** that allow the table homes to be accessed automatically through the part program.

The following codes in Word Address and ESSI allow the part program to command the machine to go to a particular home position:

	WADR1	WADR2	ESSI
Go to Table 1 home:	M79T1	M79T1	79+1
Go to Table 2 home:	M79T2	M79T2	79+2
Go to Table 3 home:	M79T3	M79T3	79+3
Go to Table 4 home:	M79T4	M79T4	79+4

These codes can be used at any point in a non-cutting portion of a part program to relocate the machine to a different table's home position. Also, one of the home locations can be designated as a PARK location, so you can unload the cut parts and load new material.

You also have the ability to override the programmed home command so that if the machine is sent to Table 2, but the material is on Table 1, you can return the machine to Table 1. To override the programmed home command, press the <AUXILIARY> function key (blank area to the left of the <DSPY> key). Normally, there are several selections from this button. While a part is cutting, however, its only function is to override the home positions. When you press this area while a part is being cut, the readout displays **GO TO HOME- X** . Then press either the UP or DOWN scroll arrow key to scroll through a list, or enter the number directly of the desired table home. Then press <ENTER>. You are then prompted to **PUSH-CYCLE START**. When you press <CYCLE START>, the machine goes to the desired table home position. If the program had already been started on the wrong table, it will automatically restart after the home command so that the entire part is cut correctly at the new home position.

A variation to this home capability occurs when you press <PART RET.>. Normally, if this key is pressed three times, the control returns to the starting home position for the

entire program. Since there are now multiple home positions, the third press of the key returns to the most recent Table home position. Additional presses of this key have no affect. This was done to make it easy to restart a part at a particular table home position.

To recycle the entire part program and return to the original starting position, you must first return to the local TABLE HOME position as described above, and press <SHF><PART RET.>. Note that this two-key combination is only needed if the part program contains table home commands.

FNC-16 SET HOME

As described in FNC-15 above, the **1250** remembers Table #1 (0,0) home position as long as the power to the unit remains **ON**. When a power failure occurs, or the unit is turned off (or reset by SERV98- SYS RESET), the Table #1 home position must be re-defined.

The **1250** has two methods of defining the Table #1 home position. One method is used on machines that have home limit switches installed. The other method is used on machines that have no home limit switches.

SETTING TABLE #1 HOME POSITION - Machines with home limit switches

For proper operation, SD62-SYS CONFG2 must be set for home switches. See the INSTALLATION AND SETUP section of this manual.

Select **FNC-16 SET HOME** to set the Table #1 home position. The readout displays **PRESS CYCLE START FOR HOME SEARCH**.

When you press <CYCLE START>, the **1250** begins a search for the home position. It first moves in a direction set up in SD62-CONFG2 to find the Y home switch at about 100 IPM. When the switch is found, it reverses direction and backs off the switch at 5 IPM. As soon as the switch input is removed, the **1250** begins to search for the Y index pulse from the encoder. Once the index pulse is found, it stops and repeats the same process for the X axis.

SETTING TABLE #1 HOME POSITION - Machines without home limit switches

Use this method if the machine does not have home indexing switches installed. So that this alignment can be as accurate as possible, some type of scribe mark, end stop, alignment pin, or other device should be installed on the machine so you can accurately move the X and Y axes to a fixed location using the JOG DIRECTION controls.

To set Table #1 home reference position, first jog the machine to the alignment position. Locate it as accurately as possible since this affects both the reference home position and Table home positions. Once the machine is located at the proper position, select the **FNC-16 SET HOME** special function. The readout displays **YES+ SET HOME -NO**. There are two verification prompts which must both be answered **YES** to set the home reference position. This is done to guard against accidentally changing the home location.

When this prompt is displayed, press the <+/-> key to cause the + or - indicator to flash. If you enter **NO** for either of the verification prompts, the home position is not changed, and the procedure aborts.

To set the home reference position, press <+/-> to make the + sign by the **YES**, and then press <ENTER>. The readout displays **NO- YOU SURE +YES**. Again, this second prompt must also be answered **+YES**. Press <+/-> to get the + sign flashing and press <ENTER>. This causes the current location of the machine to be defined as the Table #1 home position. The readout displays the current encoder position as **+0.00 +0.00**. Press <RECYCLE> to return to the main menu.

FLOPPY DRIVE OPERATION

NOTE: For proper operation of a externally mounted **1250** disk drive, software feature #5 must be enabled. The **1250** only loads programs with a preset file extension. The file extension is set by SD53-FILE EXTEN. See the INSTALLATION AND SETUP section of this manual.

FLOPPY DISK DRIVES

The **1250** floppy disk drive is able to load and store part programs to a 3-1/2 inch 720K or 1.4 meg floppy disk. The floppy drive is treated as a serial device. This gives you greater flexibility to use available features, such as the AUXILIARY CODE TABLE, DECIMAL SHIFT and AXIS SWAP. Programs that are loaded from and stored to the floppy disk are treated the same as they would be if loaded or stored through the serial port.

The **1250** external floppy disk drive is available in two configurations:

1. **1250** portable floppy disk drive, which allows loading and storing of programs from the **1250**.
2. **1250** portable floppy disk drive with keypad and LCD display. This version allows loading and storing programs from the **1250**. It also has a keypad and LCD display, which allows for manual operation of the unit. The manual operation allows the flexibility to use the unit with other controls that support RS-232 serial communications.

The **1250** floppy disk drive is 100% compatible with the MS-DOS and PC-DOS floppy disk format. Files may be copied to and from the **1250** by using the DOS **copy** command.

NOTE: The **1250** floppy disk drives are only compatible with the United States versions of MS-DOS and PC-DOS operating systems.

FLOPPY UTILITIES DISK

The **FLOPPY UTILITIES & TEST PROGRAMS** disk that is shipped with each **1250** floppy disk drive contains a file that is used to configure the systems for the **1250**. The name of this file is EASIDSK.SYS. Normally the drive only needs to be configured once and this is done at the factory.

If the drive needs to be configured again, place the FLOPPY UTILITIES & TEST PROGRAMS disk in the drive with the power off. When power is turned on to the **1250**, the disk drive reads the file EASIDSK.SYS and automatically configures the ports, baud rate, parity, data bits, stop bits, and a number of other parameters to the correct settings. Once the system is configured, the parameters are saved in non-volatile memory.

SERIAL CONNECTION

The **1250** floppy disk drive system port is configured at the factory as follows: COM1:4800 baud, even parity, 7 data bits, 1 stop bit, CTS/RTS disabled, and XON/XOFF enabled.

A three-wire RS-232 serial cable is required for connection between the **1250** and the external floppy disk drive. The connection is as follows.

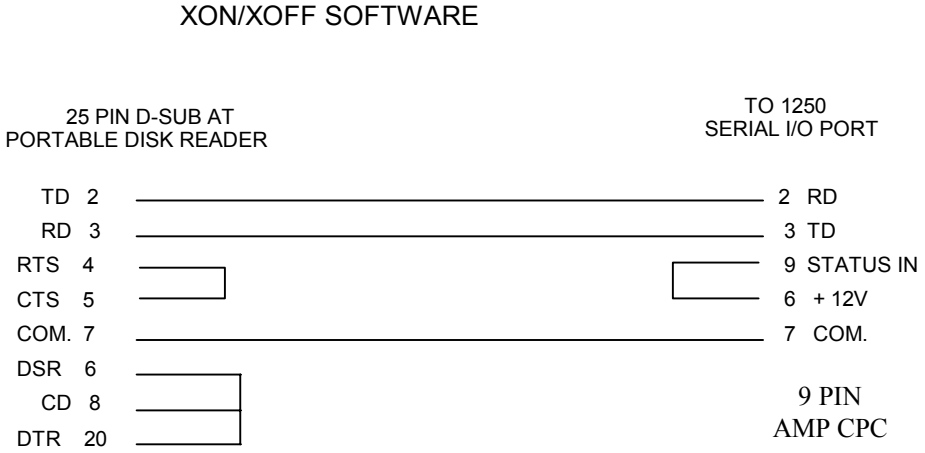

LOADING FILES FROM THE FLOPPY

To load a file from a **1250** portable floppy disk drive, press the <+/-> key, which selects **LOAD FROM FLOPPY**, and then press <ENTER>. The **1250** prompts you for a numeric program number (eight digits maximum). Enter the desired program number that resides on the floppy disk. Then press <ENTER>. The **1250** displays **INSERT DISK -- PRESS ENTER- TO CONTINUE**.

Insert a formatted 3.5 inch floppy disk into the drive and close the door of the floppy drive. Press <ENTER> to continue.

At this point, the **1250** does one of two things. If the second digit of SD50-SERIAL DEFINITION (the programming language select digit) is set to **0**, prompting for the program type occurs. If the second digit of SD50-SERIAL DEFINITION is preset to some other value, the control begins the process of loading from the floppy disk. A red LED indicator light on the disk drive begins to flash, indicating there is disk activity. When the transfer is complete, the **1250** readout displays **LOADING COMPLETE**.

If the selected program number exists on the disk, the **1250** displays **LOADING - 0** and begins to load the program. If the selected program does not exist on the disk, the **1250** displays **READ TIMEOUT**, indicating that the file does not exist.

NOTE: Valid program numbers consist of up to eight numeric digits with no leading zeros allowed. All programs must reside in the root directory of the floppy disk. The **1250** loads and stores programs with a file extension that is preset by the SD53-FILE EXTEN variable. See the INSTALLATION AND SETUP section of this manual for information on setting this variable.

SAVING FILES TO FLOPPY DISK

To store a file to a **1250** portable floppy disk drive, press the <.> (decimal point) key, which selects the **STORE TO FLOPPY** function, and then press <ENTER>. The **1250** prompts you for a numeric program number (eight digits maximum). Enter the desired program number to be stored on the floppy disk, then press <ENTER>. The **1250** readout displays **INSERT DISK -- PRESS ENTER- -TO CONTINUE**.

Insert a formatted 3.5 inch floppy disk into the drive and close the door. Press <ENTER> to continue.

At this point, the **1250** does one of two things. If the second digit of SD50- SERIAL DEFINITION (the programming language select digit) is set to **0**, prompting for the program type occurs. If the second digit of SD50- SERIAL DEFINITION is preset to some other value, the program begins the process of storing to the floppy disk. A LED indicator light on the disk drive begins to flash, indicating there is disk activity. When the transfer is complete, the **1250** readout displays **STORING COMPLETE**.

BLANK

PROGRAMMING THE NC CONTROL

The **1250** accepts the two major programming languages used for X/Y shape cutting machines, Word Address (per EIA RS-274 specification) and ESSI.

Additionally, several variations of each of these languages are available to be compatible with other existing equipment. The choices for program type are either selected during installation and setup, or can be selected when a particular operation is performed. These choices are:

PGM TYPE-1-**WADR**	Standard **1250** Word Address program
PGM TYPE-2-**ESSI**	Standard **1250** ESSI program
PGM TYPE-3-**INTL**	Used for internal test purposes only
PGM TYPE-4-**WADR1**	Word Address Program Type #1
PGM TYPE-5-**WADR2**	Word Address Program Type #2
PGM TYPE-6-**WADR3**	Special Word Address. Uses CUSTOM AUXILIARY CODE CONVERSION TABLE and AXIS SWAP.
PGM TYPE-7-**ESSI1**	Special ESSI. Uses CUSTOM AUXILIARY CODE CONVERSION TABLE and AXIS SWAP.

Normally, the first two formats, WADR and ESSI are used for programming the **1250**. WADR1 and WADR2 formats are basically the same as the standard WADR format, but with some re-assignment of the auxiliary codes as indicated further on in this section.

The two special formats, WADR3 and ESSI1 make use of several conversion features of the **1250** so that programs that have been prepared for a different control, or that use different auxiliary code definitions, can be directly loaded into the **1250** without requiring re-programming. These two formats allow for the following conversions:

Change axis sign definitions:	+X becomes -X
Allow axis interchange:	Permits X and Y axis to be swapped
Custom Aux Code Conversion:	Allows re-defining of all M, G, and ESSI auxiliary codes to match incoming program. It also allows for special end-of-program codes and forced auxiliary M code priority

Unless there is a specific reason for using these special formats, they should not be used since there are several parameters and data tables which must be set up for these to work correctly. If these conversions are needed, the specific setup steps are covered in the INSTALLATION AND SETUP section, under the topics **SD51- PRGM FORMAT** and **SD70- CUSTOM AUX**.

The following two sections describe standard Word Address and ESSI programming. For simplicity, only incremental programming is described in these sections although the **1250** is capable of both incremental and absolute programming. The following sections

are meant as a reference for the programming formats used by the **1250** and not a training course in part programming. Therefore, it is assumed that you are somewhat familiar with part programming techniques and procedures.

When standard Word Address and ESSI formats are used, the following axis definitions apply:

- The **X** axis is defined as the main rail axis with +X as the direction away from the operator and -X toward the operator.
- The **Y** axis is defined as the cross axis with +Y to the left and -Y to the right.

WORD ADDRESS PROGRAMMING LANGUAGE

WORD ADDRESS PROGRAMMING

Although there are four choices for Word Address programming, they are basically the same. The major difference is in the assignment of auxiliary function codes. These differences allow the **1250** to be compatible with other controls and programming systems. Some of the special formats could even be the same as the standard **1250** program type. In most cases, the standard format for the system should be used.

Word Address 3 (special program format) allows complete re-definition of the auxiliary code functions and axis definitions. This section deals with the standard Word Address, Word Address 1, and Word Address 2 program formats.

WORD ADDRESS DATA BLOCK SPECIFICATION

A Word Address data block is made up of ***key characters*** and ***values***. A key character is a letter that specifies a function, and the key characters that are supported in the **1250** are as per RS-274:

Inch systems:	**%, P8, G3, X+54, Y+54, I+54, J+54, M3, T4, K+24, F54, Q8**
Metric systems:	**%, P8, G3, X+63, Y+63, I+63, J+63, M3, T4, K+33, F63, Q8**

All key characters, except for **%**, require a numerical value directly after them. These values further described the key character to the **1250**.

IMPORTANT NOTE: As per RS-274, all programs must start with a data block containing only a **%** (percent sign).

KEY CHARACTER DESCRIPTIONS

Any Word Address key character that is not described here is ignored.

N - LINE NUMBER

The **N** key character is a line number and is used for documentation purposes only. It does not affect program execution, and therefore, the **1250** does not store these values. When the **1250** loads a program through serial I/O, these values are discarded to conserve memory space.

P - PROGRAM NUMBER

This is an optional key character that allows an eight-digit program number to be included in a program. If a program is loaded containing a program number, it is automatically loaded in memory as that number.

X - DIMENSION FOR LINES OR ARCS

In INCREMENTAL PROGRAMMING, this is the distance from the start point to the end point of a move along the X (rail) axis.

In ABSOLUTE PROGRAMMING, this is the distance from the zero point to the endpoint of the new move along the X (rail) axis.

The following are the maximum values that can be used for the **X** value:

+/-99,999.9999 inches

+/-999,999.999 millimeters

NOTE: **X** values that exceed these limits produce a **PGM SYNTAX ERR** (program syntax error) when loaded through the serial port.

Y - DIMENSION FOR LINES OR ARCS

In INCREMENTAL PROGRAMMING, this is the distance from the start point to the end point of a move along the Y (cross) axis.

In ABSOLUTE PROGRAMMING, this is the distance from the zero point to the endpoint of the new move along the Y (cross) axis.

The following are the maximum values that can be used for the **Y** value:

+/-99,999.9999 inches

+/-999,999.999 millimeters

NOTE: **Y** values that exceed these limits produce a **PGM SYNTAX ERR** (program syntax error) when loaded through the serial port.

I - DIMENSION FOR ARCS

The **I** key character is not used on lines.

In INCREMENTAL PROGRAMMING, this is the distance in the X (rail) axis from the start point to the center of an arc.

In ABSOLUTE PROGRAMMING, this key character is dependent on SD51- PRGM FORMAT. If the third digit of PRGM FORMAT is **0**, this dimension is the distance from the zero (home) position to center of arc along the X (rail) axis. If the third digit of PRGM FORMAT is **1**, this dimension is the incremental distance from start point to center of the arc along the X axis. Consequently, the dimension is incremental even though absolute programming is being used.

The following are the maximum values that can be used for the **I** value:

+/-99,999.9999 inches

+/-999,999.999 millimeters

NOTE: **I** values that exceed these limits produce a **PGM SYNTAX ERR** (program syntax error) when loaded through the serial port.

J - DIMENSION-FOR ARCS

In INCREMENTAL PROGRAMMING, this is the distance in the Y (cross) axis from the start point to the center of an arc.

In ABSOLUTE PROGRAMMING, this value is dependent on SD51- PRGM FORMAT. If the third digit of PRGM FORMAT is **0**, this dimension is the distance from the zero (home) position to center of arc along the Y (cross) axis. If the third digit of PRGM FORMAT is **1**, this dimension is the incremental distance from start point to center of the arc along the Y axis. Consequently, the dimension is incremental even though absolute programming is being used.

The following are the maximum values that can be used for the **J** value:

+/-99,999.9999 inches

+/-999,999.999 millimeters

NOTE: **J** values that exceed these limits produce a **PGM SYNTAX ERR** (program syntax error) when loaded through the serial port.

SPECIAL NOTE ON PROGRAMMING ARCS

The **1250** attempts to cut exactly what it is programmed to cut. When programming arc blocks, the distance from the starting point of the arc to the center should equal the distance from the end point to the center. If the values are not equal, the **1250** uses the end point to center distance when cutting the part. The difference is a path error. As this path error increases, an undesirable cut path and machine motion occurs. The machine motion being a factor of setup parameters and machine speed.

If you press <BACK UP> to go in reverse through a cut path with improperly programmed arc blocks, machine motion is affected, since machine motion is a factor of setup parameters and back up speed.

TIP: To prevent the possibility of a program containing a improperly programmed arc block from making unwanted cuts, use TEST RUN before cutting the part.

G - PREPARATORY FUNCTIONS

Code	Function Retained (Note 1)	Single Block (Note 2)	Function
G02	A		Circular interpolation clockwise
G03	A		Circular interpolation counter-clockwise
G04		X	Dwell
G40	B		Kerf compensation cancel
G41	B		Kerf compensation left
G42	B		Kerf compensation right
G45		X	Lead-in to kerf-compensated part
G46	E		Selects which overlay parameter should be used. Example: G46 T1, where T can be 0, 1, 2, 3, or 4
G70	C		Inch programming
G71	C		Metric programming
G90	D		Absolute programming
G91	D		Incremental programming
G92	D		Absolute register pre-load
G97		X	Sets program repeat pointer. G97 can be followed by a T value to generate a loop program.
G98		X	Initiates program repeat at G97
G103		X	Auto erase and load

NOTE 1: Function is retained until canceled or superseded by another command in the same letter group (A, B, C, or D).

NOTE 2: Function affects only the block in which it appears.

M - MACHINE AUXILIARY FUNCTIONS

The supported **M** function definitions vary depending on the program format specified as illustrated in the following table. In most cases, the first column is the standard auxiliary code definitions for the **1250**.

Std WADR Code	Special WADR1 Code	Special WADR2 Code	With Block	After Block	Description
M00	M00	M00		X	Program stop
M02	M02	M02		X	End of program
M03	M03	M05		X	Cut process off
M20	M20	M21		X	Cut process off
M04	M04	M03	X		Cut process on
M21	M21	M20	X		Cut process on
M14	M14	M50	X		Height sensor disable
M15	M15	M51	X		Height sensor enable
M30	M30	M30		X	End of program (rewind)
M70	M70	M70		X	Marker offset #1 off
M71	M71	M71	X		Marker offset #1 on Example: M71 T1 where T can be 1, 2, 3, 4, 5, 6, 7, or 8
					Offset #2 off
M72	M72	M07		X	Offset #2 on
M73	M73	M06	X		
M79	M79	M79	X		Go to Table Home indicated by T value. Example: M79 T2, Go to Table #2 (0,0) home position.

F - DWELL TIME

The **G04** command, along with the **F** key character and a numeric value immediately following it, sets the time that a dwell occurs. This dwell time is in effect for that block and all subsequent **G04** blocks until a new **F** (dwell time) is included in another **G04** block. Time is in seconds.

For example:

N12 G04 F22.5 Block #12, Dwell for 22.5 seconds

The maximum value for the **F** key character when describing a dwell time is 999.99 seconds.

F - FEEDRATE

When no **G04** precedes the **F** value, the **F** key character, immediately followed by a numeric value, is used for programmable feedrate. The feedrate value must be in a block by itself.

For example:

N12 F100 Block #12, Feedrate of 100 IPM (or MMPM)

NOTE: The PROGRAMMABLE FEEDRATE option must be enabled for proper operation.

G CODE DESCRIPTIONS

G02, G03 These two functions are used to define the direction for arc data blocks as either clockwise or counter-clockwise respectively. Once either of these functions is used, all subsequent arcs are in the same direction until the opposite code is used.

G04 This code causes a SYSTEM DWELL to be performed. During this time, the machine is held in position and all control outputs remain in their current condition. The default dwell time is established during the setup and installation procedure.

This time is used for all **G04** blocks until an **F** key character is included in the same block as the **G04**. In this case, the value contained by the **F** key character is used as the dwell time for this and all subsequent **G04** blocks until changed by a new **G04** block containing a different **F** time.

G40, G41, G42 These three commands are used by the DIAL-IN-KERF routine to compensate the cutting path for the amount of material removed by the cutting process. The kerf directions (**G41** for left, or **G42** for right) are based on which way the centerline of the torch needs to be offset as it travels along the cutting path. **G40** cancels the kerf. It is not needed in the program, however, since the kerf is automatically turned off when not cutting.

NOTE: When a part program contains either KERF LEFT or KERF RIGHT auxiliary function codes, the software assumes that the DIAL-IN-KERF feature is used to run the part. When the kerf is added to the part program, it requires approximately 25% more memory to store the kerf data along with the part dimensions. Therefore, when the incoming program is stored, this extra 25% of memory is automatically allocated for each data block. This causes the kerf processing to run about 20% faster, since the space is already available to store the results. If the DIAL-IN-KERF feature is not used, or if the part program already has the kerf added to the dimensions, the KERF LEFT or KERF RIGHT codes can be removed from the part program before it is loaded. This uses less memory to store the part since no kerf space is added.

G45 The **G45** function may be included along with the arc or line dimensions performing the lead-in to the part. Including a **G45** in the data block allows the data to be altered to correctly lead into the kerf-compensated part.

G46 The **G46** function selects which overlay parameter table is used for the part program. This code, followed by the table number (for example, **G46 T1**), loads an overlay table (Table #1) into the running parameters and uses those parameters for running the part.

G70 Indicates that all subsequent part dimensions are in inch units.

G71 Indicates that all subsequent part dimensions are in metric (millimeter) units.

G90 Signals that all subsequent dimensions are in absolute programming format. **NOTE**: Although the X/Y dimensions are in absolute, the I/J dimensions can be either absolute or incremental depending on the setting of SD51 - PRGM FORMAT.

G91 Signals that all subsequent dimensions are in incremental programming format.

G92 Only used in absolute programming mode. When included in a data block containing only X/Y dimensions, it causes the internal absolute registers to be set to the X/Y dimensions from the data block. No machine motion occurs. This code is useful for resetting the absolute zero position at various points in a part program to make the X/Y dimensioning of the subsequent data blocks easier.

G97 Sets program repeat pointer.

G98 Causes a jump to the **G97** pointer.

The **G97** and **G98** commands are used as a pair within a part program to perform an overall program repeat function, and also to allow loop programming within a part program.

An overall program repeat function is implemented by programming the **G97** to set the repeat pointer location. This is normally very close to the start of the program. Any commands before the **G97** will only be performed the first time through the part and will be skipped on each repeat pass. This is sometimes used to allow the program to start at the corner of the plate and move to the first pierce point. Then the **G97** is programmed so that the move from the corner isn't repeated on each repeat of the part. When the program repeats, it only executes the commands after the G97.

To set the overall repeat pointer, a **G97** must be located in a data block by itself. No other information should be included in this data block. If the **G97** is omitted from the program, the repeat pointer is automatically set to the first data block.

For the overall repeat function to cause the automatic repeat of the part program, a **G98** must be programmed at the end of the program. When this code is read, it causes the program to jump back to the point where the **G97** was programmed and continues with the program from that point.

Note that the **G98** should be programmed in a data block by itself, and that no commands following the **G98** will be executed since the program will always jump back to the **G97** location. If a **G98** is programmed but there was no **G97** at the beginning, the program will repeat starting at the first data block.

A loop programming function allows portions of a part program to be repeated a specified number of times to reduce the size of the part program. For example, if 100 equally spaced holes need to be cut in a straight line, and four data blocks are required to cut each hole, standard programming would require 400 data blocks. By using loop programming, it requires only six data blocks. This is the most common use for this type of loop programming.

To program a loop, program a data block containing **G97 Txxxx** at the start of the portion of code to be repeated. The **xxxx** following the **T** key character specifies the number of times the loop is to be executed. If a value of **T1** is programmed, it is the same as not having the loop at all since the code would be done one time anyway.

The end of the loop is programmed by a data block containing only the **G98** code. This is the same code as is used for the overall program repeat, but since there was a **G97 Txxxx** data block already programmed, the first **G98** code following the **G97 Txxxx** data block acts as the end of the loop and not the overall program repeat. Any number of loops can be programmed in a single part however they cannot be nested. That is, the **G97 Txxxx** must be followed by a **G98**, and there cannot be a **G97 Txxxx** followed by another **G97 Txxxx** data block.

The use of loop programming does not prevent the use of the overall program repeat function. It is still allowed to have a **G97** alone in a data block at the beginning of the program to set the repeat pointer location, and a **G98** at the end of the program to cause the program repeat.

G103 When a LOAD/RUN operation is selected, **G103** causes an automatic delete of the current program and loads new program specified by **Q** word in same data block as **G103**. For example, **G103 Q12345678** causes the current program to be erased after it is done and automatically reload program **Q12345678**.

M CODE DESCRIPTIONS

M00	**Program Stop.** Causes machine operation to halt and all cutting functions to be turned off. Press <START CYCLE> to resume program execution.
M02	**Program End with no Rewind.** You must end a Word Address program with either **M02** or **M30**. If you are loading multiple programs, all but the last one should end with the **M02** code since it does not cause a rewind. This is also true if the parts are loaded through the serial port.
M30	**Program End with Rewind.** The last program to be loaded can use the **M30** command to stop the loading process and start the tape rewind.
M04, M21	**Cutting On.** Initiates the cutting start sequence for a selected cutting system. While the cut is on, the machine moves at the speed set by the <SPEED> key.
M03, M20	**Cutting Off.** Turns off the cutting process after performing any cut off sequencing. The machine moves at high traverse speed to next pierce location.
M14	**Height Sensor Disable.** Disables height sensor contact.
M15	**Height Sensor Enable.** Enables height sensor contact.
M70	**Offset #1 Off.** This function acts exactly opposite the **M71** command and has the same ability to either be used alone (to specify OFFSET #1) or be followed by a **T1** (through **T8**) to specify one of the eight offset pairs. When it is used, it causes the machine to offset in the negative direction from the programmed parameters. The OFFSET OFF command is normally used to cancel an OFFSET ON command, so that the machine is returned to the original position. Use the table for **M71** to determine the offset parameters referenced by this command. Where the table indicates **M71 T2** to set OFFSET #2 on, a **M70 T2** sets OFFSET #2 off.
M71	**Offset #1 On.** Causes the machine to offset from its current position, based on the values in the setup parameters described later. One use of this function is with a plate marking device. This command is used to offset the machine position so that the marking device is aligned where the cutting torch used to be. This allows the dimensions for the marking portion of the program to be programmed the same as the cutting moves, since the marker has been shifted into the same position that was previously occupied by the torch. After the marking moves are done, the corresponding OFFSET OFF command is used to shift the cutting torch back to the proper position, so that the program can continue with the torch at the programmed coordinates.

If **M71** is used alone in a data block, it causes the machine to offset based on the setup parameter values SD40 and SD41 (same as SD80 and SD81). This supports existing programs where the **M71** command is designated as the OFFSET #1 ON command.

Note that the following parameters specify the same offset dimensions. The lower numbers are retained for compatibility with older software.

SD40 -- Same as SD80 X Offset #1

SD41 -- Same as SD81 Y Offset #1

SD47 -- Same as SD82 X Offset #2

SD48 -- Same as SD83 Y Offset #2

There are a total of eight X/Y offset pairs supported by the **1250**. These are specified by parameters SD80 - SD95. To select one of these offsets, follow the **M71** by a **T** key character with a value of 1 to 8, which selects one of the eight offsets to be used. The following are the valid program uses:

Data block:	Offset dimension parameters:
M71	SD80, SD81 (same as SD40, SD41)
M71 T1	SD80, SD81 (same as SD40, SD41)
M71 T2	SD82, SD83 (same as SD47, SD48)
M71 T3	SD84, SD85
M71 T4	SD86, SD87
M71 T5	SD88, SD89
M71 T6	SD90, SD91
M71 T7	SD92, SD93
M71 T8	SD94, SD95

Note that the offsets do not have to cancel each other, and it is possible to offset more than once if necessary. To end up back at the original position, each OFFSET ON command must be canceled by its corresponding OFFSET OFF command. Also, the OFFSET OFF basically causes a negative OFFSET ON. This means that an OFFSET OFF can be used to shift in the opposite direction of the setup parameter values, and then the OFFSET ON command used to cancel the OFF move and return to the original position.

M72 **Offset #2 Off.** This command is maintained for compatibility with older software. It causes the machine to offset in the opposite direction of the dimensions specified in SD47 and SD48 (same as SD82 and SD83). It is used to cancel the offset caused by the **M73** command after the PLATE MARKER #2 portion of the program is complete. Note that this function could also be programmed by using **M70 T2** as described above.

M73	**Offset #2 On.** This command is maintained for compatibility with older software. It causes the machine to offset based on the dimensions specified in parameters SD47 and SD48 (same as SD82 and SD83). It is used to offset for PLATE MARKER #2. Once the PLATE MARKER #2 portion of the program is complete, the offset is canceled by using the OFFSET #2 OFF command.
M79	**Go to Table.** This command instructs the **1250** to move to the cutting table indicated by the **T** key character value that follows **M79**. For example: **M79 T3** commands to go to Table #3 (0,0) home position.

WORD ADDRESS SAMPLE PROGRAM

The following is a Word Address program for **SAMPLE PART #1**. (See the drawing at the end of this section.) The **REF** letters on the program listing refer to the circled reference points on the part drawing. After the program is a detailed description of each program line. The program is shown in both inch and metric units.

This example assumes that Overlay Table #2 is used for the cutting process selected.

	Inch Program	**Metric Program**	**Ref**	**Comments**
01	%	%		Start of program code
02	N2P12345678	N2P12345678		Program number
03	N5G46T2	N5G46 T2		Overlay Table #2
04	N3X4Y-6.8	N3X101.6Y-172.7	A	Move from corner
05	N4G97	N4G97		Program repeat pointer
06	N5M04	N5M04		Cut on
07	N6G45X.75Y.3	N6G45X19.1X7.6	B	Lead-in line
08	N7G41	N7G41		Set kerf left
09	N8GO3I-.75	N8GO3I-19.1	C	Cut CCW arc hole
10	N9X-.75Y.3	N9X-19.91X7.6	D	Lead-out
11	N10M03	N10M03		Turn off cut
12	N11X2Y-6.8	N11X50.L8Y-172.7	E	Move to outside
13	N12M04	N12M04	E	Turn cut on
14	N13G45X-.5Y.5	N13G45X-12.7Y12.7	F	Lead-in
15	N14X-1.5	N14X-38.1	G	Line
16	N15X-2I-1	N15X-50.8I-25.4	H	Arc (still CCW)
17	N16X-1.5	N16X-38.1	I	Line
18	N17Y4.5	N17Y114.3	J	Line
19	N18X1.5Y1.5	N18X38.1Y38.1	K	Line
20	N19X-1.5Y1.5	N19X-38.1Y38.1	L	Line
21	N20Y3.5	N20Y88.9	M	Line
22	N21G02X512.5J-2.5	N21GO2X127I63.5J-3.5	N	Arc CW
23	N22Y-11.5	N22Y-292.1	O	Line and lead-out
24	N23MO3	N23M03		Cut off
25	N24X6Y6.2	N24X152.4Y157.5	P	Move to next part
26	N25G98	N25G98		Repeat program
27	N26M30	N26M30		End of program

LINE 1	The first line of a Word Address program must contain only a **%** (percent sign). This serves as the program start indicator. Any characters before the **%** are ignored. If the **%** is not present or has other data in the same block, the program will not load correctly.
LINE 2	This line contains the optional program number **N** identifier. When the program is loaded, this number is compared to the requested program number to ensure that the correct program was loaded. If a program number is used in a program, it must appear in the second line, immediately after the **%**.
LINE 3	**G46 T2** is used to select overlay parameter table 2. Any data blocks after the **G46** code uses overlay parameter table number 2 until another **G46 T#** is given.
LINE 4	Initial move from corner of plate to pierce point on first part. Due to the placement of the **G97** code, this block is not repeated on subsequent parts.
LINE 5	The **G97** pointer is used to indicate where the program repeat should occur. Any data blocks before the **G97** code are not repeated on subsequent parts.
LINE 6	Initiate the cutting process. Cutting speed is set by the <SPEED> key or digital feedrate.
LINE 7	This line leads in from the pierce location to the actual part.
LINE 8	Sets the kerf compensation to the left of the cut. This command causes the DIAL-IN-KERF feature to offset the cutting path to the left and produce the correct size part.
LINE 9	Sets the arc direction counter-clockwise to cut a 360 degree arc.
LINE 10	This line leads out away from the part before the cutting process is turned off. If any melting occurs when the cutting process is stopped, it occurs in the scrap, away from the part.
LINE 11	Turn off the cutting process.
LINE 12	Move to next pierce point at high traverse speed.
LINE 13	Initiate cutting process for outside cut.
LINE 14	Line leads in from pierce location to part.
LINE 15	Standard line format.
LINE 16	Arc format. Direction is still counter-clockwise from previous **G03** command.
LINE 17	Standard line format.
LINE 18	Standard line format.
LINE 19	Standard line format.
LINE 20	Standard line format.
LINE 21	Standard line format.
LINE 22	Standard arc format. The direction changed to clockwise by **G02** command.

LINE 23	Standard line format. Note that the line is .5 inches longer than part. This allows the line to also function as a lead out, away from the part before turning off the cutting process.
LINE 24	Turn off the cutting process.
LINE 25	Move to first pierce location on next part.
LINE 26	**G98** command causes program to repeat from point where **G97** command was used.
LINE 27	End-of-program command.

PART DRAWING: Sample Program 1

(Inch / millimeter dimensions)

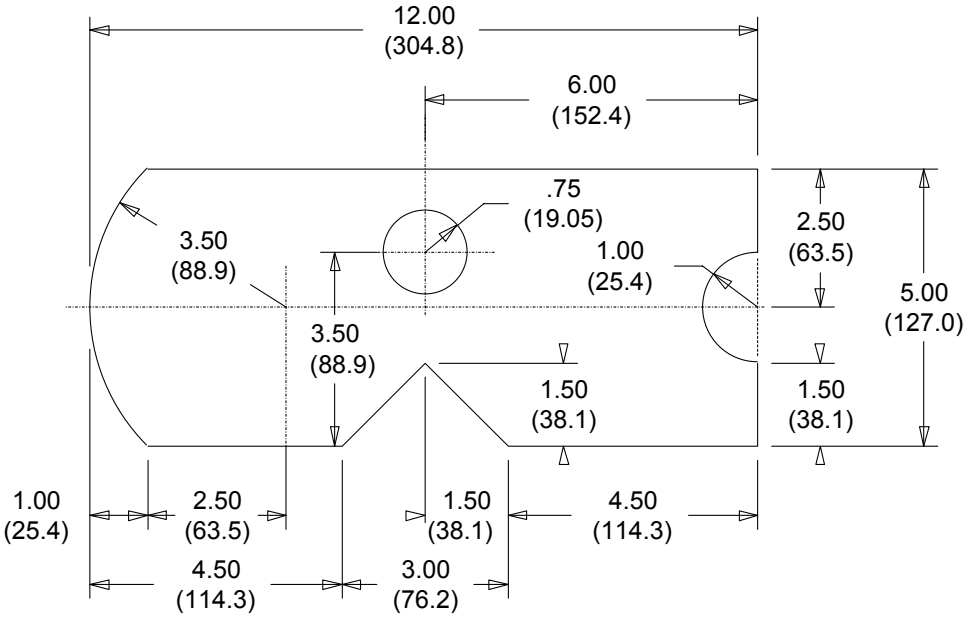

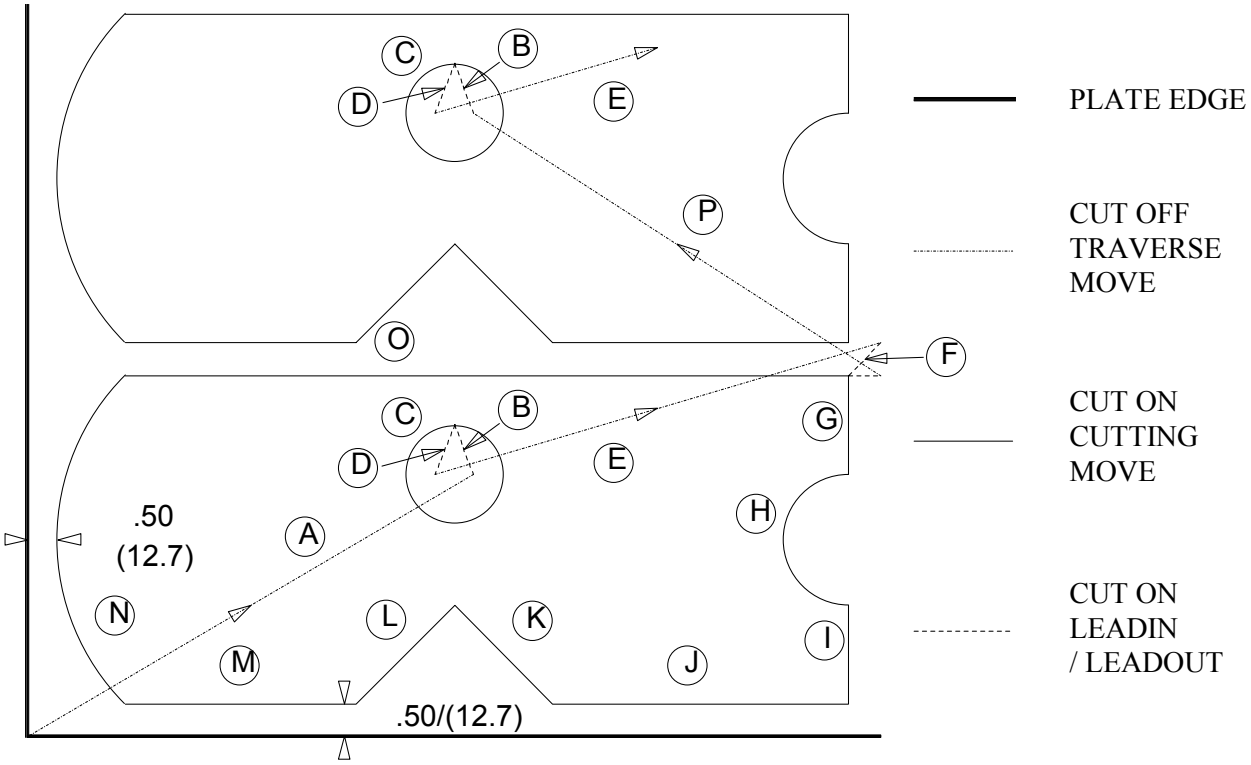

ESSI PROGRAMMING

ESSI PROGRAMMING

ESSI part programming uses three types of data blocks for the program. These are LINE MOVES, ARC MOVES, and AUXILIARY FUNCTION CODES.

LINE AND ARC MOVES

Both the line and arc data blocks are made up of a series of signed (+/-) dimensions. In ESSI programming, the number of signs in a data block determines whether it is an arc or a line. The dimensions for the block do not contain any decimal points, rather the number of decimal places are defined as follows:

For INCH programming, two decimal places are assumed. For example:

+200	equals a dimension of +2.00 inches
+5	equals a dimension of +0.05 inches
+9999999	maximum dimension is +/-999999.99 inches

For METRIC programming, one decimal place is assumed. For example:

+200	equals a dimension of +20.0 millimeters
+5	equals a dimension of +0.5 millimeters
+9999999	maximum dimension is +/-999999.9 millimeters

Line and arc data blocks are defined as follows:

- Blocks with two signs (either + or -), are LINE functions. The first signed value is the X incremental distance and the second signed value is the Y incremental distance. If one of the dimensions is 0, only a + sign need appear in the block. For example:

Line of 1 inch in the X axis and -.5 inches in the Y axis is programmed as:	Line of -2.5 inches in the Y axis with no movement in the X axis is programmed as:
+100-50	+-250

- Blocks with five signs are ARC functions. For example: +X+Y+XC+YC+ The first signed dimension is the incremental distance from the start point to the end point of the ARC along the X axis.
- The second signed dimension is the incremental distance from the start point to the end point of the ARC along the Y axis.

- The third signed dimension is the incremental distance from the start point to the center of the ARC along the X axis.
- The fourth signed dimension is the incremental distance from the start point to the center of the ARC along the Y axis.
- The fifth sign in the data block determines the direction of the ARC. + indicates a counter-clockwise arc, and - indicates a clockwise arc.

See the ESSI sample part for examples of arc programming.

The following maximum values that can be used for **X**, **Y**, **XC**, and **YC** values:

+/-99999.99 inches	ESSI value +/-9999999
+/-99999.9 mm	ESSI value +/-9999999

NOTE: Values that exceed these limits produce a **PGM SYNTAX ERR** (program syntax error.

SPECIAL NOTE ON PROGRAMMING ARCS

The **1250** attempts to cut exactly what it is programmed to cut. When programming arc blocks, the distance from the start point of the arc to the center should equal the distance from the end point to the center. If the values are not equal, the **1250** uses the end point to center distance when cutting the part. The difference is a path error. As this path error increases, an undesirable cut path and machine motion occurs. The machine motion being a factor of setup parameters and machine speed.

If you press <BACK UP> to go in reverse through a cut path with improperly programmed arc blocks, machine motion is affected, since machine motion is a factor of setup parameters and back up speed.

TIP: To prevent the possibility of a program containing an improperly programmed arc block from making unwanted cuts, use TEST RUN before cutting the part.

ESSI AUXILIARY FUNCTIONS

The third type of ESSI data block is used for the various auxiliary functions for the part program. The following is a list of the supported ESSI auxiliary function codes.

00	**Program Stop.** Causes machine operation to halt and all cutting functions to be turned off. Press <CYCLE START> to resume operation.
03, 04	The **1250** ignores all data between these two codes. Usually they are used for comments and instructions, which only appear on the program printout.
07	**Cutting On.** Initiates the start sequence for selected cutting system. While the cut is on, the machine moves at the speed set by the <SPEED> key.

08 **Cutting Off.** Turns off cutting process. After performing any cut off sequencing, the machine moves at high traverse speed to next pierce location.

11 **Plate Marker #1 Offset On.** Causes the machine to move by the distances entered for the MARKER #1 X/Y OFFSET dimension during the SETUP AND INSTALLATION procedure. The part program does not have to compensate for the physical offset between the marker and torch. Optionally followed by a +1 to +8 causing offsets 1-8 as specified by SD80-96 to be used. See INSTALLATION & SETUP: SD80-96 OFFSETS.

12 **Plate Marker #1 Offset Off.** Cancels the offset and moves the cutting torch back to the programmed position. Optionally followed by a +1 to +8 causing offsets 1-8 as specified by SD80-96 to be used. See INSTALLATION & SETUP: SD80-96 OFFSETS

29, 30, 38 These three commands are used by the DIAL-IN-KERF routine to compensate the cutting path for the amount of material removed by the cutting process. The kerf directions (**29** for left and **30** for right) are based on which way the centerline of the torch needs to be offset as it travels along the cutting path. The **38** code is provided to cancel the kerf. It is not needed in the program, however, since the kerf is automatically turned off when not cutting.

NOTE: See the description for Word Address codes **G41** and **G42** for details of the memory allocation for programs containing KERF LEFT or KERF RIGHT commands.

39 **Programmable Feedrate**. This command is followed by a numeric value in the same resolution. Example: 39+2500 is program feedrate of 25.00 IPM for inch units. In millimeter units, 39+2500 is program feedrate of 250 MMPM.

40 **Programmable Kerf.** This code, along with a value in either inches or millimeters, allows feedrate commands to be inserted directly into a program. Example: 40+200 in inches the programmable kerf is 2 inches. In millimeters the program kerf would be 20 millimeters.

41 **System Dwell.** This code causes a system dwell to be performed. During this time, the machine is held in position and all control outputs remain in their current condition. The dwell time is set during the installation of the control and can be changed by following ESSI code **40** with **+XXXX** where the dwell is specified in milliseconds. For example, **41+1000** is a one second dwell.

65 **Multiple Table Select**. This ESSI code, along with a number between 0 and 4, selects one of the five available overlay data parameter tables. For example, **65+3** selects overlay table #3.

67 **Plasma Height Sensor Enable**

68 **Plasma height Sensor Disable**

70 Indicates that all subsequent part dimensions are in inch units.

71	Indicates that all subsequent part dimensions are in metric (millimeter) units.
79	**Cutting Table Home Select**. This code, along with a value between 0 and 4, selects the corresponding table home position. For example, **79+2** causes the machine to move to Table #2 Home (0,0) position.
81	Indicates that all subsequent dimensions are in incremental program format.
82	Indicates that all subsequent dimensions are in absolute program format. See SD51- PRGM FORMAT in the INSTALLATION AND SETUP section for details regarding absolute and incremental formats for the X and Y center dimensions in absolute mode.
90	**Program End with No Rewind.** This code does not cause the tape to rewind at the end of the load process, and consequently allows multiple programs to be loaded. It stops the tape at the end of the first program, and then after the first program is stored, it starts loading the next one on the tape. If a rewind is desired, the last program in the list should end with the **99** code described below.
97, 98	These two functions are used as a pair within a part program to perform the program repeat function. **97** acts as a pointer in the program. When **98** is reached, the program jumps back to the point in the program where the **97** occurred. The program repeats to the beginning if the **97** code is not used. For example, **97+XX** where **XX** is the loop count, causes the program to repeat **XX** number of times.
64, 99	**End of Program with Rewind.** Either code may be used. When loading from paper tape, this code stops the loading process and causes the tape to be rewound back to the start. If the program is being downloaded from a remote RS-232 source, this code stops the loading process and terminates the link. If multiple programs are to be loaded, the **90** code described above should be used on all but the last one.
103	**Automatic Load/Run.** When a LOAD/RUN operation is selected, **103** causes an automatic delete of the current program and loads new program specified in the same data block as **103**. For example, **103 12345678** causes the current program to be erased after it is done, and automatically reload **12345678**.

ESSI SAMPLE PROGRAM

The following is an ESSI program for Sample Part #1. (See the drawing at the end of this section.) The **REF** letters in the program listing refer to the circled reference points on the part drawing. After the program is a detailed description of each program line. The program is shown in both inch and metric units.

#	Inch Program	Metric Program	Ref	Comments
01	+400-680	+1016-1727	A	Move from corner
02	97	97		Program repeat pointer
03	07	07		Cut on
04	08	08	B	Lead-out
05	29	29		Set kerf left
06	++-75++	++-191++	C	Cut counter-clockwise holes
07	-75+30	-191+76	D	Lead-out
08	08	08		Lead-out
09	+200-680	+508-1727	E	Move to outside
10	07	07		Cut on
11	-50+50	-127+127	F	Lead-in
12	-150+	-381+	G	Line
13	-200+0-100+0+0	-508+0-254+0+	H	Counter-clockwise arc
14	-150+	-381+	I	Line
15	++450	++1143	J	Line
16	+150+150	381+381	K	Line
17	-150+150	381+381	L	Line
18	++350	++889	M	Line
19	+500+0+250+-250-	+1270+0+635-635	N	Clockwise arc
20	+-1150	+-2921	O	Line and lead-out
21	08	08		Cut off
22	+400+620	+1016+1575	P	Move to next part
23	98	98		Repeat program
24	99	99		End of program

LINE 1	Initial move from corner of plate to pierce point on first part. Due to the placement of the **97** code, this block does not repeat on subsequent parts.
LINE 2	The **97** pointer is used to indicate where the program repeat should occur. Any data blocks before the **97** code do not repeat on subsequent parts.
LINE 3	Initiate the cutting process. The cutting speed set by the <SPEED> key.
LINE 4	This line leads in from the pierce location to the actual part.
LINE 5	Sets the kerf compensation to the left of the cut. This command causes the DIAL-IN-KERF feature to offset the cutting path to the left and thus produce the correct size part.
LINE 6	Standard arc format. The arc direction is counter-clockwise, since the fifth sign is +. Note: zero dimensions (+0) are included for clarity. Only the sign of the dimension is actually needed for the part. This block cuts a 360 degree arc.
LINE 7	This line leads out from the part before the cutting process is turned off. If any melting occurs when the cutting process is stopped, it occurs in the scrap, away from the part.
LINE 8	Turn off the cutting process.
LINE 9	Move to next pierce point at high traverse speed.
LINE 10	Initiate cutting process for outside cut.
LINE 11	Line leads in from the pierce location to part.
LINE 12	Standard line format.
LINE 13	Standard arc format. The direction is counter-clockwise, since the fifth sign is +. Note: zero dimensions (+0) are included for clarity. Only the sign is actually needed for the part program.
LINE 14	Standard line format.
LINE 15	Standard line format.
LINE 16	Standard line format.
LINE 17	Standard line format.
LINE 18	Standard line format.
LINE 19	Standard arc format. The direction is clockwise, since the fifth sign is -.
LINE 20	Standard line format. Note: The line is .5 inches longer than the part. This allows the line to also function as a lead out from the part before turning off the cutting process.
LINE 21	Turn off the cutting process.
LINE 22	Move to first pierce location on next part.
LINE 23	The **98** command causes program to repeat from the point where the **97** command was used.
LINE 24	End-of-program command.

Part Drawings - Sample Program 1

Inch / Millimeter Dimensions

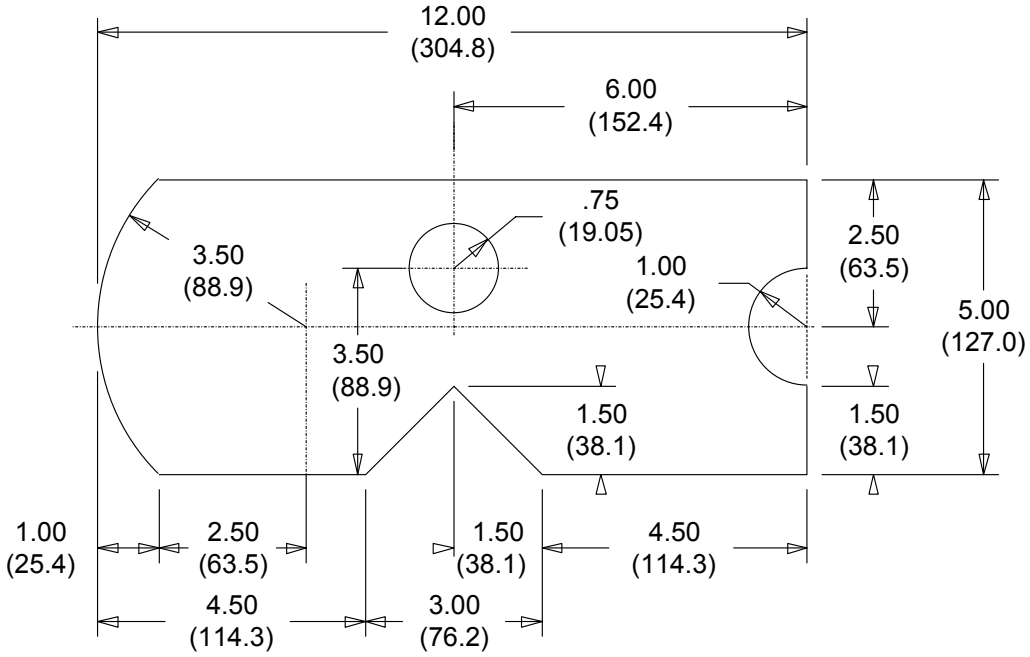

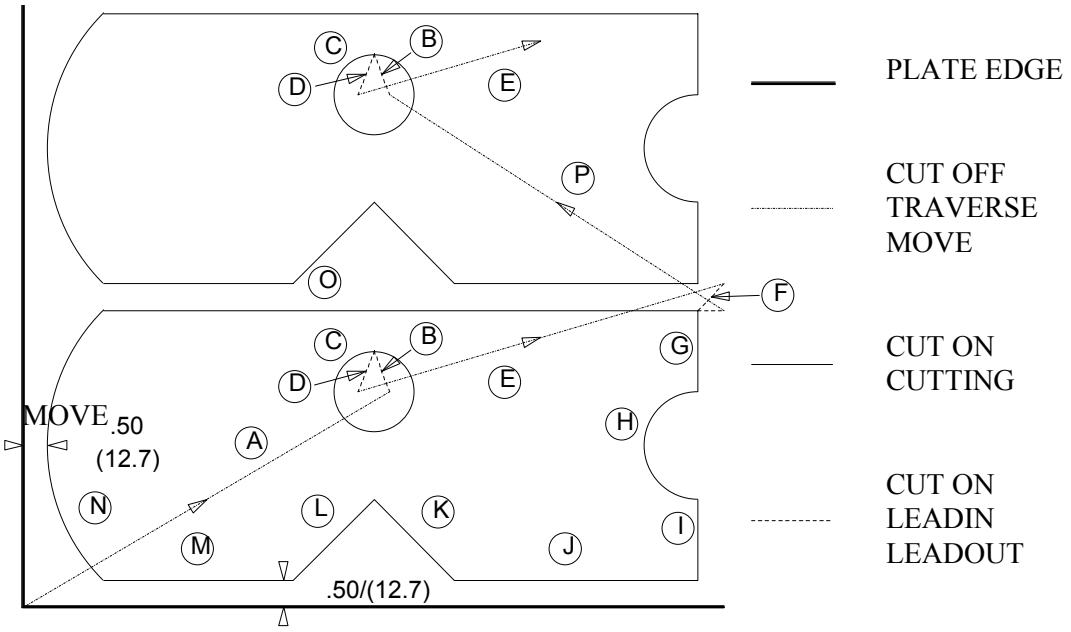

LETTERS IN CIRCLES DENOTE DATA BLOCK LETTERS IN EXAMPLE.

BLANK

SERIAL COMMUNICATIONS

Serial communications is a feature of the **1250** and must be enabled for operation. CAD-LINK (CLINK) and Communication Enhancement are special protocols used with this feature, and must also be enabled before they will operate.

To see if these features are enabled, use the DSPY 80 - CONFIGURE mode to display the system serial number, software version, and the amount of memory installed in the unit. Press <ENTER> to display a list of the available features. Either **ON** or **OFF** is displayed next to the feature name, indicating whether or not it is enabled in the unit. Press <ENTER> or use the UP and DOWN scroll arrow keys to scroll through the features to see if they are enabled.

For more information on DISPLAY 80, see the section on DISPLAY MODES.

If a particular feature is required, but not enabled, consult the factory.

SERIAL COMMUNICATIONS

Serial communications is the transferring of data between two devices over a communications link. For a communications link to operate properly, the characteristics of the transmitting and receiving devices must match. If they do not, the program will either not load at all, or will be interpreted incorrectly. The **1250** can adjust the following characteristics to match the external device.

- PROTOCOL — RTS/CTS, XON/XOFF and special devices
- PROGRAM TYPE — Word Address, ESSI, and specials
- CHARACTER TYPE — Number of data bits, parity
- BAUD RATE — 110 to 9600 (110 to 230K for 1250+)

The same factors affect both the receiving and transmitting characteristics of the system. Therefore, once they are set they should function in either direction.

These characteristics can be set for the system in one of two ways:

- Any or all of the characteristics can be permanently set into the unit by setting the appropriate value in the SD50 - SERIAL DEFN variable during the machine setup procedure (see INSTALLATION & SETUP). If a value is set using this method, it is automatically used any time a serial operation is performed. This would be the case if the same serial device is used all the time or if a permanent connection to a remote computer is installed. This requires the least input during operation, since the values are already set.
- A zero value may be entered for any or all of the four selections during the setup procedure. During operation, you are prompted for the particular characteristic each time a serial operation is performed. Each parameter can be set independently, allowing some to be entered each time while presetting others. This is useful if the same remote device were being used every time, but with programs using both ESSI and Word Address languages. Everything but the program type could be preset, requiring you to enter only the program type.

When you select **LOAD- FROM RS-232** or **STORE- TO RS-232**, the preset value is checked. If all four parameters are set, the system automatically goes on to the actual loading or storing procedure. However, if any or all of the parameters are set to **0**, the system prompts you for the required selections.

If the PROTOCOL parameter is set to **0**, you must select the desired protocol from the following menu:

PROTCL-1=RTS/CTS	Standard hardware protocol, using request to send and clear to send (RTS/CTS).
PROTCL-2=XON/XOFF	Standard software protocol, using XON and XOFF control characters.
PROTCL-3=BURNY 4	Special protocol used to communicate with BURNY 4 controls.
PROTCL-5=CASS 1	Not used.
PROTCL-5=PTAPE 1	Special protocol used to communicate with a spooling tape reader.
PROTCL-6=CLINK 1	Special protocol for communication with remote CAD programming center.

A detailed description of each of these protocols is provided in this section.

If the PROGRAM TYPE parameter is set to **0**, you must select the type of program to be loaded or stored from the following menu:

PGM TYPE-1=WADR	Standard **1250** Word Address program
PGM TYPE-2=ESSI	Standard **1250** ESSI program.
PGM TYPE-3=INTL	Test format; not for normal use.
PGM TYPE-4=WADR1	Special Word Address program, type 1.
PGM TYPE-5=WADR2	Special Word Address program, type 2.
PGM TYPE-6=WADR3	Special Word Address program, type 3.
PGM TYPE-7=ESSI1	Special ESSI program, type 1.

Specifications for the various program types are found in the PART PROGRAMMING section of this manual.

If the CHARACTER FORMAT parameter is set to **0**, you must select the desired character format from the following menu:

CHAR TYPE-1	NP7D: ASCII, no parity, 7 data bits
CHAR TYPE-2	NP8D: ASCII, no parity, 8 data bits
CHAR TYPE-3	EP7D: ASCII, even parity, 7 data bits (standard)
CHAR TYPE-4	EP8D: ASCII, even parity, 8 data bits
CHAR TYPE-5	OP7D: ASCII, odd parity, 7 data bits
CHAR TYPE-6	OP8D: ASCII, odd parity, 8 data bits
CHAR TYPE-7	EIA: EIA, RS-244 odd parity format

NOTE: Two (2) stop bits are always sent, one (1) or two (2) may be received.

If the BAUD RATE parameter is set to **0**, you must select the baud rate for communications from the following menu:

FOR 1250		ADD FOR 1250 PLUS	
BAUD RATE-1	110	**BAUD RATE-8**	19.2 K
BAUD RATE-2	300	**BAUD RATE-9**	28.8 K
BAUD RATE-3	600	**BAUD RATE-A**	38.4 K
BAUD RATE-4	1200	**BAUD RATE-B**	57.6 K
BAUD RATE-5	2400	**BAUD RATE-C**	115.2 K
BAUD RATE-6	4800	**BAUD RATE-D**	230 K
BAUD RATE-7	9600		

Once all the parameters are set, the **1250** initiates the transmission by setting its output status line to the active condition and then waits for the external device to enable its port. A **** WAITING **** message is displayed until the external device comes on-line. The **1250** then delays for one second before beginning communications.

If you press <RECYCLE> before the operation is complete, the process is aborted and **RECYCLE ABORT** is displayed. Press <RECYCLE> again to return to the top menu selection.

During a **LOAD** or **STORE** operation, the display shows the actual number of bytes being used to store the data.

XXXXXXXX LOADED is displayed when a LOAD operation is successfully completed. Press <RECYCLE> to return to the main prompting menu.

If the serial device being used disables its status line during the communication, the display changes to **WAITING** until the port comes back on-line.

Any errors that occur during a serial I/O operation are listed in the ERROR MESSAGES section of this manual.

THE COMMUNICATION PORT

The **1250** is equipped with an isolated RS-232/RS-422 serial communication port, which is used to connect to host computers and other serial devices. The communication port contains isolated RS-232/RS-422 electronics, status LEDs, audio beeper, a 9-pin output connector, and an internal RS-232/RS-422 selector switch.

There are for sets of red/green LEDs, which show the state of the input/output signals. Green means the signal is low or off, while the red means the signal is high or on. When

the unit is sending or receiving data, the LEDs blink, showing the passage of the serial data stream.

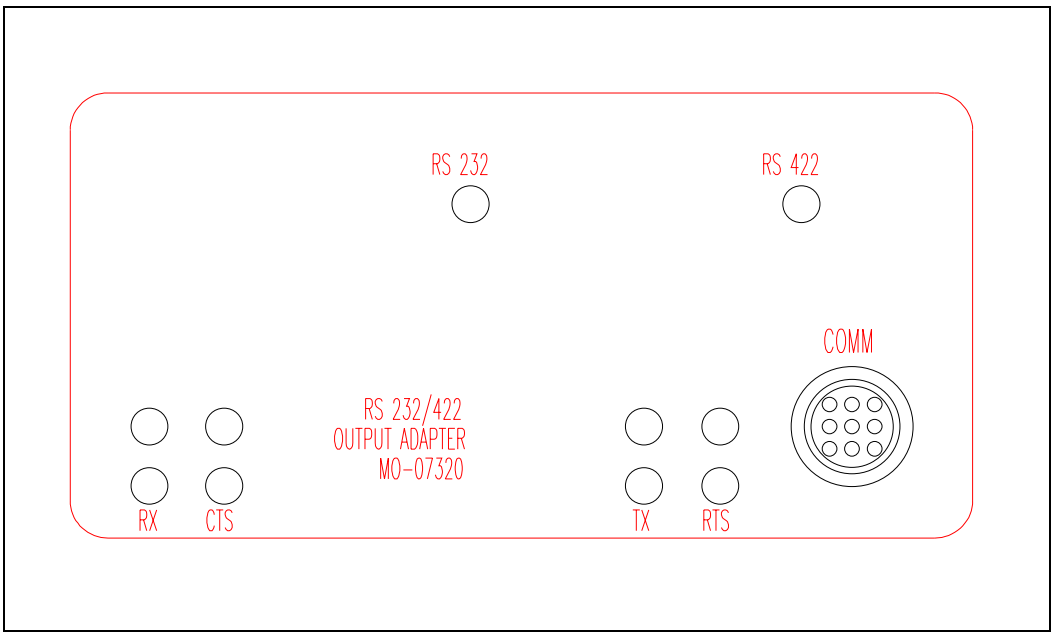

The **1250** port can be configured for either RS-232 or RS-422 level signals. The RS-232/RS-422 status LEDs on the unit indicate the current settings. To change the selection, you must open the door to reveal the 232/422 selection switches. There are three switches. All three switches must be thrown in the same direction. Set the switch to the desired setting and close the door.

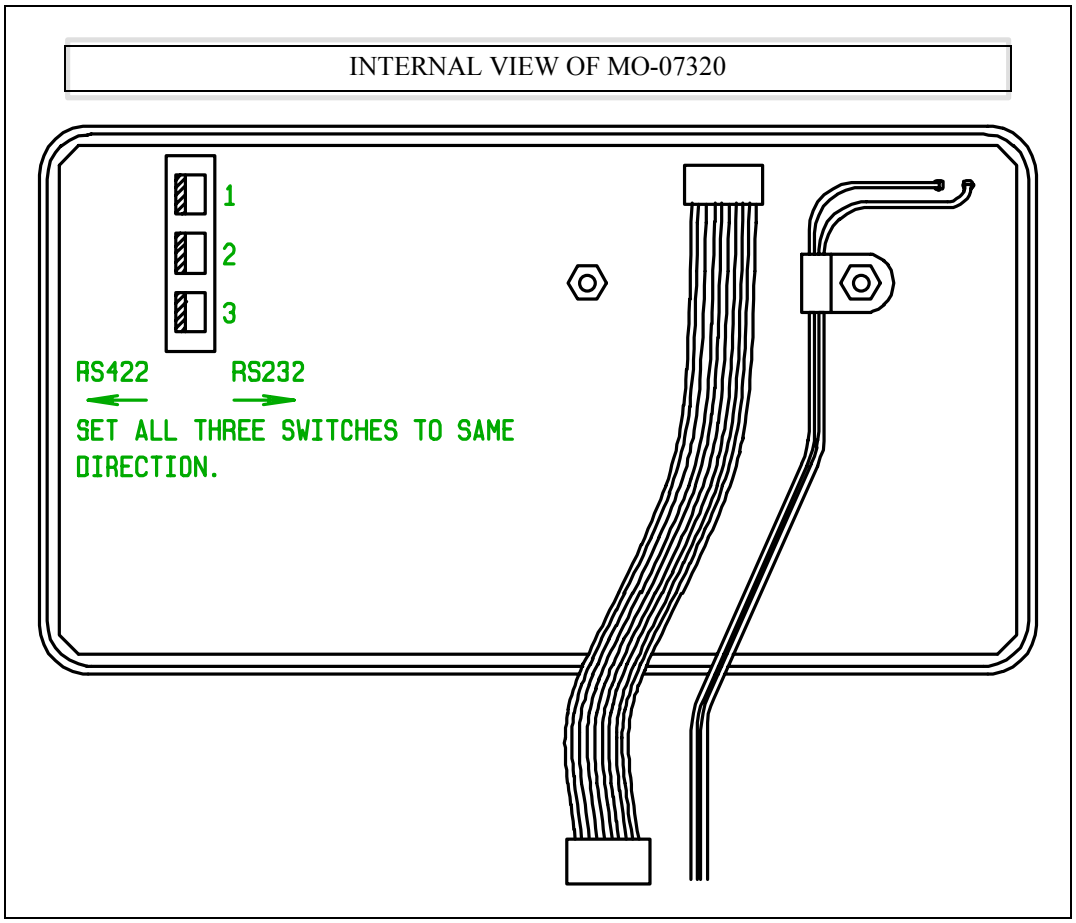

CONNECTING TO RS-232C DEVICES

RS-232C is an abbreviation for Recommended Standard 232, Revision C. This standard comes from the engineering department of the Electronic Industries Association (EIA). RS-232C defines the wiring between two serial devices. It also defines the purpose of 25 different wires, which pins they should terminate on, and even what voltage levels, current drains and loads are allowed.

Of the 25 pins/wires defined by the standard, only 11 are used for asynchronous communications. The others are used for synchronous communication or are reserved for future use.

Although there are 11 used for asynchronous communication, the **1250** can communicate with as few as three (transmit, receive, and ground) using software handshaking, or as many as five (transmit, receive, RTS, CTS, and signal common) using hardware handshaking. This means that either a three-wire or five-wire cable could connect the **1250** and a host storage device.

NOTE: The host storage device could be a computer, tape punch, another **1250**, or any other type of serial device.

RS-232 PIN CONFIGURATION

The MO-07320 serial output adapter uses an industrial round nine-pine AMP connector for its serial output, rather than the normal (and somewhat fragile) D-subminiature connector found on most computers and RS-232 devices.

The following is a description of each of the nine pins of the port.

Signal Name	Port A Pin	Description
SHIELD	PIN 1	Protective shield. Do not tie to PIN 7.
RIN	PIN 2	Received data input to **1250**.
XOUT	PIN 3	Transmitted data output from **1250**.
	PIN 4	+5 VDC @ 25mA
	PIN 5	+12 VDC @ 25mA. May be used for pull-up.
	PIN 6	-12 VDC @ 25mA
GND	PIN 7	Signal ground.
CTRL-OUT	PIN 8	Control status line. Output from **1250**
STAT-IN	PIN 9	Input status line. Input to **1250**

NOTE: **CTRL-OUT** and **STAT-IN** are used rather than the more conventional **RTS** or **CTS**, since these imply specific data set and data terminal definitions and do not function identically on all serial devices. By choosing more general names, the correct connection to the remote equipment must be made based on signal function rather than assuming the same named pins are automatically connected.

The signal levels from the **1250** are RS-232 compatible and could be connected directly to a remote computer up to 50 feet away using any type of standard cable, or up to 500 feet away with special RS-232 extended distance cable. To use RS-232 communications over 500 feet requires the addition of short haul direct wire or fiber optic modems to boost the range. The RS-422 setting of the **1250** serial port allows for direct connection to RS-422 devices over one mile away and may be the better choice for long distance links. See the section on RS-422 communications later in this chapter for further details.

The MO-07320 RS-232/422 output adapter assembly provides total electrical isolation between the **1250** internal electronics and the transmission wire to the remote computer or serial device. As long as the distance between the two devices is within RS-232 or 422 specifications, no additional isolation is needed to protect against ground loops or power system problems. However, there can be considerable electrical noise generated on the wires leading from the **1250** to the remote computer. While this will not harm the **1250** due to its built-in isolation, the noise could damage the input circuitry at the remote computer. For this reason, we recommend that all installations include some sort of transient protection and isolation at the serial port of the remote computer to protect it against line-induced noise damage. There are also RS-422 to RS-232 conversion modems available that also provide this type of isolation and transient protection. By setting the **1250** for RS-422 communication, and using one of these RS-422 to 232 modems, the proper isolation and transient protection is achieved, along with increasing

the maximum transmission distance. See the RS-422 section of this chapter for further details.

RS-232 FOR HARDWARE HANDSHAKING

The following drawings show the typical connection from a **1250** to the standard 25-Pin and 9-Pin RS-232 connectors found on most IBM compatible computers and peripherals. For hardware handshaking, five wires are required: transmit data, receive data, RTS, CTS, and signal common.

RTS/CTS HARDWARE PROTOCOL

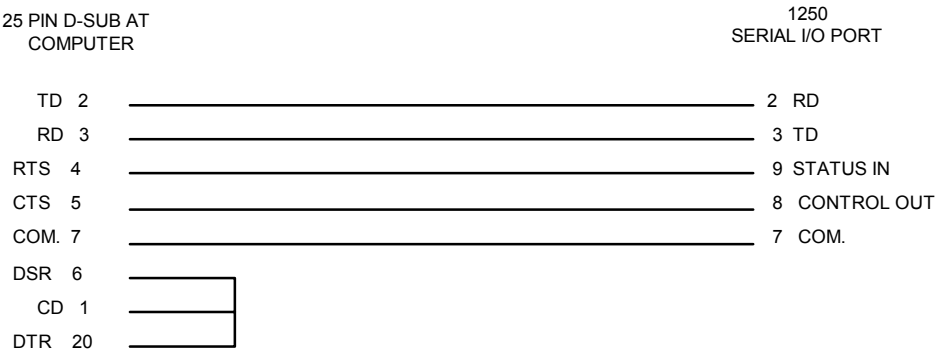

RTS/CTS HARDWARE PROTOCOL

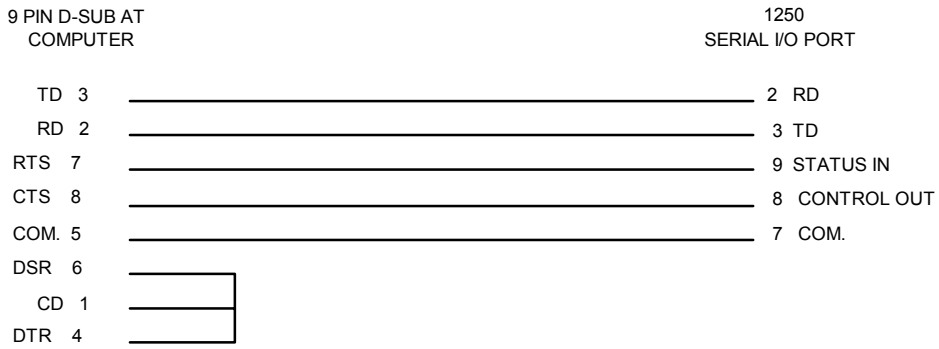

RS-232 FOR SOFTWARE HANDSHAKING

The following drawings show the typical connection from a **1250** to the standard 25-Pin and 9-Pin RS-232 connectors found on most IBM compatible computers and peripherals. Since software handshaking uses transmitted characters to control the data flow instead of separate hardware lines, only three wires are required: transmitted data, received data, and signal common.

XON/XOFF SOFTWARE
PROTOCOL

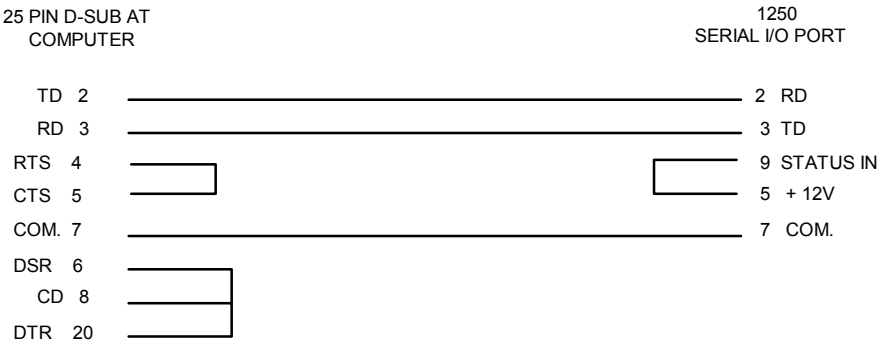

XON/XOFF SOFTWARE
PROTOCOL

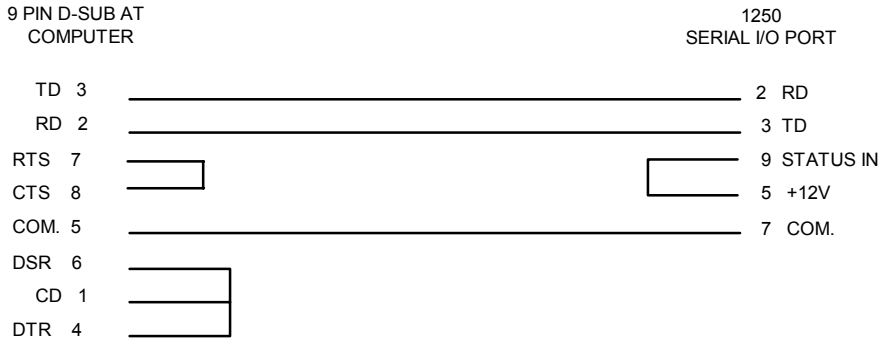

CONNECTING TO RS-422 DEVICES

The serial port on the **1250** may be configured for either RS-232 or RS-422 operation. RS-232 is more limited in distance, and in some cases, may be more susceptible to noise, since it is a single-ended ground reference signal. RS-422 is a differential signal type signal, which permits longer transmission distances (over one mile) and better noise immunity.

If the remote computer is equipped with an RS-422 compatible port, the **1250** could be connected directly to it. However, while the RS-422 port on the **1250** is electrically isolated from the internal circuitry, the RS-422 port on the remote computer may not be. Therefore, even though a modem is not required to extend the distance of the transmission, we recommend that some sort of modem or transient protection device be installed at the host computer to protect it from line-induced noise.

Most computers have only RS-232 level serial ports and require an RS-422 to RS-232 converting modem. This has two benefits. First, it provides the long distance transmission capability of the RS-422 signals. Second, if the proper type of modem is selected, it provides complete electrical isolation between the long transmission wire and the computer's sensitive serial port. The **1250** has such a modem available as an accessory item. Part number MO-06707-0 includes a 115 VAC adapter while MO-06707-1 includes a 230 VAC 50/60 HZ adapter. This modem provides the proper electrical isolation to protect the host computer port.

Since the **1250**'s RS-422 port only supports the transmit and receive lines, hardware handshaking (RTS/CTS) isn't possible. Consequently, the host computer must use software handshaking (XON/XOFF) to control the data flow between the **1250** and the host computer.

Signal levels are RS-422 compatible. Only the following signals are used in the RS-422 mode:

SIGNAL NAME	PORT	DESCRIPTION
SHIELD	PIN 1	Protective shield. Do not connect to signal ground.
	PIN 2	B - Received data input from **1250**
	PIN 3	B - Transmitted data output from **1250**
	PIN 4	+5 VDC @ 25mA
	PIN 5	+12 VDC @ 25mA
	PIN 6	12 VDC @ 25mA
GROUND	PIN 7	Signal ground. Do not connect to shield ground.
	PIN 8	A - Transmitted data output to **1250**
	PIN 9	A - Received data input to **1250**

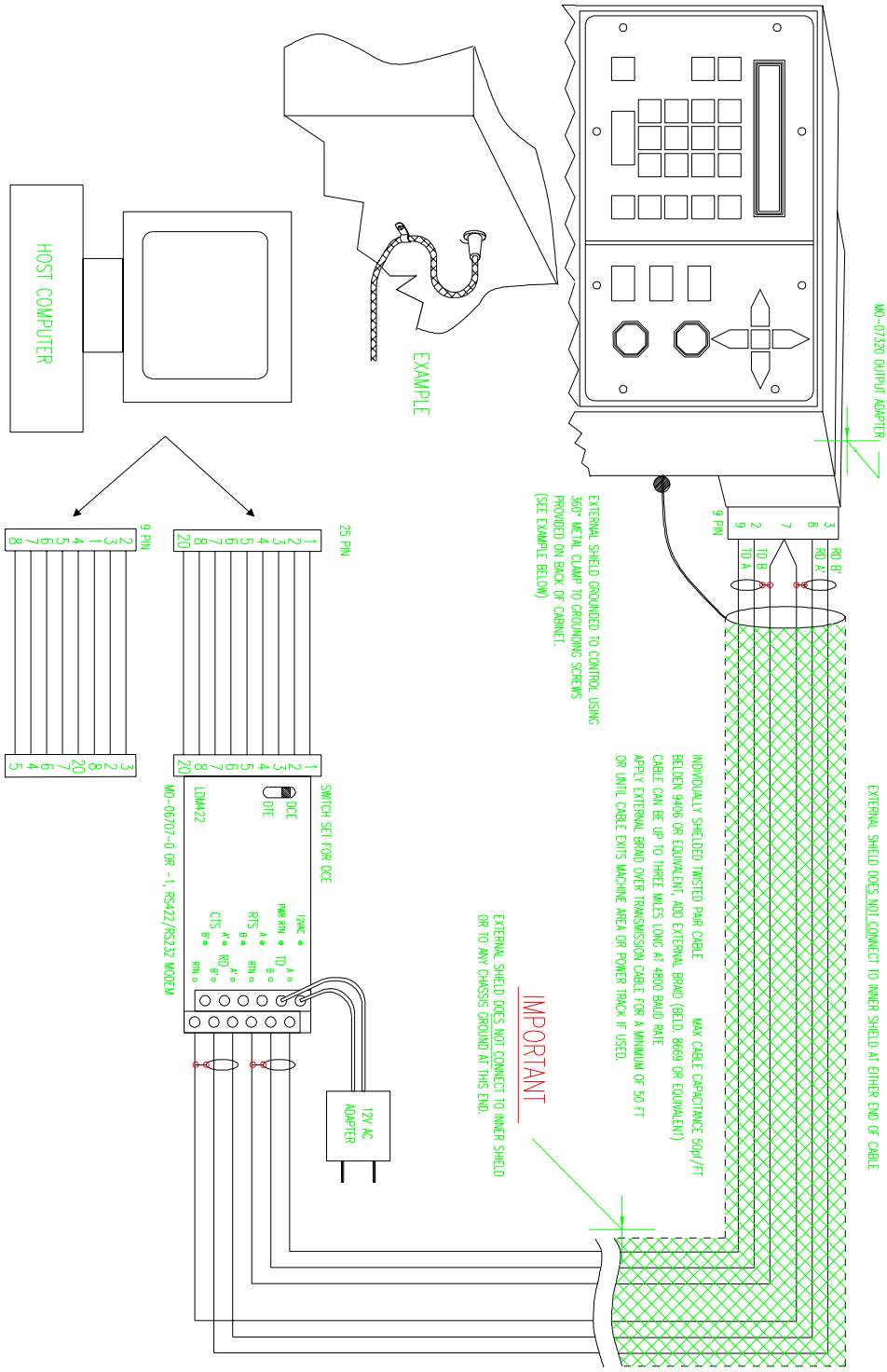
HOST COMPUTER
EXAMPLE
MO-07320 OUTPUT ADAPTER
9 PIN
RD B'
RD A'
TD B
TD A
EXTERNAL SHIELD GROUNDED TO CONTROL USING 360° METAL CLAMP TO GROUNDING SCREWS PROVIDED ON BACK OF CABINET. (SEE EXAMPLE BELOW)
INDIVIDUALLY SHIELDED TWISTED PAIR CABLE BELDEN 9406 OR EQUIVALENT. ADD EXTERNAL BRAID (BELD. 8669 OR EQUIVALENT)
MAX CABLE CAPACITANCE 50pf/FT
CABLE CAN BE UP TO THREE MILES LONG AT 4800 BAUD RATE
APPLY EXTERNAL BRAID OVER TRANSMISSION CABLE FOR A MINIMUM OF 50 FT OR UNTIL CABLE EXITS MACHINE AREA OR POWER TRACK IF USED.
EXTERNAL SHIELD DOES NOT CONNECT TO INNER SHIELD AT EITHER END OF CABLE
IMPORTANT
EXTERNAL SHIELD DOES NOT CONNECT TO INNER SHIELD OR TO ANY CHASSIS GROUND AT THIS END.
9 PIN
25 PIN
SWITCH SET FOR DCE
DCE
DTE
LDM422
MO-06707-0 OR -1, RS422/RS232 MODEM
12VAC
PWR RTN
TD
RTS
RD
CTS
12V AC ADAPTER

CHARACTER FORMATS

The **1250** accepts several different character formats. The most common are:

ASCII (RS-358)	Even parity, 7 data bits, 1 or 2 stop bits
EIA (RS-244)	Odd parity, 8 data bits, 1 or 2 stop bits (Flexowriter). (EIA RS-244 does not support some functions and codes and cannot be used if software handshaking is used, since there are no control codes defined in the RS-244 specification.)

You select the character format either during INSTALLATION AND SETUP, or when the serial I/O operation is selected.

For the remainder of this description the < > symbols are used to indicate specific characters as follows:

<CR>	Hex 0D	ASCII carriage return
<EOB>	Hex 0A	ASCII end-of-block (also line feed)
<XON>	Hex 11	ASCII DC1 (transmitter on)
<RON>	Hex 12	ASCII DC2 (receiver on)
<XOFF>	Hex 13	ASCII DC3 (transmitter off)
<ROFF>	Hex 14	ASCII DC4 (receiver off)
<EOF>	Hex 04	ASCII end-of-file
<NULL>	Hex 00	Blank tape

The hex code shown must have the appropriate parity bit added to the code.

The actual program format can be one of several types, as listed in the programming section of this manual.

HANDSHAKING PROTOCOL SPECIFICATIONS

Handshaking is the way in which the data flow between the **1250** and the host storage device is regulated and controlled. There are basically two types used by the **1250**. The first type is hardware handshaking, which uses the status in and control out signal lines (RTS and CTS) to control the data that flows through the transmit and receive lines.

The second type is software handshaking, which uses special characters to control the flow of data between two serial devices. They are <XON> for transmitter on and <XOFF> for transmitter off.

RTS/CTS HARDWARE PROTOCOL

NOTE: RTS/CTS hardware protocol is not supported when the port is configured as an RS-422 port.

The RTS/CTS hardware protocol uses electrical control signals defined by the RS-232 standard to regulate the transmission. The **1250** has one input status line and one output control line to perform this handshaking. The status input to the **1250** should be connected to a suitable status output signal from the external device. Similarly, the **1250** output should be connected to a status input line on the remote device.

Traditionally, these two signals have been called request-to-send (RTS - control output) and clear-to-send (CTS - status input). However, the exact definition may vary, thus they are referred to as only the status input and control output lines. In this way, it implies that they should be connected to give the correct function, not necessarily to the pin bearing the same name.

By using this type of handshaking, either the **1250** or the external device can control the data transmission. This compensates for data that may be transmitted faster than a particular device can process it. If no handshaking is used, data can be lost due to this processing time. With the handshaking, either device can stop the transmission until it is ready to accept more data.

XON/XOFF SOFTWARE PROTOCOL

The XON/XOFF software protocol uses special ASCII control characters to control the communication process. Since the EIA (RS-244) character format does not have equivalent characters for these codes, it cannot be used with software protocol. The following four ASCII codes are used:

<XON>	DC1 - Transmitter on	>11
<RON>	DC2 - Receiver on	>12
<XOFF>	DC3 - Transmitter off	>13
<ROFF>	DC4 - Receiver off	>14

<RON> and **<ROFF>** are used by the transmitter to signal the receiving device before the actual data transmission begins. In most cases, these codes are ignored. **<XON>** and **<XOFF>** are used by the receiving device to turn the sender's transmitter on or off and thus control the data transmission.

In a typical case, the sender transmits **<RON>** and then begins sending the data. If the receiver cannot process the data fast enough, it sends **<XOFF>** back, causing the data to stop. When the receiver is ready for more data, it sends **<XON>** and the transmitter starts sending data again.

NOTE: When the **1250** is receiving data from a host computer, it sends **<XOFF>** when it needs to stop the data transmission to process the data already received. The remote computer must stop sending data within three characters after receiving the **<XOFF>** code. If it does not stop, it causes an **OVERRUN** error at the **1250** and the download is terminated.

Since software **<XON> / <XOFF>** handshaking uses control codes sent over the same wires as the transmitted data, a three-wire link (RS-232) is possible: transmit, receive and signal common. Some types of short haul modems only support this type of link, since they only provide for one signal to be transmitted in each direction.

NOTE: When the MO-7320 Serial Output Adapter is set for RS-232 mode, and software **<XON> / <XOFF>** handshaking is used, the status-input line must be kept at a high level. Tie Pin 5 to Pin 9 on the nine-pin output connector when software protocol is selected.

SPECIAL HANDSHAKING PROTOCOLS

The **1250** also supports some special handshaking protocols designed for specific devices:

3- BURNY 1V	Special protocol to communicate with BURNY 1V controls
5- PTAPE	Special protocol to communicate with Spooling Tape Readers

These protocols should only be used when communicating with these devices.

COMMUNICATION ENHANCEMENT FEATURE

COMMUNICATION ENHANCEMENT is one of two optional communication protocols, which can be used to provide a more automated link between the host computer and the **1250**. When this feature is installed, the **1250** transmits a request to the host computer when you select a **LOAD- FROM RS232** operation. The remote computer can interpret this request and send back the corresponding program without operator assistance at the computer. This allows for unattended operation of the computer and makes for a more automatic, more efficient link.

For **LOAD** operations, the **1250** sends the following header when a new program is requested:

DOWNLOAD PROGRAM:12345678 <CR><EOB>

(Program 12345678 is used as an example.)

LOAD- FROM RS232 -- USING RTS/CTS (Hardware Handshaking)

Select the **LOAD- FROM RS232** function and enter the desired program number. When you press <ENTER>, additional communication parameter prompts may be displayed (as set by SD50).

Once the parameters are entered, the **1250** turns on its control line and waits for the remote device to signal it is ready to receive data, by sensing the status input line.

At this point, if the COMMUNICATION ENHANCEMENT feature is enable, the **1250** sends 10 <null> characters, delays for one second, and then sends the following message:

DOWNLOAD PROGRAM:12345678 <CR><EOB>

(Program 12345678 is used as an example.)

The remote device begins transmission of the program. If the **1250** needs to halt the transmission, it turns off its control output line, which should cause the remote device to

stop sending data. The **1250** turns the control output line back on when data transmission can resume.

If the COMMUNICATION ENHANCEMENT feature is not enabled in the system when the End-of-program code is received, the **1250** turns off its control output line while the program load is finishing. If the program ends with the Program End/Rewind code, the download software terminates and displays **PROGRAM LOADED**. However, if the program just loaded ended with the Program End code (no rewind), the download software finishes loading the first program, and after a slight pause, turns the control output line back on and displays **WAITING FOR NEXT**. This allows multiple programs to be loaded by ending the programs with the Program End code (no rewind). Each program is loaded based on the program number defined by the **P** block in the program (see individual Word Address/ESSI specifications). If a program does not specifically define a program number, the **1250** assigns a number with the first digit containing an **A** to indicate that it was assigned.

If the COMMUNICATION ENHANCEMENT feature is enabled when the End-of-program code is received, the **1250** sends a termination message of **<BEL> <BEL> <BEL> EOF:### <CR> <LF>** where ### represents a three digit status code. A complete list of the status codes and their translations is located at the end of this section. The **1250** then turns off its control output line, finishes loading the program and then either terminates the download with a **PROGRAM LOADED** message, or re-enables its port for the next program as described in the section above.

The device sending the program can indicate an end-of-file (EOF) condition by sending an ASCII Control-D (hex 04). This character indicates that the download link should be terminated. This special EOF character can be used by the host computer to indicate that the program requested does not exist by sending only the EOF code. The **1250** detects that only the EOF was sent and displays **NO PROGRAM FOUND**. The EOF character does not have to be used for normal downloading.

TYPICAL LOAD- FROM RS232 USING XON/XOFF (Software Handshaking)

Download to the **1250** using software handshaking requires that the remote device support **<XON>/<XOFF>** software conventions.

- Press <SHF> and enter the program number to receive the data. Make the various parameter selections.
- The **1250** turns on its control line and waits for the status input line to indicate that the remote device is ready (these can be tied together).
- The **1250** indicates that transmission can start by sending:

  <XON><RON><10 NULLS><ROFF>.

  The **1250** waits one second, and then sends another <XON>
- If the COMMUNICATION ENHANCEMENT feature is enabled, the **1250** sends the following message to request the specific program:

  <RON> DOWNLOAD PROGRAM:12345678 <CR><EOB>

- The remote device can begin transmission any time after receive the <XON> character. If the **1250** needs to halt the transmission, it sends an <XOFF> character, which should cause the remote device to stop sending data. The **1250** sends an <XON> character when the transmission can resume.

NOTE:	The status input line on the **1250** must be kept at a high level when software handshaking is used.

- When the End-of-program code is received, the **1250** sends a communication link termination message of **<BEL><BEL><BEL>EOF:###<CR><LF>** where ### represents one of the three-digit status codes listed at the end of this section. The **1250** then sends an **<XOFF> <ROFF>** and then turns off its output status line.

CAD LINK (CLINK) PROTOCOL

CLINK is another special communications protocol, which allows the **1250** to send and receive part cutting programs from a remote computer via commands sent through the RS-232 port. The host computer can be programmed to use this protocol to provide a totally automatic link. An operator is not required at the host computer.

Currently there are four basic commands that are supported.

<ESC>!FD	File data command
<ESC>!FG	File get command
<ESC>!FQ	File queue command
<ESC>!QQ	File quit command

CLINK uses XON/XOFF software handshaking to control the flow of data between the two devices. A character-by character check for XON or XOFF (>11 & >13) codes is done. The **1250** does not support any block type protocols.

FILE DATA <ESC>!FD

This command is used in two different ways. For the **1250** to send a program to the remote computer, the program data must be preceded by a FILE DATA command string. The message is a sequence of characters incorporating the desired program number.

For example, for the **1250** to send program number 8765 to the remote computer, the following message would be sent first:

<ESC>!FD8765<CR><LF>

where:

ESC	is the ASCII escape character
!	is the ASCII exclamation point
FD	is the abbreviated command for FILE DATA
8765	is the program number stored in the **1250**, which is sent to the computer. The number is sent as ASCII numeric characters.

<CR>	is the ASCII carriage return character
<LF>	is the ASCII line feed character.

The **1250** pauses for one second and then begins to send program data as follows:

<CR><LF>	
%	
P8765	
... PROGRAM DATA	
...	
...	
...	
... PROGRAM DATA	
M30<CR><LF>	
^Z<CR><LFl	signal for end of program data
<ESC>!QQ###<CR><LF>	status code sent by the **1250**

where:

ESC	is the ASCII escape character
!	is the ASCII exclamation point
QQ	is the abbreviated command for FILE QUIT
###	is a three-digit status code
<CR>	is the ASCII carriage return character
<LF>	is the ASCII line feed character
^Z	is the ASCII Control-Z character.

FILE GET <ESC>!FG

The **1250** requests a program from the storage computer, by specifying a program number of up to eight digits. (Only numeric file names are used, no alphabetic characters are allowed.) The message is a sequence of characters incorporating the desired program number.

For example, to request program number 12345, the **1250** sends the following sequence to the computer.

<ESC>!FG12345<CR><LF>

where:

ESC	is the ASCII escape character
!	is the ASCII exclamation point
FG	is the abbreviated command for FILE GET
12345	is the program number requested from the storage computer. The storage computer should interpret this command and send

back the appropriate ASCII file on the store computer preceded by a FILE DATA command. Thus, the FILE GET command is always sent by the requesting device and the FILE DATA command always precedes transmission of the actual program for either storing or retrieving data to/from the remote computer.

<CR> is the ASCII carriage return character

<LF> is the ASCII line feed character.

NOTE: The remote computer cannot request a program from the **1250**. All transfers are initiated at the **1250** only.

If the **1250** issues a FILE GET request to the remote computer for a program (12345 for example) that does not exist, the remote computer should send the following response:

<ESC>!FD12345<CR><LF><^Z>

where the ^Z termination character is sent immediately after the FILE DATA header, indicating the program does not exist.

The **1250** then displays **PGM NOT FOUND**.

FILE QUEUE <ESC>!FQ

The FILE QUEUE command allows the **1250** to make a request to the storage computer for the next program in its queue. There is no program number sent with the FILE QUEUE command. The storage computer must acknowledge the **<ESC>!FQ** request with **<ESC>!FD########<CR><LF>**, pause once second, and then send the program that is next on the queue.

NOTE: An acknowledgment of **<ESC>!FD<CR><LF>** with no program number also works. However, the actual file that is sent to the **1250** must contain a program number block, such as **P12345678** for Word Address. If no program number block is included in the program, the **1250** creates a program number of **FFFFFFFF** for that file.

FILE QUIT <ESC>!QQ

Once a file has been transferred from the storage computer to the **1250**, the **1250** send an **<ESC>!QQ###** followed by a three-digit status code. The status codes are listed at the end of this section.

The following example assumes you request program number 12345 from the storage computer.

<ESC>!FG12345<CR><LF> Request message sent to storage computer by **1250**

<ESC>!FD12345<CR><LF> (Storage computer sends acknowledgment to **1250**)

One second pause

<CR><LF>	Sends **<CR><LF>** before **%**
%<CR><LF>	Storage computer begins to send ASCII file
Program data sent by storage computer to 1250	
M30<CR><LF>	End of program code
^Z<CR><LF>	Signal for End-Of-Program data
<ESC>!QQ0<CR><LF>	Program completed, no errors

NOTE: Once digit of **0** is returned on a successful completion with no errors. All other status codes are three digits.

THREE DIGIT STATUS CODES

Normal completion:

000	No error

Load process errors:

102	System error
104	System error
106	System error
108	System error
110	Data format error (program syntax)
112	EOF error (no end-of-program code)

Program memory errors:

202	Memory disabled
204	System error
206	Program size error (exceeds 128k bytes)
208	Memory invalid
210	Memory full
264	Custom auxiliary code table error

I/O Operation errors:

302	System error
304	<RECYCLE> key abort
306	Device off-line
308	Device not ready
310	Read time-out
312	Write time-out
314	Parity error
316	Overrun error

318	Framing error
320	Data handshake error

BLANK

SERVICING THE CONTROL

Read this section before servicing the control.

Before any type of service work is done on the **1250**, there are some precautions that should be taken.

BACK-UP PROGRAMS STORED IN THE 1250

The **1250** has a battery system that maintains power to the memory even when the AC power to the unit is removed. This keeps the programs stored in memory from being erased when the power is turned off. While this battery system is reliable, there are still cases where something causes the stored programs to be lost. Sometimes it can be a failure of a component inside the **1250**, or it can be an outside event, such as a lightning strike, or even dropping a plate on top of the control. There are also cases where a new version of software requires the memory to be erased and all programs re-loaded.

Regardless of the cause, there are cases where all the programs stored in memory are lost. **For this reason, any important programs should always have a back-up copy stored away from the 1250.** This way, after the damage is repaired or the defective component is replaced, the important programs can be re-loaded from the back-up copy.

NOTE: It is important that the back-up copy is stored **away** from the **1250** since the back-up copy may be damaged along with the control (in the case of a dropped plate or lightning strike).

If the programs are stored on a host computer, make sure there are back-up copies of the computer data, since a problem there (such as a hard disk crash) could cause the loss of program information. If the programs are stored inside the **1250** only, the RS-232 port on the control can be used to store the programs to one of several sources.

If the unit is equipped with an internal floppy disk, copy all important programs to a floppy disk, and remove the floppy from the unit. We also recommend a second floppy disk containing the same information.

If there is no internal floppy, the RS-232 port can be used to send the programs to a host computer. This requires software in the host computer that is capable of accepting the programs from the **1250** and storing them to a disk file. After the programs are sent to the computer, make back-up copies of the computer programs and store them away from the computer.

Finally, there are portable floppy disk systems available that can accept programs from the **1250** RS-232 port and store them directly to a floppy disk. Again, more than one copy is advised.

It is your responsibility to maintain back-up copies of all important programs. All programs must be backed up before any service work is done to the control or before software is updated. This will prevent any loss of program information.

BEFORE CALLING THE FACTORY

Before you call the factory for any type of assistance it is important that you have the **serial number** and **software version date code**. Use DISPLAY MODE 80 to get this information.

DISPLAY MODE 80- CONFIGURE displays the system serial number, software version, and the amount of memory installed in the unit. Press <ENTER> to view a list of all the available features. Either **ON** or **OFF** is displayed next to the features, indicating whether or not the feature is enabled in the unit.

When first selected, the display continuously scrolls through the following:

SERIAL xxxxxxxxx	:	Serial Number
VERSION mm/yy/dd	:	Software Version
HDW TYPE -10	:	Hardware version number
____K INSTALLED	:	Amount of memory

NOTE: Before calling regarding a service or operation problem, use DSPY-80 and write down the serial number and software version number displayed on the readout. This will aid the service personnel in determining the type of system, and the software installed. The serial number must be the one displayed on the readout, not the one found on a label somewhere on the enclosure.

INSTALLATION AND SETUP

This section describes SERVICE MODE displays and adjustment procedures for the **1250**. The displays show machine conditions and can be helpful in diagnosing a problem. In addition, the SERVICE MODE permits adjustment of the operating characteristics of the control in order to tailor it to a specific machine. Once the operation has been adjusted for optimum performance, the parameters are stored in non-volatile memory. This ensures that the operation of the control remains consistent and not affected by power failures.

NOTE: This section describes certain parameters that are common to only one type of cutting, such as BLEED-OFF time, which is used in oxygen/fuel cutting, or ARC DELAY, which is for plasma cutting. These may not be used on all cutting machines, depending on the type of cutting tools installed. Explanations are given for the majority of possible cutting tool configurations.

SERVICE MODE KEY

Throughout this section, there are references to the <SERVICE> key. This key is not labeled on the operator's panel, since there is no need for it during normal operation. The <SERVICE> key is located approximately four inches from the right side of the panel and 1.5 inches from the top of the panel (see figure). This key may be pressed at any time, during any operation, to enter the SERVICE mode main menu. When the desired service function is complete, press <SERVICE> and SERV00- EXIT to exit the service mode and return to the previous operation.

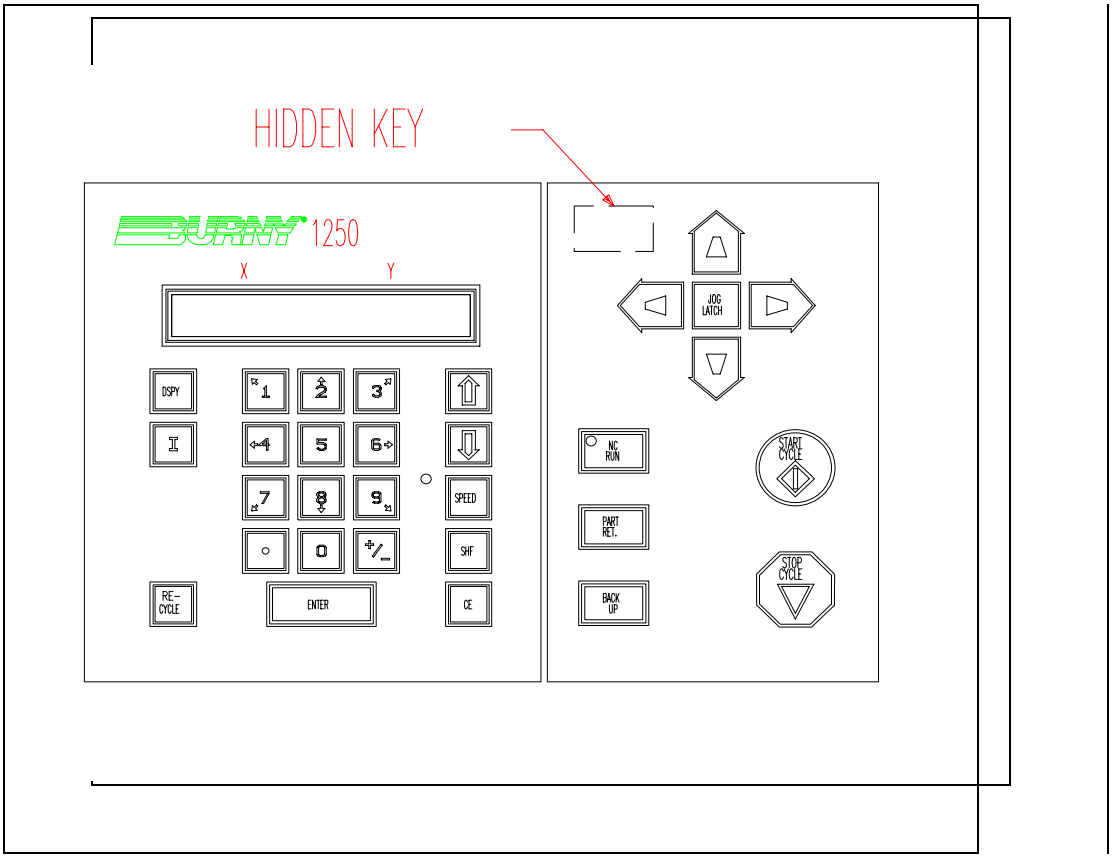

DISPLAY FUNCTIONS

Most of the DISPLAY functions are described in the DISPLAY MODES section of this manual. However, several of the displays are not used during normal operation and so are not covered in that section.

Most of the DISPLAY functions are also available by pressing the <SERVICE> key. If you choose a DISPLAY function (by pressing <DSPY>), values can be displayed but not changed. If the same function is selected as a SERVICE function (by pressing <SERVICE>), values are also displayed, but may be altered by entering the desired values.

Some of the SERVICE functions are not available through the <DSPY> key.

POWER UP DIAGNOSTICS

When you first power-up the **1250**, it automatically performs several diagnostic checks. These are indicated on the readout as they are being performed. Normally it should continue to sequence through the tests and then automatically start normal operation. If a problem is detected, the testing stops and an error message is displayed. In most cases, this indicates a problem with circuitry and should be reported to the factory for information on repair or replacement.

The final test before normal operation begins is a check of the keypad to detect any shorted keys. Since no keys are supposed to be pressed during the power-up sequence, the test routine checks that all keys are open and then allows normal operation to begin. If a shorted key is found, an error message is displayed (**KEYBOARD ERR- XX**), where XX is the key that is closed, from the following table:

XX	Key Name	XX	Key Name
00	<0>	46	<I>
01	<1>	66	<SHF>
02	<2>	80	<JOG UP>
03	<3>	81	<JOG DOWN>
04	<4>	82	<JOG RIGHT>
05	<5>	83	<JOG LEFT>
06	<6>	84	<JOG LATCH>
07	<7>	85	<NC RUN>
08	<8>	86	<CYCLE START>
09	<9>	87	<CYCLE STOP>
10	<+/->	88	<BACK UP>
11	<.>	89	<PART RET.>
12	<ENTER>	8A	UP scroll arrow key
13	<CE>	8B	DOWN scroll arrow key
40	<DSPY>	8C	<DSPY>
41	<SERVICE>	8E	<RECYCLE>
45	<SPEED>		

SERVICE MODE

You may press <SERVICE> at any time, during any operation, to access the SERVICE FUNCTION menu. When you press <SERVICE>, the readout displays **SERV00- EXIT MODE**. Use the UP or DOWN scroll arrow keys to enter the SERVICE FUNCTION number to select the desired SERVICE FUNCTION from the following list. Once the correct value is displayed, press <ENTER> to access the function.

NOTE: Since the DISPLAY mode accesses many of the same functions as the SERVICE mode, the following menu also displays the various DISPLAY FUNCTIONS.

SERVICE MODE MENU

SERV00- EXIT MODE
SERV01- X/Y DISPLAY
SERV02- PARTS CUT
SERV03- FEEDRATE
SERV05- SYSTEM STATUS
SERV10- SYSTEM DATA SETUP

SERV11- DISPLAY VARIABLES

SERV30- SHOW WORD
SERV31- SHOW DOUBLE WORD
SERV32- SHOW CRU WORD
SERV33- SHOW BYTE
SERV34- SHOW CRU BYTE

SERV40- CURRENT TABLE
SERV41- TABLE 1 DATA
SERV42- TABLE 2 DATA
SERV43- TABLE 3 DATA
SERV44- TABLE 4 DATA

SERV50- AXIS SPEEDS
SERV51- SPEED CALIBRATION
SERV52- MEMORY RESET
SERV54- REFERENCE ADJUST

SERV70- CUSTOM AUX CODES
SERV78- LOOP BACK TEST

SERV80- CONFIGURE

SERV97- VARIABLE STORE
SERV98- SYSTEM RESET

SERV00- EXIT MODE (DSPY00- EXIT MODE)

This selection is used to exit the SERVICE mode and return to normal operation.

NOTE: If SERVICE or DISPLAY mode is used while a part is actually running, the **EXIT MODE** must be used to return to the normal operation before the cutting mode (automatic, manual, or test) can be changed.

SERV01- X/Y DISPLAY (DSPY01- X/Y DISPLAY)

Displays the current X/Y axis positions. If used while a part is running, the dimensions reflect the distances from the initial start position. At other times, the readouts can be cleared and used for X/Y measuring. See the DISPLAY MODES section for further details.

SERV02- PARTS CUT (DSPY02- PARTS CUT)

When running a program, this display shows the number of part cycles performed. Multiply by the number of torches for the actual number of parts cut.

SERV03- FEEDRATE (DSPY03- FEEDRATE)

Shows the current setting of the <SPEED> key. For correct operation, this number must be within 5% of the actual machine speed. If it is significantly different, the operation becomes erratic. (See SERV54 for calibrating feedrate input.)

If the digital feedrate feature is enabled (see SD62-SYSCFG2) and you select SERV03, the control first displays the current feedrate setting and then allows you to change the digitally controlled feedrate. Use the UP or DOWN scroll arrow keys to increase or decrease the feedrate at a smooth rate, or enter the desired feedrate directly on the keypad. When you press <ENTER>, the new feedrate takes effect.

NOTE: If you lower the feedrate, the displayed value ramps down to the new value. Wait until the display has reached the entered feedrate value before exiting the SERV03 mode; the feedrate does not continue to ramp down if the display is canceled.

SERV05- SYS STATUS

This function gives the status of the system. If a program is running, the display shows the program number of the part being cut.

SERV10- SYS DATA (DSPY10- SYS DATA)

This function is the most important service mode. It allows you to change operating parameters and thus allows you to optimize the control operation for a particular machine.

SYSTEM DATA

This SERVICE / DISPLAY FUNCTION accesses a second menu of all the adjustable parameters in the system. These parameters are used to control the dynamic characteristics of the system and also to configure the **1250** to match the particular cutting machine and interface wiring.

If this function is selected through the DISPLAY mode, they system parameters may be displayed but not altered. Press SERVICE> to display and alter these values.

Once this mode is selected, the display changes to **SD00- EXIT MODE**, which is the first parameter in the list. Use the UP and DOWN scroll arrow keys to scroll to the desired parameter, or enter the two-digit number directly. Once the correct entry is displayed, press <ENTER>. This causes the current value for that parameter to be displayed.

If the value is correct, press <ENTER> to step to the next parameter in the menu. If you need to change the value, enter the desired value using the numeric keypad and decimal point. (Use <CE> if you make a mistake.) Press <ENTER> when the value is correct. Press <ENTER> a second time to step to the next parameter in the menu.

If the parameter requires you to choose between two alternatives, press <+/-> to toggle between the two choices.

NOTE: Some of the parameters do not show their effect on the machine's performance until you press <ENTER> the second time and the menu has been stepped to the next parameter.

SYSTEM DATA PARAMETERS:

SD00- NOT USED
SD01- ARC ON PURGE DELAY
SD02- BLEED-OFF TIME
*SD03- ACCELERATION TIME
SD04- MAXIMUM DRIVE SPEED
SD06- BACKUP SPEED
*SD07- CORNER SPEED
SD08- MINIMUM HOLD SPEED
SD09- ERROR SPEED MAXIMUM
*SD10- RUN SPEED LIMIT
SD11- TRAVERSE SPEED LIMIT
*SD14- GAIN BREAK
SD15- ERROR WARNING DISTANCE
*SD16- LOOP GAIN
SD17- ARC OFF DELAY
*SD18- SLOWDOWN DISTANCE
*SD19- HEIGHT SENSOR DISABLE LOOK-AHEAD
SD20- X ENCODER DISTANCE/REV
SD21- Y ENCODER DISTANCE/REV
SD22- ENCODER LINES/REV
SD23- X ENCODER DIRECTION
SD24- Y ENCODER DIRECTION
SD25- X DRIVE DIRECTION
SD26- Y DRIVE DIRECTION

SD27- PLATE SIDE
SD28- HEIGHT SENSOR RELAY
*SD29- SLOWDOWN RADIUS
*SD30- MINIMUM RADIUS SPEED
SD31- PLASMA TABLE #1
*SD32- MIN SLW ANG
*SD33- MAX SLW ANG
SD40- X MARKER OFFSET
SD41- Y MARKER OFFSET
SD42- MARKER SPEED
SD43- MARKER DELAY
*SD45- DEFAULT DWELL
*SD46- MINIMUM OFF DELAY
SD47- X OFFSET #2
SD48- Y OFFSET #2
*SD49- START DELAY
SD50- SERIAL DEFINITION
SD51- PROGRAM FORMAT
SD52- SPECIAL END-OF-PROGRAM
SD53- FLOPPY EXTENSION
SD60- OPERATING SYSTEM
SD61- SYSTEM CONFIGURATION
SD62- SYSTEM CONFIGURATION #2
SD68- SPEED RANGE
SD69- ALTERNATE LANGUAGE SELECTION
SD70- KNIFE DIAMETER
SD71- KNIFE BP ANGLE
SD74- X OFFSET TABLE 1 TO TABLE 2 HOME POSITION
SD75- Y OFFSET TABLE 1 TO TABLE 2 HOME POSITION
SD76- X OFFSET TABLE 1 TO TABLE 3 HOME POSITION
SD77- Y OFFSET TABLE 1 TO TABLE 3 HOME POSITION
SD78- X OFFSET TABLE 1 TO TABLE 4 HOME POSITION
SD79- Y OFFSET TABLE 1 TO TABLE 4 HOME POSITION
SD80- X OFFSET #1
SD81- Y OFFSET #1
SD82- X OFFSET #2
SD83- Y OFFSET #2
SD84- X OFFSET #3
SD85- Y OFFSET #3
SD86- X OFFSET #4

SD87- Y OFFSET #4
SD88- X OFFSET #5
SD89- Y OFFSET #5
SD90- X OFFSET #6
SD91- Y OFFSET #6
SD92- X OFFSET #7
SD93- Y OFFSET #7
SD94- X OFFSET #8
SD95- Y OFFSET #8
SD96- X OFFSET FROM TABLE 1 TO X HOME LIMIT SWITCH POSITION
SD97- Y OFFSET FROM TABLE 1 TO Y HOME LIMIT SWITCH POSITION

All variables marked with * are also in the overlay tables. See DETAILED MENU for further information.

PARAMETER MENU

Next to each parameter label is the standard unit for that value. All times are entered in seconds. Any distance or speed values are entered in the units selected by the OPERATING SYSTEM parameter (SD60). If you select an INCH system, the units are inches and inches per minutes (IPM). If you select a METRIC system, the units are millimeters and millimeters per minute (MMPM). For this reason, if you are setting up a new system, **SD60- OPERATING SYSTEM** and **SD68- SPEED RANGE** should be set first, so other values that are affected by the INCH/METRIC switch and speed are correct.

SD01- ARC ON DELAY (seconds)

This time value is only used when plasma cutting is selected, and delays the start of motion on a plasma cut after the **ARC ON** input has been received. For plasma systems with CURRENT SENSING RELAY (CSR) outputs, this value is normally set to 0.00, causing the machine to begin moving as soon as the arc transfers to the plate.

For plasma systems without CSR outputs, this timer can be used to delay machine motion for approximately the same time as the purge cycle at the beginning of a plasma cut. Thus the machine holds position until the timer reaches 0 and then begins along the cut path.

If a machine uses oxygen/fuel cutting only, set this parameter to **0**.

SD02- BLEED-OFF TIME (seconds)

This time value is used with OXYGEN/FUEL CUTTING. When the cutting oxygen is turned off at the end of a cut, the machine holds position for the specified time to allow the oxygen to bleed off before moving to the next cut.

If a machine uses plasma cutting only, set this parameter to **0**.

SD03- ACCELERATION TIME (seconds, multiple parameter)

This value sets the acceleration time for the machine to go from 0 to full speed. The value should be set as low as possible to minimize the day that occurs when the machine negotiates a corner. However, it should not be set so low that an abrupt jump occurs after each corner. This value should normally be set between .2 and 1.0 seconds.

SD04- MAXIMUM DRIVE SPEED (IPM/MMPM)

This value must be set to the *maximum drive speed of the machine at full reference.* This value is used in may of the position loop gain and slowdown calculations and if not set correctly, can seriously affect machine performance.

This value must be set to the capability of the drive system, not the desired maximum speed. The maximum speed value cannot exceed the speed range selected by parameter **SD68- SPEED RANGE**. To *limit the speed,* see SD10 and SD11.

SD06- BACKUP SPEED (IPM/MMPM)

This value sets the speed of the machine when you press <BACK UP>. This is the maximum speed when backing up. The speed can be set slower by lowering the value of the <SPEED> key.

There is no acceleration/deceleration when backing up. Therefore, this speed should be set to a low enough speed that the machine can back up around a corner without excessive stress (bumping) in the gearbox or drive system.

SD07- CORNER SPEED (IPM/MMPM, multiple parameter)

This value, along with parameter **SD18**, controls the deceleration ramp used to slow down before a corner. The slope of this ramp is constant regardless of the travel speed as illustrated:

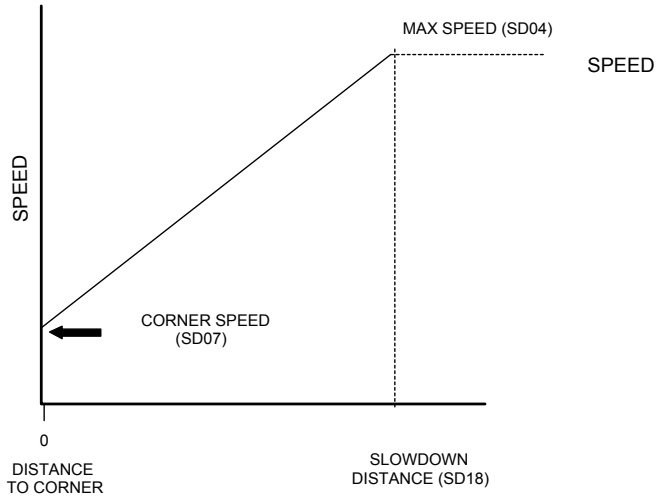

As can be seen from the graph, both the SLOWDOWN DISTANCE (**SD18**) and the CORNER SPEED affect the deceleration ramp. Both these values should be set to the minimum required to achieve acceptable corners on parts. This minimizes the time required to cut the corner, and therefore reduces the variation in the cut quality due to the change in cutting speed.

Typical values are 10 IPM or 250 MMPM for CORNER SPEED, and .75 inch or 19 mm for SLOWDOWN DISTANCE.

TIP: To prevent stalling in corners, do not set the CORNER SPEED to 0.00.

SD08- MINIMUM HOLD SPEED (IPM/MMPM)

This speed value is used when the control is holding the machine in position. The speed entered for this parameter is used as a fixed gain value during the time the machine is within .02 inch or .5 mm of the correct position. Within this distance, the machine is moved at the MINIMUM HOLD SPEED toward the correct position. If the distance is greater than .02 inch, a normal linear proportional gain is used to move the machine back until it is again within this hold boundary. This fixed gain method actually provides a higher gain and better position hold than could be achieved with a normal proportional gain loop.

The following graph illustrates position hold loop:

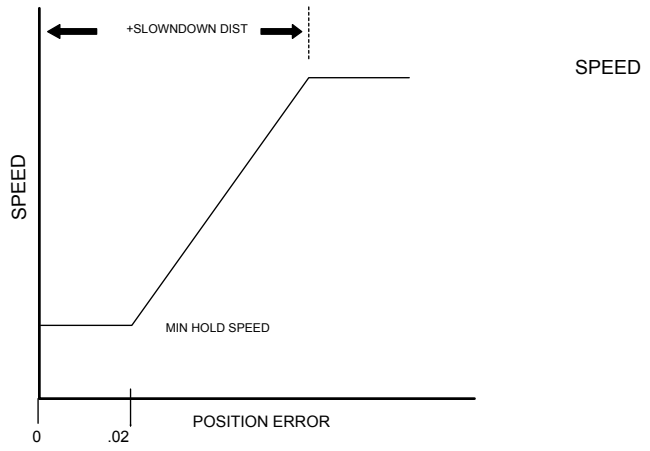

NOTE: At 0 error, the speed would also be o.

SD09- ERROR SPEED MAXIMUM (IPM/MMPM)

This parameter is used to limit the MAXIMUM ERROR SPEED, which can be developed due to large position errors. This helps to prevent oscillation by limiting the violence of the shaking that occurs in unstable systems (with a minimum speed of 20 IPM or 500 MMPM). A good starting point for this value is to set it to one half of the maximum speed set in **SD04- MAXIMUM DRIVE SPEED**.

SD10- RUN SPEED LIMIT (IPM/MMPM, multiple parameter)

This parameter and **SD11- TRAVERSE SPEED LIMIT** are used to limit the speed of the machine to something less than the maximum drive capability. Normally, it is not necessary to limit the speed, since the machine was designed to work with the drive system. However, some older machines cannot travel as fast as the drive capacity without literally shaking themselves apart. In these cases, the RUN SPEED and TRAVERSE SPEED LIMITS are used. The RUN SPEED LIMIT limits the maximum speed during cutting portions of the part program. The TRAVERSE SPEED LIMIT limits the speed during non-cutting traverse moves.

If no limiting is required, set both the RUN SPEED LIMIT and TRAVERSE SPEED LIMIT to the same speed as **SD04- MAXIMUM SPEED**.

SD11- TRAVERSE SPEED LIMIT (IPM/MMPM)

This value acts the same as **SD10- RUN SPEED LIMIT**, but it limits the speed during non-cutting, fast traverse moves. See description for SD10, above.

SD14- GAIN BREAK (encoder counts, multiple parameter)

This parameter may help to improve the cutting accuracy of a system by increasing the gain of the system for small position errors without increasing the overall gain of the system and causing oscillation. The value entered specifies a fixed gain region on either side of the correct (zero error) path where the loop gain of the system is forced. It is entered as encoder counts, not inches or millimeters. Any path error within this region causes a correction to be generated as it is already at the specified number of encoder counts. Errors outside this region are unaffected.

Example: If the system loop gain is set to 2.00 IPM per count:

Error in encoder counts	Correction Speed with GAIN BRK-0	Correction Speed with GAIN BRK-4
0	0.00 IPM	0.00 IPM
1	2.00 IPM	8.00 IPM
2	4.00 IPM	8.00 IPM
3	6.00 IPM	8.00 IPM
4*	8.00 IPM	8.00 IPM
5*	10.00 IPM	10.00 IPM

* After 4 counts, both results are the same with GAIN BREAK set to 4.00.

SD15- ERROR WARNING DISTANCE (IPM/MMPM)

The **1250** constantly monitors the path ERROR WARNING DISTANCE while running a part. The value entered in this parameter may be a positive or negative number. If you enter a positive value and the error exceeds the value set for this parameter, a warning message is displayed along with beeping. This indicates that the machine is not responding to positioning commands and that the part being produced is out of tolerance.

If you enter a negative value and the error exceeds the value set for this parameter, a CYCLE STOP and a warning message is displayed, along with beeping. The display then flashes **WARNING PATH ERROR**. This indicates that the machine is not responding to positioning commands and has stopped.

The value should be large enough that the normal bumps and shakes associated with a cutting machine in a production shop do not cause nuisance tripping of the warning. Its main purpose is to issue a warning when something breaks or is jammed on the machine and causes a large offset from the correct path. It should typically be set around .05 inch or 1.25 mm.

SD16- LOOP GAIN (multiple parameter)

This value is the most critical of all the setup parameters in affecting the machine's performance while cutting a part. The position loop constantly compares the position of the machine to the correct programmed path. Any difference (path error) is multiplied by the LOOP GAIN value. This result is then output to the drives, which causes the machine to move back toward the correct path.

This value should be set to as large a value as possible to give the most accurate part. If it is set too high, however, the machine becomes unstable and oscillates while moving

around the part. Too low a value causes some loss of accuracy in the part. Thus, adjusting this value is a trial and error procedure.

The units for LOOP GAIN are the same as those used for any of the other speed inputs, either IPM or MMPM. The value entered, however, is the correction speed for a path error of approximately .0025 inch or .0625 mm. If the path error is more than .0025 inch or .0625 mm, the correction speed is the number of encoder counts of error multiplied by the LOOP GAIN.

For example, in an INCH OPERATING SYSTEM, if the LOOP GAIN is 2.00 and the PATH ERROR is 5 encoder counts (.0125 inch), the correction speed output to the drive is (2.00 x 5) 10.0 IPM.

SD17- ARC OFF DELAY (seconds)

This time value is only used during plasma cutting. If the ARC ON input signal is removed from the **1250** during a plasma cut, the **1250** automatically issues a CYCLE STOP command, which halts motion. The **1250** then waits for you to press <CYCLE START> before continuing.

The ARC OFF DELAY time provides a delay before the ARC OFF condition is recognized. This permits the machine to keep moving if a part falls out before the cut is completed or if a previous cut path is crossed. If this timer is not provided, the control stops as soon as the ARC ON signal is removed and does not complete the cut path.

For plasma cutting, this value is typically set to 1 or 2 seconds.

If only oxygen/fuel cutting is used, set this value to 0.00.

SD18- SLOWDOWN DISTANCE (inch or millimeter, multiple parameter)

This value sets the deceleration distance used when slowing for a corner in the part program. See the description in SD07 for an explanation of the slowdown parameters.

SD19- HEIGHT SENSOR DISABLE LOOK-AHEAD (inch or millimeter, multiple parameter)

This distance value is only used during plasma cutting operations. It affects the operation of the PLASMA HEIGHT SENSOR DISABLE relay output from the control.

Normally, this relay energizes when the CORNER SLOWDOWN parameter reduces the speed of the machine before going around a corner. SD19 adds an additional condition for causing the HEIGHT SENSOR DISABLE relay to energize by setting a look-ahead distance for disabling the height sensor before the end of cut, or before a PLASMA HEIGHT SENSOR DISABLE auxiliary function in the part program is executed. This is especially useful when the part program contains either a lead-out, or a cross or intersection in the cutting path. Both of these conditions can cause the plasma torch to dive into the plate.

By setting this distance value to some nominal value, it can prevent these problems. Keep the value as small as possible.

In the case of the lead-out, by establishing a standard lead-out length (for example, .25 inches), and setting SD19 to .40 inches, it guarantees that the PLASMA HEIGHT SENSOR is disabled at least .15 inches before the lead-out started, and so it can't follow the part falling out. In the case of the cross or intersect of a previous cut, the part program must

contain the appropriate HEIGHT SENSOR DISABLE code (see PART PROGRAMMING section) at the point of intersection. SD19 then disables the height sensor at the specified distance, before the intersect point, and prevents the torch from diving into the plate.

SD20- X ENC DIST/REV
SD21- Y ENC DIST/REV
SD22- ENC COUNTS/ REV

The X & Y encoder distance per one revolution and the number of encoder counts per one revolution allow for various encoder/rack/pinion combinations to be used with the **1250** control. The **1250** has the ability to use a wide range of encoders.

The value entered in **SD20- X ENC DIST/REV** is the length of travel (inch or millimeter), along the X axis per one revolution of the X axis encoder.

The value entered in **SD21- Y ENC DIST/REV** is the length of travel (inch or millimeter) along the Y axis per one revolution of the Y axis encoder.

SD22- ENC COUNTS/REV affects both the X and Y axis. The value entered is the number of quadrature encoder counts (lines) per one revolution of the encoder.

The **1250** uses the distance per revolution and the counts per revolution parameters while the machine is moving to convert the encoder counts to total inches or millimeters of travel.

SD23- X ENCODER DIR

The quadrature encoders used for position feedback provide both direction and position information. Depending on the mounting of the X axis encoder, the direction information may or may not be correct. (This can be checked by using the SERV01-X/Y DISPLAY function.) If the direction needs to be reversed, press the <+/-> key, which toggles the **NORM/REV** data to the opposite condition. This causes the X axis encoder to count in the correct direction.

SD24- ENCODER DIR

See X axis description (SD23).

SD25- X DRIVE DIR

This parameter is used to reverse the polarity of the X axis drive output signal. Depending on the machine's drive electronics and the interface card in the **1250**, the drive output signal for the X axis sometimes needs to be inverted so that the motion of the machine is correct. Use the jog keys to move the machine in the X axis and check that it moves in the correct direction. If not, press the <+/-> key to toggle the **NORM/REV** values. This reverses the polarity of the X drive output signal.

SD26- Y DRIVE DIR

This parameter is used to reverse the polarity of the Y axis drive output signal. See SD25 for a detailed description.

SD27- PLATE SIDE

This parameter should be set to the position of the plate being cut with respect to the operator's console (left or right). This value is used by the STANDARD SHAPE routines and others to determine repeat movements and initial moves from the corner of the plate. All programs should start at the corner of the plate nearest to the operator's console, since this gives the best view of the plate for aligning the torches.

To change the value, press the <+/-> key to toggle the **LEFT/RIGHT** indication.

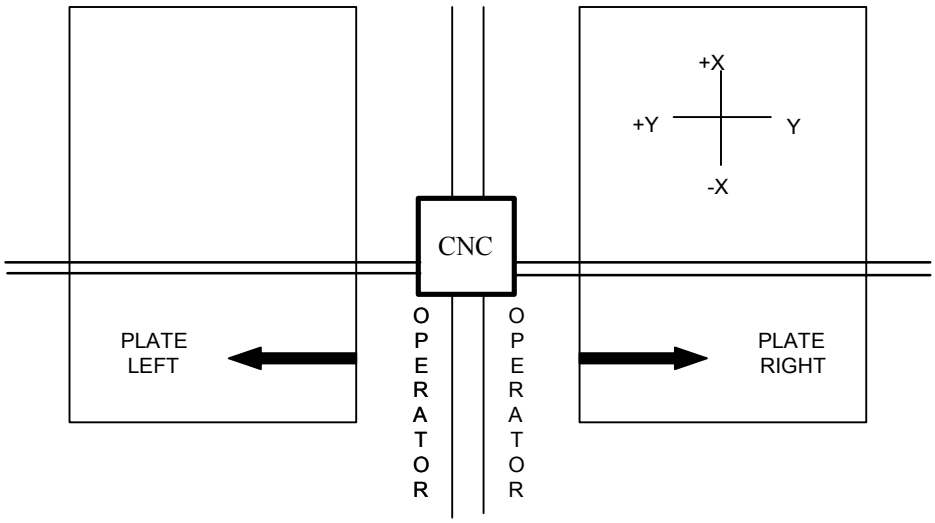

SD28- HEIGHT RELAY (NORM/REV)

Some systems have one of their output relays used as a PLASMA HEIGHT SENSOR DISABLE relay. This relay's contacts are normally connected to the plasma system's height control. When the **1250** slows for a corner, this relay energizes, and causes the PLASMA HEIGHT SENSOR to freeze at the current height. Once the machine has re-accelerated, this relay turns off and allows the PLASMA HEIGHT SENSOR to function normally.

Depending on the plasma system used, the contact must either close or open in order to perform the disable function. If this parameter is set to **NORM**, the output contact is normally open and closes to disable the PLASMA HEIGHT SENSOR. If set to **REV**, the output contact is normally closed and opens to disable the sensor.

Press the <+/-> key to toggle the indicator to select the desired operation.

SD29- SLOWDOWN RADIUS (inch or millimeter, multiple parameter)

This parameter is used by the acceleration/deceleration routine to determine if a certain radius arc can be cut at the current machine speed or if the speed needs to be reduced due to a small radius. When an arc is cut, its radius is compared to this parameter and causes a slowdown proportional to the ratio of the two radii.

This value is typically set to 2 to 3 inches, or 50 to 80 mm.

SD30- MIN RAD SPD (inches or millimeters, multiple parameter)

This speed value is used as the minimum cutting speed for small radii, even if the corner speed is lower. In this way, the corner speed can be adjusted to give the best deceleration to a full corner without the small radii (such as the fill-in blocks created by kerf) running at an unacceptably slow rate. Normal values are between 10 - 30 IPM.

SD31- PLASMA TB1

SD31 displays a prompt for **PLASMA TB1** and is answered by a **YES** or **NO** response. If you respond **NO**, the control uses the standard SD10 setup parameter for both oxygen/fuel and plasma cutting. If you respond **YES**, and the control is set for plasma cutting, the parameters in Overlay Table #1 are used to control the machine.

This allows the SD10 Table #0 parameters to be set for the best oxygen/fuel cutting, and the overlay SERV41 Table #1 parameters to be set for the best plasma cutting. This allows the overlay table to be used even though the part program does not contain any specific codes.

SD32- MIN SLW ANG (degrees, multiple parameters)

This parameter, along with **SD33- MAX SLW ANG**, defines the angle range for the slowdown routine. When a part is run, the change in direction that occurs between data blocks is checked. If the direction of the programmed path changes by more than the **SD33- MAX SLW ANG** (maximum slowdown angle) parameter, the machine performs a full corner slowdown at the intersection of the two blocks.

Similarly, if the change in direction between two data blocks is less than the number of degrees specified by **SD32- MIN SLW ANG** (minimum slowdown angle), the machine runs through the intersection with no slowdown at all. Changes in direction that are between the minimum and maximum values are scaled accordingly. Changes in direction that are close to the minimum value run almost at full speed and as the angle increases toward the maximum value, the machine slows down to a lower speed at the corner.

The typical values for this parameter are 10 degrees for SD32, and 22 degrees for SD33.

SD33- MAX SLW ANG (degrees, multiple parameter)

This parameter sets the maximum boundary angle used by the corner slowdown routines. See SD32 for description.

SD40- X MARKER OFFSET #1 (inches/millimeters)

Parameters SD40, SD41, SD42, SD43, and SD80-95 are used when the configuration of the **1250** supports a plate marking device. When configuration does not support a plate marking device, these parameters can be ignored.

Parameters SD40 and SD41 should be set to the X/Y offset distance between the cutting torch and the marking device. When a part requires marking, a MARKER OFFSET ON command is used to shift the marking device to the X/Y position where the cutting torch was previously located, allowing the marking portion of the program to be dimensioned the same as the cutting moves without having to compensate for the distance between the marker and cutting torch. When the MARKER ON command is issued, the control turns on the marking device.

The control holds position for the time specified by the SD43 parameter and then begins moving along the marking path. If the SD42 parameter is set to 0.00, you can control the speed of the marker using the normal feedrate controls on the machine. If the SD43 parameter is set to a speed other than 0.00, the marker moves at that speed automatically, provided that the machine's feedrate control is set higher than the SD43 marking speed. If the feedrate control is set to a lower speed, it overrides the SD43 speed and runs at the lower value.

Parameters SD80 - SD95 are offsets that may be used on machines that have multiple plasma and oxygen/fuel torches on the same station. These additional offsets allow the marker on one torch to be used with another torch simply by programming the appropriate **T** field vale.

See **SD80- PROGRAMMABLE OFFSETS** and the PART PROGRAMMING section for more information.

SD41- Y MARKER OFFSET #1 (inches/millimeters)

Marker offset dimension in the Y axis. See SD40, above.

SD42- MARKING SPEED (IPM/MMPM)

This parameter sets the speed to be used for the plate marking device when the marker is turned on. If this parameter is set to 0.00, you can set the marking speed manually using the normal feedrate controls on the machine.

SD43- MARKER DELAY (seconds)

This timer is used to delay the start of motion when the plate marking device is turned on. This delay can be used to allow the marking head to be lowered into position or it can be used to hold the machine in position for a center punching operation.

SD45- DEFAULT DWELL (seconds, multiple parameter)

This value sets the system default for the dwell time used when a DWELL auxiliary function code is included in a part program. This value is used unless the part program establishes a new dwell time.

SD46- MIN OFF DELAY (seconds, multiple parameter)

This delay time causes a dwell after any control output is turned off. It operates on all outputs (cutting oxygen, etc.) and is in addition to any specific **OFF** delays for a particular operation, such as the oxygen/fuel BLEED-OFF TIME.

This value is typically set to 0 or 1 seconds.

SD49- START DELAY (seconds, multiple parameter)

This timer is used to delay motion along the cut path when any of the tools on the machine are started or one of the stations lowered. For example, when the plasma torch is enabled, this delay prevents the plasma arc from firing for the specified time, which allows the station to reach its cutting position.

SD50- SERIAL DEFINITION

This parameter selects the various program and communication characteristics of the serial RS-232 port. The value is a four-digit number, where each digit controls a specific function. If any digit is set to zero (0), you are prompted to make the selection when a serial operation is performed.

D1	D2	D3	D4

D1 sets the communication protocol. The valid choices for **D1** are taken from the following list:

0	The operator is prompted for protocol
1	RTS/CTS hardware protocol
2	XON/XOFF software protocol
3	Not used
4	Not used
5	PTAPE 1. Spooling tape reader protocol
6	CLINK 1. CAD communication link.

See the SERIAL COMMUNICATIONS section for more information.

D2 selects the programming language. The valid choices for **D2** are taken from the following list:

0	The operator is prompted for program type
1	Standard 1250 Word Address
2	Standard 1250 ESSI
3	Not for normal use. Internal test only.
4	Special Word Address #1
5	Special Word Address #2
6	Special Word Address #3
7	Special ESSI

See the PART PROGRAMMING section for more information.

D3 selects the character format specification. The valid choices for **D3** are taken from the following list:

0	The operator is prompted for character format
1	NP7D: ASCII, no parity, 7 data bits
2	NP8D: ASCII, no parity, 8 data bits
3	EP7D: ASCII, even parity, 7 data bits
4	EP8D: ASCII, even parity, 8 data bits
5	OP7D: ASCII, odd parity, 7 data bits

6 OP8D: ASCII, odd parity, 8 data bits

7 EIA: RS-244, odd parity format

D4 selects the baud rate. The valid choices for **D4** are taken from the following list:

0 The operator is prompted for the baud rate

1 1110 baud

2 300 baud

3 600 baud

4 1200 baud

5 2400 baud

6 4800 baud

7 9600 baud

SD51- PRGM FORMAT

Each digit in this eight-digit number is used to select a particular option for the programming formats of RS-232 or paper tape loaded programs. The programming description described in the PART PROGRAMMING section only describes the standard format used the by the **1250**, not all the various options. Most customers can use the standard Word Address or ESSI formats as is and do not require the special features set by this variable. In these cases, set this parameter to 00000000.

Possible values for each digit are 0, 1, 2, 3, 4, 5, 6, 7, 8, 9, A, B, C, D, E, and F. To enter a number, just press the value on the keypad. To enter A - F, use a two-key combination of the <SHF> key and then one of the numbers on the keypad:

Press <SHF><0> to enter a value of **A**

Press <SHF><1> to enter a value of **B**

Press <SHF><2> to enter a value of **C**

Press <SHF><3> to enter a value of **D**

Press <SHF><4> to enter a value of **E**

Press <SHF><5> to enter a value of **F**

The following pages describe the PROGRAM FORMAT.

PROGRAM FORMAT

D1	D2	D3	D4	D5	D6	D7	D8

D1 through **D3** are not used, and should be set to 0.

D4 affects all program loaded by any WADR3 or ESSI1 format. It sets the default for a decimal shift of the programmable kerf and/or programmable feedrate. The valid choices for **D4** are taken from the following list:

0	No decimal shift of programmed kerf or programmed feedrate values
1	Decimal shift left set to 1 for programmed kerf values
2	Decimal shift left set to 2 for programmed kerf value
3	Decimal shift left set to 3 for programmed kerf value
4	Decimal shift left set to 1 for programmed feedrate value
5	Decimal shift left set to 1 for programmed kerf value and 1 for feedrate value
6	Decimal shift left set to 2 for programmed kerf value and 1 for feedrate value
7	Decimal shift left set to 3 for programmed kerf value and 1 for feedrate value
8	Decimal shift left set to 2 for programmed feedrate value
9	Decimal shift left set to 1 for programmed kerf value and 2 for feedrate value
A	Decimal shift left set to 2 for programmed kerf value and 2 for feedrate value
B	Decimal shift left set to 3 for programmed kerf value and 2 for feedrate value
C	Decimal shift left set to 3 for programmed feedrate value
D	Decimal shift left set to 1 for programmed kerf value and 3 for feedrate value
E	Decimal shift left set to 2 for programmed kerf value and 3 for feedrate value
F	Decimal shift left set to 3 for programmed kerf value and 3 for feedrate value

D5 affects all programs loaded by any WADR3 or ESSI1 format. These special formats allow various conversions to be performed on the program being loaded to comply with the standard programming. This digit allows the use of the CUSTOM AUXILIARY FUNCTION CODE TABLE (described in SERV70 of this section) and also allows the use of an implied decimal shift.

Setting the IMPLIED DECIMAL SHIFT allows the **1250** to read tapes that are programmed with an implied decimal point in the X, Y, I, and J dimensions. For example, some controls program a 2-inch dimension as X200. This would normally be interpreted as a 200 inch move. The IMPLIED DECIMAL SHIFT function allows a two-digit shift to the left to be added to the number so it is correctly loaded as 2.00 inches. Similarly, some programs are loaded in 1/10 scale. A decimal shift right of 1 causes these programs to be cut correctly.

The valid choices for **D5** are taken from the following list:

0	Neither decimal shift nor auxiliary function code table is enabled
1	Auxiliary function code table is enabled
2	Decimal shift left is set to 1
3	Decimal shift left is set to 1 and auxiliary function code table is enabled
4	Decimal shift left is set to 2
5	Decimal shift left is set to 2 and auxiliary function code table is enabled
6	Decimal shift left is set to 3
7	Decimal shift left is set to 3 and auxiliary function code table is enabled
8	Decimal shift left is set to 4
9	Decimal shift left is set to 4 and auxiliary function code table is enabled
A	Decimal shift right is set to 1
B	Decimal shift right is set to 1 and auxiliary function code table is enabled
C	Decimal shift right is set to 2
D	Decimal shift right is set to 2 and auxiliary function code table is enabled
E	Decimal shift right is set to 3
F	Decimal shift right is set to 3 and auxiliary function code table is enabled

D6 affects all programs loaded by any WADR3 or ESSI1 format. This digit allows the axis definitions of the incoming program to be changed to match the standard X/Y axis definitions used by the **1250**.

D6 also allows you to force an auxiliary code priority. In Word Address programming, it is possible to include auxiliary functions (M and G codes) in the same block as an X/Y move or an arc. The **1250** follows the RS-274 specifications, which specifies certain functions should be executed before the movement, while others are done after the movement programmed in the same block is complete. However, some other NC controls assume that all auxiliary functions are done before any movement when they are contained in the same block. So that these programs can be read without re-programming, you can set **D6** to force all auxiliary codes to operate before the movement in the same block.

The valid choices for **D6** are taken from the following list:

0	+X --> +X and +Y --> +Y (standard)

1	+X --> +X and +Y --> -Y
2	+X --> -X and +Y --> +Y
3	+X --> -X and +Y --> -Y
4	+X --> +Y and +Y --> +X
5	+X --> -Y and +Y --> +X
6	+X --> +Y and +Y --> -X
7	+X --> -Y and +Y --> -X
8	+X --> +X and +Y --> +Y and all auxiliary function codes are forced to high priority
9	+X --> +X and +Y --> -Y and all auxiliary function codes are forced to high priority
A	+X --> -X and +Y --> +Y and all auxiliary function codes are forced to high priority
B	+X --> -X and +Y --> -Y and all auxiliary function codes are forced to high priority
C	+X --> +Y and +Y --> +X and all auxiliary function codes are forced to high priority
D	+X --> -Y and +Y --> +X and all auxiliary function codes are forced to high priority
E	+X --> +Y and +Y --> -X and all auxiliary function codes are forced to high priority
F	+X --> -Y and +Y --> -X and all auxiliary function codes are forced to high priority

D7 affects all programs loaded by any WADR3 or ESSI1 format when they are programmed in absolute. (Incremental programs are not affected.) For absolute programs, this digit establishes how the I and J arc coordinates are defined. Set this digit to an even number to make the I/J signs the same type as the X/Y dimensions. Therefore, on absolute programs, the I/J also must be in absolute. Set this digit to an odd number to force the I/J dimensions to be in incremental even if the program is in absolute. For incremental programs, the I/J is always incremental.

D7 also selects whether or not the **1250** should use the SPECIAL END OF PROGRAM ASCII SEQUENCE set in **SD52**. (SD51 has a bit defined that allows the END OF PROGRAM string function to be included in WADR3, ESSI1 or both types of special programs. Setting the bit off ignores the special string and only looks for the normal end of program codes.)

The valid choices for **D7** are taken from the following list:

0	Default conditions
1	Sets I/J dimensions for INCREMENTAL even if the program is in ABSOLUTE
4	Special END-OF-PROGRAM on WADR3 loads only enabled
5	Special END-OF-PROGRAM on WADR3 loads only enabled and I/J dimensions for INCREMENTAL
8	Special END-OF-PROGRAM on ESSI1 loads only enabled

9	Special END-OF-PROGRAM on ESSI1 loads only enabled and I/J dimensions for INCREMENTAL
C	Special END-OF-PROGRAM on WADR3 & ESSI1 loads enabled
D	Special END-OF-PROGRAM on WADR3 & ESSI1 loads enabled and I/J dimensions for INCREMENTAL

D8 affects all programs loaded by any WADR or ESSI format, and sets the default for program dimensions as either absolute or incremental. This causes any program that does not have a code declaring it as either absolute or incremental to be assumed as the type set by this digit.

Programs that contain the correct auxiliary code for absolute or incremental are loaded according to that code regardless of this digit.

The valid choices for **D8** are taken from the following list:

0	Incremental dimensions used as default
1	Absolute dimensions used as default

SD52- SPECIAL END OF PROGRAM

This parameter allows up to four characters to be entered (in ASCII as 8 digits), which specify a four-character string that can act as the end of a Word Address or ESSI program. This feature aids in reading tapes from other controls that do not provide a normal auxiliary function (M, G, or ESSI code) at the end of a program. For example, some controls use a **%** sign as the end-of-program. If the **%** is the end of program code, the ASCII value of the **%** is **25**. The END OF PROGRAM value would be equal to **EOP-25000000**.

If the END OF PROGRAM code is **END**, then **EOP- 454E4400** because in ASCII:

E =	45
N =	4E
D =	44

ASCII CODES

Character	Hex	Character	Hex	Character	Hex
NULL	00	+	2B	V	56
SOH	01	,	2C	W	57
STX	02	-	2D	X	58
ETX	03	.	2E	Y	59
EOT	04	/	2F	Z	5A
ENQ	05	0	30	[	5B
ACK	06	1	31	\	5C
BEL	07	2	32	]	5D
BS	08	3	33	^	5E
HT	09	4	34	_	5F
LF	0A	5	35	`	60
VT	0B	6	36	a	61
FF	0C	7	37	b	62
CR	0D	8	38	c	63
SO	0E	9	39	d	64
SI	0F	:	3A	e	65
DLE	10	;	3B	f	66
DC1	11 (XON)	<	3C	g	67
DC2	12 (RON)	-	3D	h	68
DC3	13 (XOFF)	>	3E	i	69
DC4	14 (ROFF)	?	3F	j	6A
NAK	15	@	40	k	6B
SYN	16	A	41	l	6C
ETB	17	B	42	m	6D
CAN	18	C	43	n	6E
EM	19	D	44	o	6F
SUB	1A	E	45	p	70
ESC	1B	F	46	q	71
FS	1C	G	47	r	72
GS	1D	H	48	s	73
RS	1E	I	49	t	74
US	1F	J	4A	u	75
SP	20	K	4B	v	76
!	21	L	4C	w	77
‘	22	M	4D	x	78
#	23	N	4E	y	79
$	24	O	4F	z	7A
%	25	P	50	{	7B
&	26	Q	51	|	7C
‘	27	R	52	}	7D
(	28	S	53	~	7E
)	29	T	54	DEL	7F
*	2A	U	55		

SD53- FILE EXTEN

This parameter gives the **1250** the ability to add a fixed file extension of any type to part programs. Files that are tagged with **CNC**, **TXT**, or any other valid file extension can be loaded from the **1250** disk drive or serial port. Programs that are stored to the **1250** disk drive or out the serial port have this file extension added to the program number.

This parameter allows up to four characters to be entered (in ASCII as 8 digits), which can act as the file extension. For example, if the desired file extension of all files that are to be loaded from the floppy and stored to the floppy is **.CNC**, then **SD53- FILE EXTEN- 434E4300**, because in ASCII:

C = 4E
N = 4E
C = 43

The **1250** adds the . (period) automatically.

If the desired file extension of all files that are to be loaded from the floppy and stored to the floppy is **.TXT**, then **SD53- FILE EXTEN- 54585400**, because in ASCII:

T = 54
X = 58
T = 54

and the **1250** add the . (period) automatically.

See the ASCII Code Table in this section for a list of characters and their ASCII values.

NOTE: Although four characters may be entered, the MS-DOS operating system only allows a three-character extension. Other operating systems allow more than three characters.

SD60- OPERATING SYS

This parameter selects between an INCH based operating system and a METRIC based operating system. Press <+/-> to toggle the selection.

If an INCH operating system is selected:

- All dimensions and distances for DISPLAYS and entered values are in inches.
- All SPEED DISPLAYS and entries are in inches per minute (IPM).
- All STANDARD SHAPE programs prompt for inch part dimensions.

If a METRIC operating system is selected:

- All dimensions and distances for DISPLAYS and entered data are in millimeters.
- All SPEED DISPLAYS and entered values are in millimeters per minute (MMPM).
- All STANDARD SHAPE programs prompt for millimeter part dimensions.

CAUTION: Although the **1250** switches from inches to millimeters, changing from one to another does not convert the dimensions in the program. The **1250** setup parameters, as well as programs stored in the control, are not re-adjusted to inches or millimeters.

SD61- SYSTEM CONFIGURATION #1

This parameter is used to select the desired system operation for the machine it is being installed on. Set SD61 to **22** for proper operation.

SD62- SYSTEM CONFIGURATION #2

This secondary system configuration flag is used to selected the desired system operation for the machine it is being installed on.

D1	D2	D3	D4	D5	D6	D7	D8

D1 is currently unused and should be set to **0**.

D2 selects PROGRAMMABLE FEEDRATE, DIGITAL FEEDRATE, PROGRAMMABLE KERF, and HOME LIMIT SWITCH ENABLE.

The valid choices for **D2** are taken from the following list:

0	No DIGITAL FEEDRATE or PROGRAMMABLE FEEDRATE
2	HOME LIMIT SWITCHES enabled
4	DIGITAL FEEDRATE
6	DIGITAL FEEDRATE and HOME LIMIT SWITCHES enabled
8	PROGRAMMABLE FEEDRATE (feature must also be enabled)
A	PROGRAMMABLE FEEDRATE and HOME LIMIT SWITCHES
C	DIGITAL FEEDRATE and PROGRAMMABLE FEEDRATE
E	PROGRAMMABLE KERF, FEEDRATE and HOME LIMIT SWITCHES

D3 manipulates the default condition for the X & Y home index switches and the X & Y home index inputs from the encoders. This digit can also be used to bypass a particular input by setting the invert bit so that the input is detected as being on when there is no device actually plugged in. This is useful where a machine has only home switches but no home index inputs from the encoders.

SD96 (X offset from table 1 to X limit switch) and **SD97** (Y offset from table 1 to Y home limit switch) are used to establish the (0,0) position of the machine at a fixed offset from the home switch/index locations. This allows the switches to be located anywhere in the machine's travel, but allow the (0,0) position to be established at a logical point for the actual cutting process.

The valid choices for **D3** are taken from the following list:

0	Default
1	Y index input inverted
2	X index input inverted
3	X & Y index input inverted
4	Y home switch input inverted
5	Y home switch input inverted and Y index input inverted
6	Y home switch input inverted and X index input inverted
7	Y home switch input inverted and X & Y index input inverted
8	X home switch input inverted
9	X home switch input inverted and Y index input inverted
A	X home switch input inverted and X index input inverted
B	X home switch input inverted and X & Y index input inverted
C	X & Y home switch input inverted
D	X & Y home switch input inverted and Y index input inverted
E	X & Y home switch input inverted and X index input inverted
F	X & Y home switch input inverted and X & Y index input inverted

D4 sets the search direction for the machine once the operator has selected the **FNC16-SET HOME** function. The valid choices for **D4** are taken from the following list:

0	Search begins in +Y and then in +X direction
4	Y home search direction begins in the -Y direction
8	X home search direction begins in the -X direction
C	X & Y search begin in the -X & -Y direction

D5 is undefined and should be set to **0**.

D6 is used to re-configure the jog directions to match the machine axis and disable the latched jog function. The valid choices for **D6** are taken from the following list:

0	+X --> +X and +Y --> +Y (standard)
1	+X --> +X and +Y --> -Y
2	+X --> -X and +Y --> +Y
3	+X --> -X and +Y --> -Y
4	+X --> +Y and +Y --> +X
5	+X --> -Y and +Y --> +X
6	+X --> +Y and +Y --> -X
7	+X --> -Y and +Y --> -X

8	Disable the latched jog function
9	+X --> +X and +Y --> -Y & disable latched jog function
A	+X --> -X and +Y --> +Y & disable latched jog function
B	+X --> -X and +Y --> -Y & disable latched jog function
C	+X --> +Y and +Y --> +X & disable latched jog function
D	+X --> -Y and +Y --> +X & disable latched jog function
E	+X --> +Y and +Y --> -X & disable latched jog function
F	+X --> -Y and +Y --> -X & disable latched jog function

D7 selects which set of jog keys are used in the SERIES 1000 Tracer / NC controls. The valid choices for **D7** are as follows:

0	Jog from NC keypad in NC RUN
1	Jog from NC keypad in SERIES 1000 keypads in NC RUN

D8 affects the acceleration time of the **1250**, by setting values for SPEED-DEPENDENT ACCELERATION, TEACHABLE PREHEAT TIME, and pierce hold times.

For example, if **SD03** (acceleration time) is set to 1.5 seconds, **SD04** (maximum drive speed) is set to 150 IPM, cut speed is set to 150, and SPEED-DEPENDENT ACCELERATION is set to **1** in **D8**, the machine accelerates to 150 IPM in 1.5 seconds. When the cut speed is reduced to 75 IPM, the machine accelerates to cutting speed in .75 seconds.

If you set SPEED-DEPENDENT ACCELERATION to **0** in **D8**, this provides acceleration to cut speed based solely on the value of **SD03** (acceleration time).

Also, the **1250** has the ability to learn a preheat time, when set in **D8**. Use the <CYCLE START> key to extend or shorten the preheat time. The new time is remembered and used on all subsequent pierces.

The valid choices for **D8** are taken from the following list:

0	Normal time based acceleration
1	Speed-dependent acceleration; no teachable preheat time
2	Teachable preheat time; normal time dependent acceleration
3	Teachable preheat time; speed-dependent acceleration
4	Plasma pierce hod time enable
5	Plasma pierce hold time enable; speed-dependent acceleration
6	Plasma pierce hold time enable; teachable preheat time
7	Plasma pierce hold time enable; teachable preheat time; speed-dependent acceleration
8	Oxygen/fuel pierce hold time enable
9	Oxygen/fuel pierce hold time enable; speed-dependent acceleration
A	Oxygen/fuel pierce hold time enable; teachable preheat time

B	Oxygen fuel pierce hold time enable; teachable preheat time; speed-dependent acceleration
C	Oxygen/plasma pierce hold time enable
D	Oxygen/plasma pierce hold time enable; speed-dependent acceleration
E	Oxygen/plasma pierce hold time enable; teachable preheat time
F	Oxygen/plasma pierce hold time enable; teachable preheat time; speed-dependent acceleration

SD68- SPEED RANGE (inches or millimeters)

This parameter allows the range of speed displays to be shifted to match the requirements for different types of machines. For example, water jet machines usually run very slowly, so the range can be shifted down to allow for better resolution. High speed plasma, glass cutters, and other applications may require speeds above the 1310 IPM value (with a reduced resolution).

NOTE: This parameter, like **SD60** (inch or metric operating system), must be set before any other parameters are entered.

Set SD 68 to 4 to select the normal range. The following selections are available:

SD68	Maximum Speed IPM	Maximum Speed MMPM	Resolution IPM	Resolution MMPM
0	81.9175	2047	.0025	.0625
1	163.835	4095	.005	.125
2	327.67	8191	.01	.25
3	655.34	16383	.02	.5
4	1310.68	32767	.04	1
5	2621.36	65535	.08	2
6	5242.76	131068	.16	4
7	10485.44	262136	.32	8

The normal setting is **4**.

SD69- LANGUAGE SEL.

This parameter allows one alternate language to be selected. The language feature must first be enabled and EPROM #3 must be replaced with an EPROM having the appropriate language.

The valid choices for **SD69** are taken from the following list:

0	English
1	German
2	French
3	Finnish
4	Italian
5	Spanish
6	Swedish
7	Dutch
8	Portuguese

SD70- KNIFE DIA. (inches or millimeters)

This parameter is for the special swivel knife compensation routine, which modifies the cut path to produce sharp corners rather than the radiused corners caused by the knife offset. If this feature is installed in the control, this parameter should be set to twice the offset distance from the center of rotation to the knife point. This is the same as the diameter of the circle that would result if the knife was rotated 360 degrees.

SD71- KNIFE BP ANGLE (degrees)

This parameter is also used with the special knife compensation option. It sets the minimum change in direction that causes the special knife processing to take effect. For small changes in direction, the path is unaffected. If a sharp corner (greater than this parameter value) is found, however, the path is modified so that a sharp corner is actually cut.

SD80 - SD95 PROGRAMMABLE OFFSETS (inches or millimeters)

PROGRAMMABLE OFFSETS can be used with multiple plasma and/or oxygen/fuel torches that may or may not have multiple markers mounted on the same station. These additional offsets allow the marker on one torch to be used with another torch simply by programming the appropriate **T** field value.

In **1250** Word Address programming language, programmable offset values are defined using a **T** field in a program block with an **M71** (MARKER OFFSET ON) function code. In **1250** ESSI programming language, programmable offset values are defined using a + field with an **11** (MARKER OFFSET ON) function code.

For example, in Word Address programming format **M71 T4** and in ESSI programming format **11+4** both define MARKER #1 OFFSET ON, and then uses the values in SD86 (XOFST4) and SD87 (YOFST4) for the offset move.

NOTE: The **1250** sets the following parameters equal to each other:

SD40 X MARKER OFFSET and **SD80 X OFFSET #1**
SD41 Y MARKER OFFSET and **SD81 Y OFFSET #**1
SD47 X MARKER OFFSET and **SD82 X OFFSET #2**
SD48 Y MARKER OFFSET and **SD83 Y OFFSET #2**

See S**D40** for additional information on markers and marker offsets.

The PROGRAMMABLE OFFSETS are as follows:

T Value	Offsets Used
1	SD80 XOFST1 SD81 YOFST1
2	SD82 XOFST2 SD83 YOFST2
3	SD84 XOFST3 SD85 YOFST3
4	SD86 XOFST4 SD87 YOFST4
5	SD88 XOFST5 SD89 YOFST5
6	SD90 XOFST6 SD91 YOFST6
7	SD92 XOFST7 SD93 YOFST7
8	SD94 XOFST8 SD95 YOFST8

SD96- HOME INDEX SWITCH (inches or millimeters)

This parameter is the distance from the X HOME INDEX SWITCH to cutting table #1 home position in the X axis.

SD97- Y HOME INDEX SWITCH (inches or millimeters)

This parameter is the distance from the Y HOME INDEX SWITCH to cutting table #1 home position in the Y axis.

MULTIPLE SETUP PARAMETER TABLES

Due to the different types of cutting tools that may be included on the same machine (router, water jet, plasma, etc.), the setup parameters need to be set differently for each type of tool. The **1250** has the ability to do this and get optimum performance out of the tool being run.

SERVICE MODE 10, SYSTEM DATA TABLE, has four additional overly tables that are selectable by a **G** code followed by a **T** code with a select number in the part program (Word Address). Each table can be set up to provide optimum performance for a particular tool and then called by the program before the cutting begins. The overlay tables do not contain the entire list of setup variables since many of them are common for all cutting tools (encoder directions, maximum drive speed, etc.).

The parameters that are contained in the overlay tables are:

SD03- ACCELERATION TIME
SD07- CORNER SPEED
SD10- RUN SPEED LIMIT
SD14- GAIN BREAK
SD16- LOOP GAIN
SD18- SLOWDOWN DISTANCE
SD19- HEIGHT SENSOR DISABLE
SD29- SLOWDOWN RADIUS
SD30- MIN RAD SPD
SD32- MIN SLW ANG
SD33- MAX SLW ANG
SD45- DEFAULT DWELL TIME
SD46- MINIMUM OFF TIME
SD49- START DELAY TIME

When a part program is running, the parameters from the selected table are copied into a running parameter area that is used to run the part program. When a part program is started, the system defaults to Table #0, which is set up by the normal **SERV10** procedure. If no table select codes are contained in the part program, the system runs using the **SERV10** parameters. To switch to a different table, the program must contain one of the following data blocks as a separate line in the program.

G46 T1 (Selects overlay table #1)
G46 T2 (Selects overlay table #2)
G46 T3 (Selects overlay table #3)
G46 T4 (Selects overlay table #4)
G46 T0 (Selects standard SERV10 table)

NOTE: **G46** can be swapped to any other **M** or **G** code desired by using CUSTOM AUXILIARY FUNCTION CODE CONVERSION feature available with WADR3. The number following the T word must be an integer (0 - 4) or it defaults to the standard Table #0.

The part program can contain any number of table select functions. This allows customizing one table for high speed cutting on large data blocks and another for intricate portions of the program. Also, including the RUN SPEED LIMIT parameter allows the maximum cutting speed of the part to be limited so that it does not exceed the

capacity of the tool. (This helps to prevent router bit breaks by limiting the feedrate to a safe range.)

The TRAVERSE SPEED LIMIT is not table-selectable, since there is no cutting process running during traverse moves.

The setup procedure for the tables is similar to the standard **SERV10** procedure.

- **SERV10** sets up the non-overlaid parameters and the Table #0 entries of the overlaid ones. When these parameters are entered, the display shows **SDxx-nnnnnnnn**. For example, **SD03- ACCEL TIME**
- **SERV41** sets up overlay Table #1 parameters. The entry procedures are the same, however, the readout displays **1-xx- nnnnnnnn** to show that Table #1 is being accessed. For example, **1-03- ACCEL TIME**
- **SERV42** sets up overlay Table #2 parameters. The entry procedures are the same, however, the readout displays **2-xx- nnnnnnnn** to show that Table #2 is being accessed. For example, **2-03- ACCEL TIME**
- **SERV43** sets up overlay Table #3 parameters. The entry procedures are the same, however, the readout displays **3-xx- nnnnnnnn** to show that Table #3 is being accessed. For example, **3-03- ACCEL TIME**
- **SERV44** sets up overlay Table #4 parameters. The entry procedures are the same, however, the readout displays **4-xx- nnnnnnnn** to show that Table #4 is being accessed. For example, **4-03- ACCEL TIME**
- When **SERV40** is first selected, the control displays **CURRENT TABLE- X** where **X** is a digit 0 - 4. This is the index of the table that is currently running the machine. To adjust the parameters in this table, press <ENTER>. That table is accessed, and you may change the parameters.

  To force the selection of a particular table for testing, enter a new index number (0 - 4) when the **CURRENT TABLE** display is showing. The new table is copied into the running table area and immediately affects the operation of the machine. Then press <ENTER> to access and adjust the new table.

Parameters that are not in the overlay tables can only be accessed and adjusted by using the **SERV10** procedure. Note that if **SERV40** is used to access Table #0, only the overlaid parameters are displayed so that Table #0 appears the same as 1 - 4. Accessing Table #0 through **SERV10** allows all the parameters to be accessed.

Due to the additional memory required to store the multiple setup tables, there is not sufficient RAM available to keep all the parameters available for access at any time. Therefore, when the machine is not running, the RAM used to store the multiple tables is re-used for other system purposes.

The promoters are recalled from non-volatile memory back to the operating RAM when a part is selected for running. The parameters are also recalled to operating RAM when you press <RECYCLE>. Therefore, the parameters can only be entered or displayed either in the RECYCLE state, or after a part has been selected for running and the kerf, acceleration, deceleration, and part rotation is complete. The parameters can be adjusted all the time a part is running regardless of whether the machine is moving or stopped.

NOTE: If you adjust the parameters, but the new values are not stored using the **SERV97** procedure before you press <RECYCLE>, the new values are replaced by the previously stored data that is recalled from non-volatile memory. Similarly, if you adjust the parameters in the RECYCLE state, and then a part is selected for running without storing the values first, they are also returned to their previous values.

SERV11- DSPY VAR

This function is an important tool in checking the control's various operating and diagnostic displays. It displays many of the values used in the position loop calculations. It also shows various hardware locations, which reduces the need for external test equipment when looking for a problem.

SYSTEM VARIABLE DISPLAY

The SYSTEM VARIABLE DISPLAY function allows many internal data values to be displayed for troubleshooting and diagnostic purposes. When you select **SERV11** or **DSPY11**, a second menu is presented. Select the desired display from that menu, either by scrolling or entering the specific display number.

Once the mode is selected, the display changes to **V01-X DRIVE**, which is the first variable in the list. Select the desired variable by scrolling or by directly entering the two-digit number of the particular variable. Once the correct one is displayed, press <ENTER>. This causes the current value for that variable to be displayed.

V01- X DRIVE

Displays the X drive output from the position loop as a percentage from 0 to ± 100%. When you control machine speed with the <SPEED> key, a 100% reading indicates that the position loop is commanding 100% of the <SPEED> key setting. If a traverse move is being performed, the 100% value indicates 100% of the maximum speed of the machine as entered for **SD04**.

This display is useful when the machine is not running at the correct speed. If the feedrate shown for **SERV03- FEEDRATE** is correct, and this display shows that the position loop is commanding 100% of the current feedrate, it indicates the machine should be running at the feedrate speed. If it is running slower, it indicates a mechanical or electrical problem, usually outside of the **1250**.

V02- XDAOUT

This display shows the actual bit value being sent to the X axis D/A converter. Since a ten-bit converter is used in the **1250**, a displayed value of **03FF** indicates the full 100% bit value is being sent to the converter. A negative output has an **8** in the first digit (**83FF**). The D/A bit value is determined by multiplying the X drive value (**V01**) by the speed calibration factor for the X axis.

V03- X ABS. (inches or millimeters)

This function shows the same data as **SERV01**: the current X position value. It is displayed with four decimal places (.0000) for inch systems and 3 decimal places (.000) for metric systems.

V04- X ENC.

This function shows the current X position value as actual input encoder counts.

The equation used to calculate the X position based on incoming encoder counts and the X encoder scaling value (**SD20**) is:

$$\text{INPUT ENCODER COUNTS (V04)} \times \frac{\text{ENCODER DIST/REV (SD20)}}{\text{4 X ENCODER LINE/REV (SD22)}} = \text{ABSOLUTE POSITION (V03)}$$

V05- X ERROR (inches or millimeters)

When the **1250** is doing a line program block, this display shows the X distance from the correct path. If inaccurate parts are being cut, use displays **V05**, **V15**, and **V20** to prove whether the problem is mechanical or is due to the **1250** position loop.

While a part is being cut (or test run), check the X ERROR and Y ERROR (**V15**) at various points along the part while a line is being cut and **V20** during arcs. If the error is very small or 0, it indicates that the **1250** is functioning correctly, and that the problem is mechanical. This could be caused by a loose encoder bracket or torch holder, or backlash in the drive system.

If the display shows a large error, it indicates that the **1250** knows that the path is incorrect, but is unable to correct for it. This can still be caused by a mechanical problem, but is usually due to an electrical problem with either the drive system electronics or the **1250** interface card. Another possible reason for large errors while cutting a part is that the LOOP GAIN (**SD16**) is set too low, which prevents the error from being corrected.

V06- XERSCL

This displays the speed percentage being commanded after the path error has been scaled by the LOOP GAIN. This display works for either lines or arcs.

For example, assume a part is being cut, and the <SPEED> key is set to 20.00 IPM. The maximum speed at that point would be 20 IPM, which would be 100% speed. If this display showed 25%, it indicates that a speed of 5 IPM (25% of 20 IPM) is being commanded due to the error in the X axis.

V07- X HOME

This displays the distance from the HOME ALIGNMENT REFERENCE POSITION in the X axis.

V11- Y DRIVE

See **V01** (X DRIVE) for description.

V12- YDAOUT

See **V02** (XDAOUT) for description.

V13- Y ABS

See **V03** (X ABS) for description.

V14- Y ENC

See **V04** (X ENC) for description.

V15- YERROR

See **V05** (XERROR) for description.

V16- YERSCL

See **V06** (XERSCL) for description.

V17- Y HOME

Displays the distance from the HOME ALIGNMENT REFERENCE POSITION in the Y axis.

V20- RADERR (inches or millimeters)

While an arc program block is being run, this shows the path error from the correct arc radius. A positive value indicates that the machine is outside the correct radius. Negative values indicate that the error is inside the correct radius.

This value can be used in the same ways as the X ERROR and Y ERROR displays described in **V05** to determine the cause if a part is inaccurate. This display shows the path error while running an arc data block. See **V05** for details on possible causes.

V21- RADSCL

This value also pertains to running arc blocks and shows the commanded speed percentage after the LOOP GAIN has scaled any radius error (as displayed in **V20**). See **V06** for a description of this type of display.

Once this value is calculated, it is divided between the XERSCL (V06) and YERSCL (V16) values, depending on the position of the machine along the arc.

VARIABLES 22-49

These variables are for testing purposes only, and are not needed during normal installation and servicing.

V22- ENDDST End-point distance

V23- ARCBND Arc end-point boundary distance
V30- ACCSCL Acceleration/deceleration scale value
V40- PRETIME Displays preheat timer
V41- ARCTIME Displays ARC ON delay timer
V42- BLETME Displays BLEED-OFF timer
V43- MRKTME Displays MARKER ON delay timer

V50- BP INPUT

This display shows the current state of the eight signal inputs from the interface card and main card. The data are displayed as an eight-bit binary value. **1** means that the input is on, and **0** means that the input is off. BP INPT = 00000000:

0	0	0	0	0	0	0	0
1 for cut/tool on sense	X Home Index / switch input	Y Home Index / switch input	Not used	1 for Plasma select	Non-vol data bit	J5	J4
1 for E-STOP	1 for E-STOP	1 for E-STOP					

V54- XCNTR

Shows the eight-bit hexadecimal value of X axis encoder counter. Can be used to check encoder input circuitry by making sure counter counts smoothly when encoder is being turned.

V55- YCNTR

Show the eight-bit hexadecimal value of Y axis encoder. (See **V54**).

V60- BP OUT

Shows an eight-digit binary display of drive control output and relay control bits being sent to the interface card circuitry. **1** means that the output is on, and **0** means that the output is off. Each digit controls a different function:

X	X	X	X	0	0	0	0
1 for low speed range, 0 for normal speed	1 for internal ref, 0 for speed key	Y D/A sign bit	X D/A sign bit	1 for cut off	1 for marker on	1 for preheat	1 for cut start
						Height sense disable	

MEMORY DISPLAY UTILITIES

The **1250** has five display utilities that display any memory or CRU location in the system in a variety of display formats. The CRU address space is a single bit processing utility that provides 32k bit locations in addition to the normal 64k address space of the microprocessor.

The five display utilities are:

SERV30 / DSPY30	Single word memory display
SERV31 / DSPY31	Double word memory display
SERV32 / DSPY32	16 bit CRU display
SERV33 / DSPY33	Single byte memory display
SERV34 / DSPY34	8 bit CRU display

Once the selection is made for any of these DISPLAYS, the display changes to the display format selected. See the individual descriptions of the display formats.

Regardless of which is selected, the address of the data is displayed on the left of the readout as a four-digit hexadecimal number, while the data are displayed on the right of the display. The memory address is flashing, which indicates that the address value can be changed by entering the desire value.

Once the correct address is entered, the data at that address are automatically displayed. To alter the data at that address, press <ENTER>. This stops the address flashing and starts flashing the data value. Any value entered on the keypad changes the data field. Once the new data value is entered, press <ENTER>. This places the data value back at the address location. The data field continues to flash and the value can be changed again. Once the flashing value is correct, press <ENTER> again to return to the address entry mode (address flashing).

To enter either the address or data value, use the numeric keypad. Use <CE> if you need to correct any mistakes during entry.

If you enter a hexadecimal value, use 0 through 9 and A through F. To enter a number, just press the value on the keypad. To enter A through F, use a two-key combination of <SHF> and one of the numbers on the keypad:

Press <SHF> <0> to enter a value of **A**

Press <SHF> <1> to enter a value of **B**

Press <SHF> <2> to enter a value of **C**

Press <SHF> <3> to enter a value of **D**

Press <SHF> <4> to enter a value of **E**

Press <SHF> <5> to enter a value of **F**

SERV30- SHOW WORD

This shows a single word, a 16-bit hexadecimal display or entry of any memory location in the system.

The display for the SERV30 / DSPY30 utility appears as follows:

MW@XXXX-AA HHHH

The address of the data is displayed on the left of the readout (indicated by **XXXX**). The address may be changed when it is flashing by entering the desired value on the keypad.

The data at the displayed address (indicated by AA) are interpreted as ASCII data.

The data at the displayed address is shown on the right of the readout (indicated by **HHHH**) is a four-digit hexadecimal value. To enter a new data value (only possible if entered through **SERV30**), first press <ENTER>. This causes the address value to stop flashing and the data value to start flashing. Now, any value entered on the keypad alters the data value.

Press <ENTER> when the value is correct. This places the new data at the indicated address. The data field continues to flash, so the data value can be changed again and again. To return to the address selection mode, press <ENTER> again. The data value stops flashing and the address value starts flashing, indicating that a new address may be entered.

SERV31- SHOW DBLE

This is a double word, a 32-bit hexadecimal display / entry of any memory location in the system.

The display for the **SERV31 / DSPY31- SHOW DBL** utility is as follows:

MD@XXXX-HHHHHHHH

The address of the two-word data is shown on the left side of the readout as a four-digit hexadecimal value.

The data are shown are the right of the readout as an eight-digit hexadecimal value.

SERV32- SHOW CRUW

This is a 16-bit hexadecimal display / entry of any CRU location in the processor's CRU address space.

The display for the **SERV32 / DSPY32- SHOW CRUW** utility is shown as follows:

CW@XXXX- HHHH

The address of the least significant bit of the 16-bit CRU value is shown on the left.

The 16-bit CRU value is shown as a four-digit hexadecimal value on the right of the readout.

SERV33- SHOW BYTE

This is a single byte, eight-bit hexadecimal display / entry of any memory location in the system.

The display for the **SERV33 / DSPY33- SHOW BYTE** utility is shown as follows:

MB@XXXX-BBBBBBBB

The address of the memory byte is shown on the left of the readout.

The data byte at the address is shown on the right of the readout in an eight-bit binary format.

SERV34- SHOW CRUB

This is an eight-bit hexadecimal display / entry of any CRU address in the processor's CRU address.

The display for the **SERV34 / DSPY34- SHOW CRUB** utility is shown as follows:

CB@XXXX-BBBBBBBB

The address of the least significant bit of the eight-bit CRU value is shown on the left of the readout as a four-digit hexadecimal number.

The eight CRU data bits are shown in binary format on the right of the readout. (Read most significant bit to least significant bit.)

SERV50 - AXIS SPEED

This function can only be accessed through the SERVICE menu. When selected, the display continuously shows the X/Y axis speeds. This display is particularly useful in adjusting the machine servo drives.

When this SERVICE MODE is selected, the display shows the X and Y axis speeds (IPM or MMPM) on the readout. These displays are much easier to use for checking the X and Y speeds than using a stopwatch or tachometer.

SERV51- SPD CAL

This function can only be accessed through the SERVICE mode. It performs an automatic speed calibration routine that matches the outputs from the **1250** to the servo drives. This helps counteract any non-linear characteristics of the drives and leads to a more consistent cutting speed regardless of the direction of travel.

Once the machine servos have been adjusted so that they run at the same speed in all directions, this function is used to balance the servo outputs of the **1250**.

After you have selected **SERV51** and have pressed <ENTER>, the display sequences through the following prompts:

SWITCH TO ---
HIGH SPEED RANGE--
THEN CYCLE START
RANGE 0-XXXXX

The **XXXXX** digits show the maximum speed of the machine. Press <CYCLE START> to start the calibration process.

The patented AUTOMATIC CALIBRATION ROUTINE runs a square shape and monitors the speed on each of the sides of the square. Each time the square is completed, the calibration factor for each side is adjusted to try to balance the speeds. Another square is run to check the results of the new calibration values. This process continues until the four directions are balanced, or for a maximum of 10 times around the square.

While the calibration is being done, the display shows the X and Y speeds.

Once all four directions are balanced, the machine stops and displays the following:

SWITCH TO ---
NEXT LOWER RANGE--
THEN CYCLE START
RANGE 0-XXXXX

The **1250** does not have any range switch; therefore, just press <CYCLE START>. The display changes to:

CALIBRATION DONE

At this point, the calibration values are stored in the operating memory of the system. However, they have not been transferred to the non-volatile parameter storage memory yet. Thus, if power is lost before they are transferred, the previous calibration values would be returned. See **SERV97- VAR. STORE** for details on permanently storing the values.

SERV52- MEM RESET

This function can only be accessed through the SERVICE mode. It causes the program memory to be erased and re-initialized. It is used when software is updated and requires re-structuring of the program storage memory, and erases the existing programs as well as the CUSTOM AUXILIARY FUNCTION CODE table.

When **SERV52- MEM RESET** is selected, it displays **YES+ RESET -NO**. To reset the memory for the new card, press <+/-> to toggle to **YES** in the readout (which will flash). Then press <ENTER>. To abort the procedure without altering the memory, press <+/-> to toggle to **NO** (which will flash) and then press <ENTER>.

If you select **YES**, a second prompt is issued to make sure that you are aware that the procedure erases any existing programs (**NO YOU SURE YES**). Again, to reset the memory, press <+/-> to toggle to **YES** (which will flash). Then press <ENTER>. To abort the procedure without altering the memory, press <+/-> to toggle to **NO** (which will flash) and then press <ENTER>.

SERV54- REF ADJUST

This function is accessed through the SERVICE mode only, and calibrates the A/D input circuitry to avoid a manual pot adjustment. The calibration value is stored in non-volatile memory along with the other system parameters.

This procedure is used to adjust the input circuitry that converts the voltage from the speed reference into the numerical value used by the **1250**. This procedure only needs to be done when the system is installed, or when service work to the system that might alter

the speed reference voltage has occurred. The voltage from the speed reference is converted into a digital value that displays **FEEDRATE- XXXX** when **DSPY03** is selected. When the speed reference is set for maximum speed, the value displayed on the readout should equal the number entered for **SD04- MAX SPEED**. If the displayed value is too low, or if the feedrate must be reduced before the numbers start dropping, this procedure should be done.

To perform the AUTOMATIC REFERENCE adjustment:

1. Adjust the feedrate to full speed.
2. Press <ENTER>. The readout temporarily displays the data and calibration values, and then changes to the normal **FEEDRATE-XXX.XX**.

At this point, the value displayed on the readout should be the same as the value entered for the maximum drive speed entered in **SD04- MAX SPD**. This value, like all the setup values, is not permanent until you perform the **SERV97- VAR STORE** procedure. See VARIABLE STORE for further details.

SERV70- CUSTOM AUX

This SERVICE function is used to set up the data tables for auxiliary function code translation. These tables are used when programs are loaded using either WADR3 or ESSI1 program formats to translate the auxiliary function codes from the input values to the standards used by the **1250**.

The **1250** includes several features that allow you to alter the format of the programs loaded into the system so they match the programming standards of the system. These programs must be loaded through the RS-232 port. They may be programmed in either ESSI or Word Address. Once example of the conversion utilities of the **1250** is absolute or incremental programming (see SD51-PRGM FORMAT), which allows programming in either incremental or absolute dimensions with selectable definition of arc I and J dimensions.

Another example of the conversion utilities of the **1250** is AXIS REVERSAL AND EXCHANGE (see SD51-PRGM FORMAT), which allows definition of the X and Y axis to be reversed and permits +/- sign definitions for each axis to be configured to match the incoming program.

Along with these features, the CUSTOM AUXILIARY FUNCTION CODE table allows the auxiliary codes within a part program to be converted to the standard function codes used by the **1250**. For example, most systems use **G02** for a clockwise arc and a **G03** for counter-clockwise. However, if the programming standard used for other machines at your site happens to use a **G27** and **G33** or even a pair of **M** codes, they can be reassigned by the CUSTOM AUXILIARY FUNCTION CODE CONVERSION feature, so that the correct clockwise and counter-clockwise arcs are cut.

This feature also allows ESSI auxiliary function codes to be re-assigned in the same way.

The CUSTOM AUXILIARY FUNCTION CODE CONVERSION feature only works if programs are loaded using WADR3 or ESSI1 special program formats. The standard programming instructions in the PART PROGRAMMING section of this manual do not mention these formats since they are not required by the majority of the users. The special conversions and axis definitions as described in SD51- PRGM FORMAT and the auxiliary function

code conversions do not affect programs if they are loaded using any of the other programming formats (WADR, WADR1, WADR2, or ESSI). This allows standard programming to be less confusing and simpler.

To use the CUSTOM AUXILIARY FUNCTION CODE CONVERSION feature, first set the left most digit of SD51- PRGM FORMAT to **1**. If it is **0**, the standard WADR or ESSI program formats for the **1250** are used regardless of the setting of this table.

After SD51- PRGM FORMAT digits are properly set, the conversion table must be loaded for the necessary code changes.

The table works by checking each incoming Word Address **M** or **G** code, and all ESSI auxiliary functions. It scans through the table to see if the specific code is listed in the conversion table. If it is not, the code remains unchanged and is loaded normally. If the table contains a conversion definition for the particular auxiliary code, however, the input code is replaced with the new value from the table. It is then processed and stored in memory.

The table may contain up to 50 conversions, made up of any combination of Word Address **M** and **G** codes or ESSI function codes. Each entry in the table contains information that defines which type of input it is looking for and what the conversion should be.

To access the table for display and possible modification of the conversion values, select **SERV70- CUSTOM AUX**. After you press <ENTER>, memory is checked to see if the auxiliary function code table has been initialized. If so, the prompting continues by displaying the first table location **AUX01-**.

Since the AUXILIARY FUNCTION CODE CONVERSION table is stored in the battery-backed program memory, room for the table data must be allocated in memory. This is performed automatically when the SERV52- MEMORY RESET function is done. If the **1250** has been updated, however, it is possible that the room for this table is not available in memory. If this occurs, an error message (**AUX TABLE ERROR**) is displayed, which indicates that the table is not present in memory. To correct the error and allow the table to be loaded, perform SERV52- MEMORY RESET. Once the memory is cleared, select SERV70- CUSTOM AUX and continue.

There are three basic displays that are used in loading the data into the conversion table. The first occurs when the table is first entered, or after a value has been changed. It shows which of the 50 table entries is being displayed, along with the current definition for that table value. For example, **AUX01-M20-CUTOFF** shows that the first table location is being referenced, and that a Word Address function code M20 is to be converted to perform the cut off function of the control. Another example, **AUX14-33-KRFOFF**, indicates that table position 14 is defined to convert an ESSI 33 function code to the KERF OFF operation in the system.

You can reach the table position by either pressing the numbered keys on the keypad or by using the UP and DOWN scroll arrow keys to scroll through a list. If you press a numbered key, the readout immediately changes to show the new table location. You do not need to press <ENTER>; simply press the two-digit number.

Once the table position you want is displayed, you can display the conversion data definition to be modified. Press the <ENTER> key to change from the DISPLAY mode to the MODIFY ENTRY mode.

In the first example, where **AUX01-M20-CUTOFF** was displayed, if you press <ENTER>, the display changes to **32005-M20-CUTOFF**. The five-digit number on the left is called the **TVVFF** code, where the left most digit (T) indicates the auxiliary code type as:

1 ESSI function code
2 Word Address **G** function code
3 Word Address **M** function code

The next two digits (VV) contain the actual number of the ESSI, or Word Address **G** or **M** code. In this example, since an M20 is to be converted, the digits are set to **20**.

The final two digits (FF) contain the internal function code that is assigned to the input auxiliary function code. These numbers are selected form the following table:

FF Code	Name	Function
00	PGMNOP	No operation; used to ignore auxiliary functions
01	CWARC	Clockwise arc direction
02	CCWARC	Counter-clockwise arc direction
03	CHNTOP	Chain top
04	CHNBOT	Chain bottom
05	CUTOFF	Cut off
06	CUTON	Cut on
07	KRFOFF	Kerf off
08	KRFLFT	Kerf left
09	KRFRHT	Kerf right
10	MRKOFF	Marker #1 off
11	MRKON	Marker #1 on
12	OFSOFF	Marker offset off
13	OFSON	Marker offset on
14	INCH	Programming in inch units
15	MMETER	Programming in millimeter units
16	ABSDIM	Absolute program dimensions
17	ABSRPL	Absolute register preload
18	INCDIM	Incremental program dimensions
19	DWELL	Programmable dwell
20	LEADIN	Special lead-in block
21	PGMSTP	Program stop
22	PGMEND	Program end
23	PGMRWD	Program end with rewind
24	SKPON	Tape ignoring on
25	SKPOFF	Tape ignoring off
26	MRK2ON	Auxiliary output on

27	MRK2OF	Auxiliary output off
28	XOFST2	X Marker #2 offset
29	YOFST2	Y Marker #2 offset
30-38		Not used
39	TB SEL	Overlay parameter table select
40	GOHOME	Go to table home
41	TOOL	Tool select
42	PRGKRF	Program kerf
43	FEEDRT	Program feedrate
44	HT DIS	Plasma height disable
45	HT ENA	Plasma height enable
46	LDAUTO	Auto load/run

NOTE: If any table location is loaded with a **TVVFF** value of **00000**, the software does not scan past that location. For example, if table location **AUX22** contains **00000**, no conversion codes contained in **AUX23** through **AUX50** are processed. Therefore, do not enter **00000** as the **TVVFF** code for any table location unless none of the following locations are used. If the conversion information at a particular table location needs to be erased, either use it for a new conversion, or enter an unused auxiliary code as a **PGMNOP** command.

The following are several examples of typical conversion table **TVVFF** codes, with an explanation of their function:

TVVFF- 23302	Causes incoming **G33** to be loaded as a COUNTER-CLOCKWISE ARC command
TVVFF- 12206	Causes incoming ESSI **22** function code to be loaded as CUT ON command
TVVFF- 36422	Causes incoming **M64** to be loaded as PROGRAM END command.
TVVFF- 31200	Causes incoming **M12** to have no function; it is ignored.
TVVFF- 26605	Causes incoming **G66** to be loaded as a CUT OFF command. Normally **G** functions do not control cutting functions; however, the conversion table even allows for this type of re-assignment.

Using the numeric keypad, enter the desired **TVVFF** code. As soon as the numeric entry starts, the display changes to **TVVFF- XXXXX**, with the newly entered digits appearing in the **XXXXX** position on the readout. When you press <ENTER>, the display reverts back to the MODIFY ENTRY mode and shows the result of the new **TVVFF** code just entered.

For example, if the display shows **32005-M20-CUTOFF** and you want to change this table position to convert a **G31** to the CUT ON command, use the numeric keypad to enter **23106**. Each digit appears as it is entered. After all five digits are entered, the display shows **TVVFF- 23106**. Press <ENTER> to load the new table value. The display returns to the MODIFY ENTRY mode and shows **23106-G31-CUTON**. If the value is incorrect,

re-enter the correct five digit code and press <ENTER> again. Once the data is correct, press <ENTER> a second time to return to the TABLE POSITION DISPLAY, which now shows the next table position. If the previous entry had loaded the **AUX01** table location, the display now shows **AUX02-_____**.

To determine if you need this feature, consult the PART PROGRAMMING section of this manual to see if the standard auxiliary function codes for the **1250** are acceptable. If they are, there is no need for the CUSTOM AUXILIARY FUNCTION CODE CONVERSION feature. If special conversions are required, set up this table to perform the needed reassignments.

Once this table is loaded, press <RECYCLE> to exit.

SERV78- LOOP BACK

This procedure aids in debugging the RS-232 link from the **1250** to a host computer.

When selected, this procedure begins sending the characters **0 - 9** and **A - Z**, followed by a <CR><LF>. This pattern is sent continuously as long as the clear-to-send (CTS) input line is in the active state.

The display contains two data fields. The left side of the screen shows the characters that are being received on the RS-232 port, while the right side shows the status of the CTS line. If the CTS line is high (which allows the **1250** to transmit data), the right side shows **CTS**. If the CTS line goes low, the right side shows **NOCTS**. The unit can be connected to a monitor or a computer running CROSS TALK or a similar terminal emulation software package and the data link in both directions can be verified. Also, by looping the **1250** back to itself, it provides a self-check. If the screen shows that it is receiving the data being transmitted, it probably indicates that the RS-232 port of the **1250** is functioning properly.

When fiber optic modems are used, the loopback can be done at two locations. Either a single fiber can be looped between the transmit and receive port of the modem inside the **1250**, or the modem at the other end of the link can have its RS-232 signals looped back so that the data being sent by the **1250** goes out and back through both modems.

The selection of baud rate and character format is similar to the operation of the program downloading software. The values stored in **SD50** are displayed as the defaults when the loopback routine is called. The selections for program type (WADR, ESSI, etc.) and handshaking protocol (RTS, XON, etc.) do not have any effect on the loopback test.

NOTE: There is a short delay after every 10 characters sent from the **1250**. The data displayed in the readout when the **1250** is looped back to itself pauses and allows it to be read and checked for proper operation. This delay may be disabled by pressing <.> (the decimal point key).

SERV97- VAR STORE

This SERVICE function allows you to store the setup parameters adjusted with **SERV10** and the speed calibration and reference adjustment results form **SERV54** in non-volatile memory inside the **1250**. If this function is not used, all adjustments return to their

previous values when the power to the system is turned off or you press <RECYCLE> to switch modes of operation.

VARIABLE STORE

The **1250** is equipped with non-volatile memory, which is used to store the SYSTEM DATA parameters set up with the **SERV10** procedure, the calibration values resulting from the **SERV51** speed calibration, and **SERV54** reference adjust. This memory requires no battery or external power in order to retain the data. The only way the data in the memory can be changed is by using the **SERV97** procedure.

Since all data values are stored together, all adjustments of the SYSTEM DATA parameters and the speed calibration should be done before using the **SERV97** procedure.

If any of the SYSTEM DATA parameters are readjusted at a later date, or if a second speed calibration is done, this procedure should be used again to store the changes.

NOTE: It is possible to make adjustments to the SYSTEM DATA parameters without losing the original settings. To do this, use **SERV10** and **SERV40 - 44** to make any desired changes once a part program is already running. Do not, however, use the **SERV97** procedure to store them. The **1250** uses the changed data until you press <RECYCLE> or the power is turned off. When the power is re-applied or you press <RECYCLE>, the original values still stored in non-volatile memory are returned. This can be a useful testing tool, since the values can be changed while a part is running without worrying about permanently altering the machine's performance.

When you select the **SERV97** function, the display changes to ***** WARNING *** - CHECK MANUAL**. At this point, press <SHF>. This stores the new values in non-volatile memory. When the storing is complete, the unit returns to its normal operation.

SERV98- SYS. RESET

This function causes a system reset, the same as if the unit had been unplugged and plugged in again.

If a new feature code is entered into the **1250**, the unit must perform a SYSTEM RESET before the newly enabled feature actually becomes available.

NOTE: **SD98** does not save any parameters in non-volatile memory.

TYPICAL SETUP EXAMPLE

TYPICAL SETUP EXAMPLE DESCRIPTION

The following description is provided as an example of the normal sequence used when setting up the control on a cutting machine. It is not the only method; rather, it is a logical order that ensures that all necessary parameters are set without unnecessary work.

For this example, the cutting machine has the following characteristics. Note that only inch units are used. The metric setup, however, would be the same.

- System operates in INCH units.
- The drive system is capable of 250 IPM.
- 250-line motor-mounted encoders are used: the axis travels 0.0787 inches per encoder revolution.
- The plate to be cut is located to the left of the operator.
- Plasma cutting only is used.

Before starting, ensure the drive emergency stop is pushed in. This should prevent the machine from moving until the parameters are initially set.

1. Select **SERV51- SPD CAL** and press <ENTER>. The readout prompts you to **SET SPD DIAL-THEN CYCLE START** and then displays **SET XXX - XXXXX** and the current setting of the feedrate is displayed. Do not press <CYCLE START> as the readout instructs. Instead, press <RECYCLE>. This aborts the speed calibration; the speeds, however, have been preset to full speed. After all the parameters are set, the speed calibration can be done correctly.
2. Select **SERV10- SYSTEM DATA**.
3. Set the following parameters as indicated. Note that some of the values are preset to an estimated value now and then fine-tuned later. These estimated values are typical entries for the parameter but are not to be taken as the only valid ones.

Parameter	Set To	Explanation
SD60- OPER	SYS INCH	Although this is not the first parameter, it should be set first so that any other speed or distance values appear in the correct units.
SD61- SYS CONFIG	**22**	Standard **1250.**
SD68- SPEED RANGE	**4**	Normal.
SD01- ARC DELAY	**0.10**	Delay the start of motion for 0.10 seconds after the ARC ON input is received.

SD02- BLEEDOFF	**0.00**	This parameter is for oxygen/fuel cutting only, and should be set to 0.00 for plasma only machines.
SD03- ACCEL TIME	**20.0**	Estimated acceleration time, which may be adjusted later.
SD04- MAX DRV SPD	**250.00**	Set to maximum speed of drive system of cutting machine, given as 250 IPM.
SD06- BACKUP SPD	**40.0 EST**	Nominal back up speed, which may be adjusted later.
SD07- CORNER SPD	**10.0 EST**	Nominal corner speed, which may be adjusted later.
SD08- MIN HOLD SPD	**2.00 EST**	Nominal value, which may be adjusted later.
SD09- MAX ERR SPD	**120.0 EST**	This value is usually acceptable as is, but may be adjusted later.
SD10- RUN SPD LMIT	**250.00**	Allows machine to cut up to maximum speed capacity of the drive system.
SD11- TRV SPD LMT	**250.00**	Allows machine to traverse at maximum speed capacity of the drive system.
SD12- MIN ACCEL	**0.10**	Nominal value, which may be adjusted later.
SD14- GAIN BREAK	**0**	Normally set to 0.
SD15- ERR WRN DST	**.25 EST**	Error warning distance set so a warning sounds if the machine jams and deviates from cut path by more than .25 inch.
SD15- LOOP GAIN	**2.00 EST**	Loop gain is adjusted once a test part is run.
SD17- ARC OFF TIME	**0.50**	This provides a delay before the ARC OFF condition is recognized.
SD18- SLWDWN DIST	**2.00 EST**	Nominal slow down distance, which is adjusted when a test part is run.
SD19- DISABLE DIST	**0.75**	Look-ahead distance for disabling height sensor relay.
SD20- X DIST/REV	**4.7660**	Given value for distance covered in one revolution of X axis encoder.
SD21- Y DIST/REV	**4.7660**	Given value for distance covered in one revolution of Y axis encoder.

SD22- ENC LIN/REV	**8000**	Encoders specified as 200 lines per revolution.
SD23- X ENC DIR	**NORM**	Preset, but must be tested.
SD24- Y ENC DIR	**NORM**	Preset, but must be tested.
SD25- X DRIVE DIR	**REV**	Preset, but must be tested.
SD26- Y DRIVE DIR	**REV**	Preset, but must be tested.
SD27- PLATE SIDE	**LEFT**	Information given stated that plate is cut to the left of the operator.
SD28- HEIGHT RELAY	**NORM**	Relay is used for plasma auto height disable. Not used in oxygen/fuel cutting.
SD29- SLWDWN RAD	**4.00**	Nominal slow down radius although this value seems correct for many machines.
SD30- MIN RAD SPD	**30.00**	Typical minimum radius speeds are between 10 - 30 IPM. Adjusted later if necessary.
SD31- PLASMA TB1	**NO**	Plasma overlay table is not used.
SD32- MIN SLW ANG	**10**	Typical value for most machines.
SD33- MAX SLW ANG	**22**	Typical value for most machines.
SD40- X MARKER OFFSET	**0**	Marker offset in the X direction.
SD41- Y MARKER OFFSET	**0**	Marker offset in the Y direction.
SD42- MARKING SPEED	**0**	Plate marking speed.
SD43- MARKER DELAY	**0**	Marker delay time in seconds.
SD45- DEFAULT DWELL	**0**	Default dwell time in seconds.
SD46- MIN OFF DLY	**.50 EST**	Nominal value, which gives a .5 seconds delay after any function is turned off.
SD47- X OFFSET #2	**0.00**	Not used.
SD48- Y OFFSET #2	**0.00**	Not used.
SD49-START DELAY	**.20**	Delay for 2.00 seconds.
SD50- SERIAL DEFN	**2135**	See INSTALLATION AND SETUP.
SD51- PRGM FORMAT	**00000000**	See INSTALLATION AND SETUP.
SD52- SPEC EOP	**00000000**	No special end of program.
SD53- FILE EXTEN	**434E4300**	ASCII for **CNC**.
SD60- OPER SYS	**INCH**	Given information.
SD62- SYS CONFIG2	**06000003**	Digital feedrate, home limit switches, teachable preheat

time, and speed-dependent accleration enabled.

After the values are preset, the following procedures will help in adjusting the values.

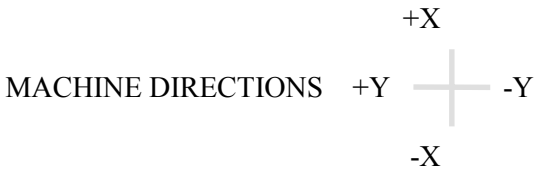

1. Temporarily change **SD8- MIN HOLD SPD** to **0.00** so the encoder feedback has no influence.
2. Turn up the feedrate and jog the machine in the +X direction. The machine should move in the rail axis, away from you. If the machine moves toward you in the X axis, reverse the setting of **SD25- X DRIVE DIR** to the opposite setting (**NORM** or **REV**). If the machine moves in the cross axis, the wires to the drives are crossed. Correct the wiring, re-enter the preset values, and go on.
3. Jog the machine in the +Y direction. The machine should move in the cross axis, to the left. If the machine moves to the right when you press the +Y jog, reverse the setting of **SD26- Y DRIVE DIR** to the opposite setting (**NORM** or **REV**).
4. Set the direction of the encoders. Use **SERV01- X/Y DSPLY** to show the X and Y positions and press <CE> to clear the X and Y values. Jog the machine in the +X direction to move down the rail. If the X readout counts positive (+), the X axis encoder direction is correct. If the X position counts negative (-), reverse the setting of **SD23- X ENC DIR** to the opposite setting (**NORM** or **REV**).
5. Jog in the +Y direction. If the Y position counts positive (+), the Y axis encoder direction is correct. If the Y position counts negative (-), reverse the setting of **SD24- Y ENC DIR** to the opposite setting (**NORM** or **REV**).
6. Reset **SD8- MIN HLD SPD** to **2.00**.
7. Select **SERV54-AUTOMATIC REFERENCE ADJUSTMENT**. Adjust the feedrate to the full speed maximum position. Press <ENTER>. The readout temporarily shows the data and calibration values, and then displays **FEEDRATE= 250.00**. At this point, the value displayed on the readout should be the same as the value entered for the maximum drive speed in SD04 (250 for this example).
8. Set the control to test run a 5.00 inch diameter CHAIN CIRCLE part. Start the test run and adjust the feedrate to full speed. While the machine is going around the circle, if the path oscillates, reduce the setting of **SD16- LOOP GAIN** until the oscillation stops. If no oscillation is noted, try raising **SD16- LOOP GAIN** value until the shaking starts and then reduce it until it just stops. Now check the performance of the machine as it slows for each corner of the part. If it appears to be banging into the corners rather than smoothly decelerating, either increase **SD18- SLOWDOWN DIST** or decrease **SD07- CORNER SPD** values. Since this is a trial and error type of adjustment, it is impossible to predict which adjustment gives the best results. Similarly, if the corners appear mushy, reduce **SD18- SLOWDOWN DIST** or increase **SD07- CORNER SPD**. After the

machine slows for a corner, notice the acceleration out of the corner back to full speed. If it appears too long, reduce **SD03- ACCEL TIME** value. Similarly if the acceleration appears too fast, increase the acceleration time.

9. Now select shape 23 (SQUARE- RADIN) and enter the appropriate dimensions to create a 5 inch rectangular part. Enter a corner radius of 0.10 inch in order to check **SD30-MIN RAD SPD**. Run the part at full speed and notice the speed during the small radii in the corners. If it appears that the radius runs too slowly, increase **SD30-MIN RAD SPD**. If the machine overshoots the radius or seems to be running the small corner radii too quickly, lower the **SD30-MIN RAD SPD** value. The objective of all these adjustments is to provide the smoothest, most accurate operation with a minimum of time spent in the corners. Try various combinations of adjustments to get the optimum performance.

10. If the machine drives are well balanced, there is no need to do the automatic speed calibration. However, if the speeds are not balanced, the automatic speed calibration routine should be performed. See **SERV51- SPD CAL**.

After all parameters are adjusted, and the speed calibration is done, go to the **SERV97- VAR STORE** section of the manual and store the new values in the non-volatile memory.

1250 TYPICAL SETUP QUICK REFERENCE

System Data Parameters

01	0.10	35	Not used	68	4
02	0	36	Not used	69	0
03	20	37	Not used	70	0.00
04	250.00	38	Not used	71	0
05	Not used	39	Not used	72	Not used
06	40.00	40	0.0000	73	Not used
07	10.00	41	0.0000	74	0.0000
08	2.00	42	0.00	75	0.0000
09	120.00	43	0.00	76	0.0000
10	250.00	44	Not used	77	0.0000
11	250.00	45	0.00	78	0.0000
12	.10	46	0.50	79	0.0000
13	Not used	47	0.0000	80	0.0000
14	00	48	0.0000	81	0.0000
15	1.0000	49	0.20	82	0.0000
16	2.00	50	2135	83	0.0000
17	0.50	51	00000000	84	0.0000
18	2.00	52	00000000	85	0.0000
19	0.7500	53	434E4300	86	0.0000
20	4.7660	54	Not used	87	0.0000
21	4.7660	55	Not used	88	0.0000
22	8000	56	Not used	89	0.0000
23	NORM	57	Not used	90	0.0000
24	NORM	58	Not used	91	0.0000
25	REV	59	Not used	92	0.0000
26	REV	60	INCH	93	0.0000
27	LEFT	61	22	94	0.0000
28	NORM	62	06000003	95	0.0000
29	4.00	63	Not used	96	0.0000
30	30.00	64	Not used	97	0.0000
31	NO	65	0000	A0	0.0000
32	10	66	Not used	A1	0.0000
33	22	67	Not used	A2	0.000
34	Not used				

Main Card Jumpers

J2	B	J3	A	J4	B	J5	A

MACHINE INTERFACE

RELAY CARD TECHNICAL DESCRIPTION

The **1250** Relay Card provides the necessary hardware to bring in the incoming power and the mechanical relays used to interface to the machine. The plasma hook-up is through a male 16-pin CPC connector.

The incoming AC line enters the **1250** through a male 7-pin CPC connector, as follows:

Position	Pin 1	Pins 4 and 6	Pin 5
Function	Hot	Earth Ground	Neutral

LINE POWER INPUT

The AC incoming line enters the Relay Card through male 0.25 in tabs. The hot side immediately encounters the system fuse. The neutral side is connected to one side of the RC snubber and is daisy-chained to more neutral terminals.

The fused hot goes to the line jumper, which selects the incoming power. The two positions are 115 and 230.

The placement of the jumper determines which primary tap of the power transformer is used. The 115 primary tap also powers the 115 volt cooling fan and the primary of the small transformer used for the PLASMA CUT SENSE input.

LIFTER

The lifter toggle switch's power comes from an external supply. The lifter toggle switch has three positions: momentary up with spring return, momentary down with spring return, and maintained center off. The lifter's power exits the **1250** through a female 4-pin CPC connector, as follows:

Position	Pin 1	Pin 2	Pin 3	Pin 4
Function	Supply	Up Winding	Down Winding	Chassis Ground

POWER SUPPLY

The secondary of the power transformer is wired to a full wave bridge rectifier. The output of the bridge is unregulated ±30 VDC. This is wired to the Relay Card and is filtered by capacitors C1 and C2.

EMERGENCY STOP

The input to the emergency stop switch is the 30 VDC supply. When the emergency stop switch is released, the output of the switch energizes CR6 on the Relay Card. CR6 is used as the control relay for the drives. When CR6 is de-energized, the drives are off and the 24 VDC supply voltage for the other relays is also off.

PLASMA CUT SENSE

The PLASMA CUT SENSE input can accept an AC or DC voltage between 24 and 230 volts, or a potential free contact closure from the plasma unit. The input voltage is rectified, filtered, and isolated by an opto-coupler. When the plasma cut sense voltage is present, the LED in the opt-coupler is on and the photo-transistor in the opto-coupler conducts outputting the CUT ON SENSE signal, which is used by the micro-processor card to determine when the plasma arc is firing.

The PLASMA CUT SENSE input is wired as follows:

Position	Pin 13	Pin 14	Pin 15	Pin 16
Function	24 VAC Output	O V Output or Input	24 - 115 V Input	230 V Input

MARKER

The PLATE MARKER control relay (CR5) is controlled by the micro-processor. A potential free Form C contact is provided for the plate marker, as follows:

Position	Pin 10	Pin 11	Pin 12
Function	Common	Normally Closed Output	Normally Open Output

HEIGHT DISABLE

The HEIGHT SENSOR DISABLE control relay (CR4) is controlled by the micro-processor. A potential free Form C contact is provided for the height sensor, as follows:

Position	Pin 7	Pin 8	Pin 9
Function	Common	Normally Open Output	Normally Closed Output

PLASMA START

The PLASMA START control relay (CR3) is controlled by the micro-processor. A potential free Form C contact is provided for the plasma unit, as follows:

Position	Pin 1	Pin 3	Pin 2
Function	Common	Normally Open Output	Normally Closed Output

PLASMA STOP

The PLASMA STOP control relay (CR1) is controlled by the micro-processor. A potential free Form C contact is provided for the plasma unit, as follows:

Position	Pin 4	Pin 6	Pin 5
Function	Common	Normally Open Output	Normally Closed Output

DIP SWITCH

The DIP switch allows flexibility to several of the control relays, as follows:

Position	Switch 1	Switch 2	Switch 3	Switch 4
On (Closed)	Maintained PLASMA STOP relay contact	PLASMA START bypass	Maintained PLASMA START relay contact	Internal plasma relay for arc sense
Off (Open)	Momentary PLASMA STOP relay contact	Normal PLASMA START	Momentary PLASMA START relay contact	External ARC ON sense input

INTERFACE CARD TECHNICAL DESCRIPTION

The Interface Card provides the electronics necessary to allow analog and digital inputs and outputs to be passed back and forth between the Micro-processor Card and the rest of the system. The following represents a summary of I/O for the Interface Card.

POWER SUPPLY

An unregulated ±30 VDC enters the Interface Card and is converted to a regulated ±15 VDC, + 12 VDC and +5 VDC.

ANALOG INPUTS TO INTERFACE CARD

Rail digital to analog speed reference from the Micro-processor Card PL4 Pin 33.

Cross digital to analog speed reference from the Micro-processor Card PL4 Pin 40.

ANALOG OUTPUTS FROM INTERFACE CARD

Digital to analog reference to the Micro-processor Card PL4 Pin 41.

Analog to digital reference to the Micro-processor Card PL4 Pin 48.

Rail speed reference to the Drive Card PL3 Pin 10.

Cross speed reference to the Drive Card PL3 Pin 6.

ENCODER INPUTS TO INTERFACE CARD

The rail and cross encoders' signals (A, /A, B, /B, M, /M) from PL1.

ENCODER OUTPUTS FROM INTERFACE CARD

The rail A encoder signal to the Micro-processor Card PL4 Pin 45.

The rail B encoder signal to the Micro-processor Card PL4 Pin 44.

The cross A encoder signal to the Micro-processor Card PL4 Pin 43.

The cross B encoder signal to the Micro-processor Card PL4 Pin 42.

DIGITAL INPUTS TO INTERFACE CARD

The PLASMA SELECT input from the Drive Card PL3 Pin 31.

The CUT ON sense input from the Drive Card PL3 Pin 30.

The BEEPER ON signal from the Micro-processor Card is PL4 Pin 47.

The HEIGHT SENSE disable signal from the Micro-processor Card PL4 Pin 10

The CUT ON signal from the Micro-processor Card PL4 Pin 11.
The CUT OFF signal from the Micro-processor Card PL4 Pin 8.

DIGITAL OUTPUTS FROM INTERFACE CARD

The BEEPER ON signal to the beeper PL2 Pin 6.
The HEIGHT SENSE disable signal to the Drive Card PL3 Pin 33.
The MARKER signal to the Drive Card PL3 Pin 32.
The CUT ON signal to the Drive Card PL3 Pin 30.
The CUT OFF signal to the Drive Card PL3 Pin 29.

PRODUCT SPECIFICATION

PHYSICAL ENVIRONMENT OPERATING LIMITS

Temperature	0 to 50 C
Relative Humidity	5% to 85% (1 g/m3 to 25 g/m3)
Atmospheric pressure	86 kPa to 106 kPa
Climatic Class	3K3

ELECTRICAL SPECIFICATIONS

The Burny 1250 is intended for use in heavy industrial environment. It is not intended for use in commercial or light industry environments.

MYY-10770
BURNY 1250 PLUS rear panel **"POWER"** connector
Electrical Ratings for CE Compliant Installations
(Any pins not listed in the table are not used – do not make any connection to these pins)

PIN #	DESCRIPTION	RATINGS
1	Line HOT input	Proper voltage is set by internal jumper for 115 or 230 V max AC, 50/60 Hz, 6.3 A maximum. **IMPORTANT: Set internal jumper according to voltage to be used.** See Installation section of operation manual. Protected by "FUPWR" fuse on rear panel, a 6.3 A time delay fuse.
5	Line NEUTRAL input	Neutral connection for pin 1 ac power.
4, 6	Chassis Ground	(18 AWG wire)

MYX-10770
BURNY 1250 PLUS rear panel **"PLASMA"** connector
Electrical Ratings for CE Compliant Installations
(Any pins not listed in the table are not used – do not make any connection to these pins)

PIN #	DESCRIPTION	RATINGS
1	Common contacts of the normally open and normally closed contact sets of the Plasma Start Relay	230V max AC, 50/60 Hz, or 24V max DC 2A Max
2	One side of the Plasma Start Relay's normally closed contacts	230V max AC, 50/60 Hz, or 24V max DC 2A Max
3	One side of the Plasma Start Relay's normally open contacts	230V max AC, 50/60 Hz, or 24V max DC 2A Max
4	Common contacts of the normally open and normally closed contact sets of the Plasma Stop Relay	230V max AC, 50/60 Hz, or 24V max DC 2A Max
5	One side of the Plasma Stop Relay's normally closed contacts	230V max AC, 50/60 Hz, or 24V max DC 2A Max
6	One side of the Plasma Stop Relay's normally open contacts	230V max AC, 50/60 Hz, or 24V max DC 2A Max
7	Common contacts of the normally open and normally closed contact sets of the Height Sensor Disable Relay	230V max AC, 50/60 Hz, or 24V max DC 2A Max

8	One side of the Height Sensor Disable Relay's normally open contacts	230V max AC, 50/60 Hz, or 24V max DC 2A Max
9	One side of the Height Sensor Disable Relay's normally closed contacts	230V max AC, 50/60 Hz, or 24V max DC 2A Max
14	Arc On Sense Input - return	Return for signal of pin 15 or 16.
15	Arc On Sense Input	24-115 V DC or AC 50 or 60 Hz; 30 mA max
16	Arc On Sense Input	115-230 V DC or AC 50 or 60 Hz; 30 mA max

MYX-10770
Burny 1250 PLUS rear panel **"CMTR"** and **"RMTR"** connectors
Electrical Ratings for CE Compliant Installations

(Any pins not listed in the table are not used – do not make any connection to these pins)

PIN #	DESCRIPTION	RATINGS
3, 5	Clutch (optional) (Isolated Form-A dry-contact relay)	230 V max AC, 50/60 Hz, or 24 V max DC. 2A max CR5,6,7,
2, 8	Rail Axis Motor	± 30 VDC, 4A
1, 4	Rail Axis Tach	20 V, 5 mA max
6	Input for '+' limit switch	10 mA required to pull the 24 VDC input to common on pin 7.
7	Input common for limit switches	25 mA, to be used as common for pins 7 and 9.
9	Input for '-' limit switch	10 mA required to pull the 24 VDC input to common on pin 7.

MYX-10770
Burny 1250 PLUS rear panel **"RENC"** and **"CENC"** connectors
Electrical Ratings for CE Compliant Installations

(Any pins not listed in the table are not used – do not make any connection to these pins)

PIN #	DESCRIPTION	RATINGS	
		Single-ended encoders "SW" on Interface Board all open	Differential encoders "SW" on Interface Board all closed
1	Supply Common (to power encoder)	0 V	0 V
2	/Z channel input	Not used, do not connect anything to this pin.	Differential driver input paired with pin 6. 150 Ω internal resistor to ground. Minimum differential: 500 mV. Maximum differential: 5 V.
3	/A channel input	Not used, do not connect anything to this pin,	Differential driver input paired with pin 8. 150 Ω internal resistor to ground. Minimum differential: 500 mV. Maximum differential: 5 V.
5	/B channel input	Not used, do not connect anything to this pin,	Differential driver input paired with pin 9. 150 Ω internal resistor to ground. Minimum differential: 500 mV. Maximum differential: 5 V.
6	Z channel input	Designed for open-collector type input. HIGH = Pulled to +5 VDC supply with 4.7 kΩ internal resistor. 3 VDC minimum. LOW = Pull down to Supply Common. 1 VDC maximum.	Differential driver input paired with pin 2. 150 Ω internal resistor to ground. Minimum differential: 500 mV. Maximum differential: 5 V.

7	+5 VDC supply output (to power encoder)	+5 VDC @ 500 mA	+5 VDC @ 500 mA
8	A channel input	Designed for open-collector type input. HIGH = Pulled to +5 VDC supply with 4.7 kΩ internal resistor. 3 VDC minimum. LOW = Pull down to Supply Common. 1 VDC maximum.	Differential driver input paired with pin 3. 150 Ω internal resistor to ground. Minimum differential: 500 mV. Maximum differential: 5 V.
9	B channel input	Designed for open-collector type input. HIGH = Pulled to +5 VDC supply with 4.7 kΩ internal resistor. 3 VDC minimum. LOW = Pull down to Supply Common. 1 VDC maximum.	Differential driver input paired with pin 5. 150 Ω internal resistor to ground. Minimum differential: 500 mV. Maximum differential: 5 V.

MYX-10770
Burny 1250 PLUS rear panel **"LIFTER"** connector
Electrical Ratings for CE Compliant Installations
(Any pins not listed in the table are not used – do not make any connection to these pins)

PIN #	DESCRIPTION	RATINGS
1	Power to Lifter Switch	5 A max., 24V AC or DC.
2	Output- Lifter up	5 A max., 24V AC or DC
3	Output - Lifter down	5 A max., 24V AC or DC
4	Ground to system ground, and to Lifter Supply voltage ground.	5 A max., 24V AC or DC

MYX-10770
Burny 1250 PLUS rear panel **"COMM"** connector
Electrical Ratings for CE Compliant Installations
(Any pins not listed in the table are not used – do not make any connection to these pins)

PIN #	RS-232 signal	RS-422 signal
2	Input: R IN - Received data input	B' - received data input into Burny 1250
3	XOUT - Transmitted data output	B - transmitted data output from Burny 1250
4	Output: +5 VDC, 25mA	Output: +5 VDC @ 25 mA
5	Output: +12 VDC, 25mA	Output +12 VDC @ 25 mA
6	Output: -12 VDC, 25mA	Output -12 VDC @ 25 mA
7	Signal ground	Signal ground
8	Output: control status line	A - transmitted data output from Burny 1250
9	Input: status line	A' - received data input to Burny 1250

ERROR MESSAGES

This section contains error messages, which may be displayed during operation. In some cases, the error is merely an incorrect number entry. Other error messages may indicate a hardware or software problem, which should not occur under any circumstances.

ERRORS FROM PROGRAM OPERATIONS

These errors can occur during any of the operations for the major program functions (**RUN**, **LOAD**, etc.).

DUPLICATE PROGRAM	When you select **LOAD** and enter a program number to be used in storing the data, it is checked to make sure that no other program already stored in memory has the same number. If a duplicate number is found, this error is displayed. Either use the **DELETE** function to erase the duplicate or enter a different program number for the new program.
PROGRAM LIST EMPTY	This error indicates that no programs are stored in memory. It occurs, for instance, when you use the **DELETE** function, and there are no programs to delete.
ENTER PROGRAM NUMBER	This message is displayed when a program number of **00000000** is entered for any function. Zero may not be used for a program number.
NO PROGRAM FOUND	This message is displayed if you select **RUN**, **DELETE**, or **STORE** and enter a program number that is not in memory. Correct the program number and re-enter it.
MEMORY DISABLED	This error can be displayed when you select any of the functions. It indicates that a potential power loss was detected and that program memory has been set to a protected state. This is done so that if a power loss does occur, the programs in memory remain intact. Press <RECYCLE> to re-enable and test the memory.
PROGRAM MEMORY FULL	This error is displayed when you select **LOAD** and program memory is full and cannot accept another program. Use the **DELETE** function to erase any unneeded programs and re-enter the desired function.
END OF LIST	This is not an error condition but merely a data display. It occurs in any function mode when you use the UP and DOWN scroll arrow keys to scroll through the list of available programs. This message is followed by the number of

bytes of memory currently used for program storage and the number remaining available for new programs.

0 BYTES IN PROGRAM This message is displayed if you select a program that has no program data in it and cannot run. This may occur if a program load is started but not completed. The program space was created in memory, but the program was never stored. Delete the program and either re-load it or run a different one.

RECYCLE ERRORS Each time you press <RECYCLE>, the main system memory used for storing part programs is checked for any data or format errors. If all tests pass, the main **SELECT FUNCTION** prompt is displayed. However, if an error is detected, this message is displayed. Press <RECYCLE> again to try to clear the error. If the memory can be reset, the usual **SELECT FUNCTION** prompt is displayed.

DATA ERROR - RESET MEMORY This message indicates that the program is invalid and unusable. To abort the reset operation, press the <+/-> key to make the word **NO** in the readout flash and press <ENTER>. This does not correct the problem however, and program memory is not reset. To reset memory and return to normal operation, press the <+/-> key to make the word **YES** in the readout flash, then press <ENTER>. When the reset operation is selected, a further prompt is issued to make sure that you realize this operation erases all programs in memory. To continue with the reset, press the <+/-> key to make the word **YES** in the readout flash, and then press <ENTER>.

RESET MODE ONLY Some operations cannot be used while others are running. If they are attempted at the wrong time, this message is displayed and the operation does not execute. To perform the desired operation, you must stop the current operation. Press <RECYCLE> and select the function again.

RUN TIME ERRORS

These error messages only appear while a part program is actually running.

PATH ERROR The **1250** constantly monitors the machine position while a part is being run. If it detects that the path has deviated by more that a preset value (selected during installation), it issues a warning message accompanied by a beeping

sequence. This warning does not stop the machine, but only warns you that the part being cut is not within the preset error distance.

ERRORS DURING SERIAL I/O OPERATIONS

Several conditions can occur during the SERIAL I/O operations that cause error messages to be displayed.

READ TIMEOUT This error indicates that the data being received by the **1250** stopped for longer than the nominal time-out value (60 seconds). The operation has been aborted.

WRITE TIMEOUT This error indicates that data transmission has been delayed due to an in-operative device being connected to the RS-232 port for longer than a the nominal time-out value (60 seconds).

PARITY ERROR This error indicates that during a serial operation, a parity error was detected and caused the operation to abort.

OVERRUN ERROR During data reception, if the data is transmitted too fast, or is sent at the wrong baud rate, an overrun error occurs and terminates the operation.

FRAMING ERROR During data reception, a received character with the wrong number of bits causes this error to be displayed and terminates the operation. This can occur if noise is present on the transmission line or if the wrong baud rate is used.

DATA COMM ERROR This error indicates that the handshaking controlling the communication did not work and that data was lost.

FORMAT ERROR If the program being received does not match the specified program format type (ESSI, Word Address, etc.) during a **LOAD** operation, this error message is displayed.

PROGRAM NUMBER WARNING When a **LOAD** operation is complete, the program number contained in the transmitted data is compared to the number you requested. If these two do not match, this warning is displayed. The program is loaded, however, as the number requested.

BLANK

RETROFIT AND INSTALLATION

GENERAL EXPLANATION OF A CNC RETROFIT

The main reason to add a **1250** control to a cutting machine is to increase productivity. The **1250** also eliminates the need to use a template, adds accuracy to the shape being cut, and makes the operator's job of cutting easier. A **1250** can be installed on almost any cutting machine with an X/Y coordinate drive system. The **1250** provides NC control with the capability of switching back to photocell control if desired.

The objective of this installation section is to graphically explain the mounting of necessary hardware used by the **1250** to run the cutting machine. Drawings are located at the end of this section that show the hardware that the **1250** uses and how it is mounted on a cutting machine. By using the drawings and following the specified rules for correct mounting procedure, it should be possible to mount the necessary hardware on almost any cutting machine.

It would be difficult to supply a drawing for every cutting machine, but this section gives the basic idea of the hardware mounting procedure. The actual method implemented by the customer is determined by the personal preference and added input from personnel involved in the project.

MOUNTING THE GEAR RACK

1. Always try to mount the gear rack teeth facing sideways or facing down. Mounting the rack with the teeth facing up causes the rack to accumulate cutting dirt and the teeth to become clogged, which may create dimensional errors.
2. Mount the gear rack directly to the machine, if possible. If this method does not allow for proper clearance or encoder mesh into the gear rack, another method must be used. For example, mount the gear rack on a separate angle bracket. By doing this, the gear rack is away from the cutting machine surface to give extra clearance for proper mesh. Washers or spacers can also be used to move the gear rack away from the cutting machine surface for added clearance.
3. Be sure that the gear rack covers the entire travel distance of both rail and cross axis. Allow enough rack at all travel limit ends so the encoder does not go off the end of the gear rack.
4. When joining two sections of rack, always use a short piece (about 2 or 3 inches) to obtain proper mesh between six foot rack sections. Invert the short piece of rack into the two sections that are being joined together, over the joint to obtain proper mesh. Do **NOT** butt two sections against each other; this causes an improper mesh and may result in dimensional errors on parts being cut.
5. Use whatever means possible to ensure that the gear rack is straight both horizontally and vertically. A bowed rack causes dimensional errors on parts being cut.

MOUNTING THE ENCODER

The **1250** uses digital encoders to provide a feedback pulse, which tells the **1250** exactly where it is at all times. Mounting the encoders incorrectly causes the **1250** to get false distance readings, which, in turn, causes the cut part to be the wrong size. The following rules are provided so that encoders are mounted correctly, ensuring that accurate feedback is supplied to the **1250**, which ensures the parts being cut are correct dimensionally.

1. Choose a suitable location for encoder mounting. Try to stay away from mounting the encoder in a vulnerable location, such as the end of a rail truck or next to the torches.
2. Always have the encoder parallel to the gear rack (see drawing # B0-19621). The distance from the center of the encoder shaft and distance from the center of the shoulder screw pivot should be the same distance to the gear rack.
3. On a bridge-type machine with a dual rail axis, always mount the rail encoder on the tracing table side, away from the cutting torch side.
4. On a cantilever machine, always mount the rail encoder on the center support beam. If possible, mount the rail axis encoder on the tracing table side, away from the cutting torch side.
5. If possible, mount the cross axis encoder to the cross axis drive gearbox. Mounting the encoder to the tracing eye is acceptable, but use this method only as a second choice.
6. Encoders come with a universal mounting bracket. (See Drawing # BO-19618). The mounting bracket configuration can be re-arranged to meet mounting requirements.
7. Always leave enough clearance from the top of the encoder housing to any part of the cutting machine. An encoder cable is plugged into the connector on top of the encoder housing. This calls for a 3-inch clearance from the top of the housing to any part of the cutting machine.
8. Encoders are spring-loaded with minimum tension into the gear rack. Encoders do not require a great amount of tension to hold them for proper mesh with the gear rack. Just enough tension to keep the encoder firmly meshed and to keep it from popping out of the rack will do. Too much tension will damage the encoder. A conventional tension or compression spring can be used to spring-load the encoder into the gear rack.
9. After the encoders are mounted, be sure to run the cutting machine to all maximum travel limits. Verify that nothing interferes with either encoder.
10. Avoid any sharp impacts to the encoder. Sharp impacts will damage the encoder.

DETERMINING CABLE LENGTH

1. Always determine the location of the **1250** and encoders before measuring for cable lengths. In general, the cable lengths that are needed depend on the application and what additional options are ordered with the **1250**.
2. When measuring for cables, do **NOT** measure in a straight line from point to point. Allow enough cable for proper routing with existing machine cables.
3. Encoder cables are always needed for the **1250** application. To determine the length of the encoders cables, first decide where the encoders will be mounted. Then measure the length from each encoder (X and Y) to the lower back panel of the **1250**. The two lengths normally will be different.
4. Generally, the cross axis encoder cable is longer then the rail axis encoder cable. Because the **1250** and the rail axis encoder are both stationary, the distance from the **1250** to the rail axis encoder is fixed. The cross axis encoder cable length is determined by measuring from the **1250** to the cross axis drive, where the encoder is mounted. This cable should be long enough to reach both limits of the axis.
5. The determination of cable lengths is very important. In general, always allow more (at least an extra 18 to 24 inches). Note that while it is important to make sure all cables are long enough, extremely long cables can act as an antenna for electrical noise.
6. For plasma cutting applications, all **1250** cables must be routed to keep them separated from any plasma cables by a minimum of two feet. This is done to minimize the possible damage caused by high frequency spikes produced by a plasma system.

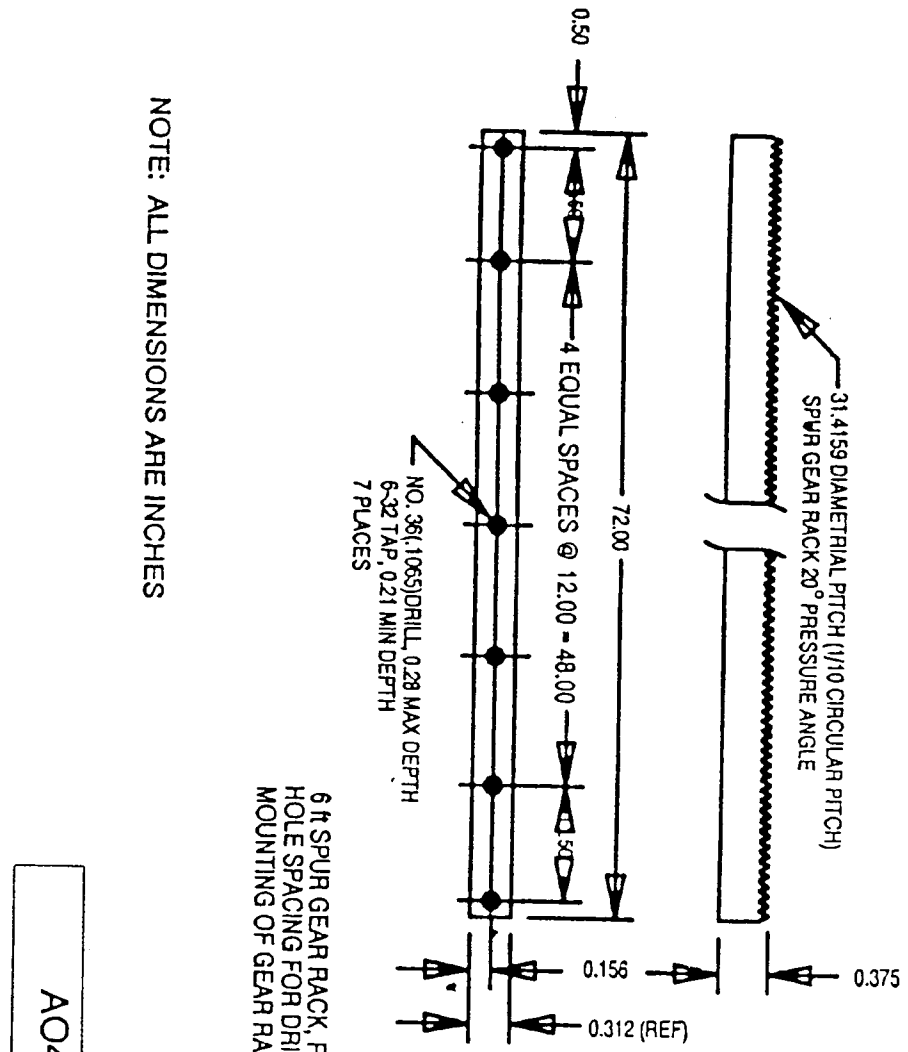
0.50
4 EQUAL SPACES @ 12.00 = 48.00
72.00
.50
31.4159 DIAMETRIAL PITCH (1/10 CIRCULAR PITCH)
SPUR GEAR RACK 20° PRESSURE ANGLE
NO. 36(.1065)DRILL 0.28 MAX DEPTH
6-32 TAP, 0.21 MIN DEPTH
7 PLACES
0.156
0.312 (REF)
0.375
6 ft SPUR GEAR RACK, RECOMMENDED
HOLE SPACING FOR DRILL & TAP
MOUNTING OF GEAR RACK
NOTE: ALL DIMENSIONS ARE INCHES
AO4-6982

NOTE:
1.) GEAR RACK CAN BE DRILLED & TAPPED OR WELDED TO ANGLE BRACKET. EXERCISE EXTREME CARE IF TACK WELD METHOD IS USED.

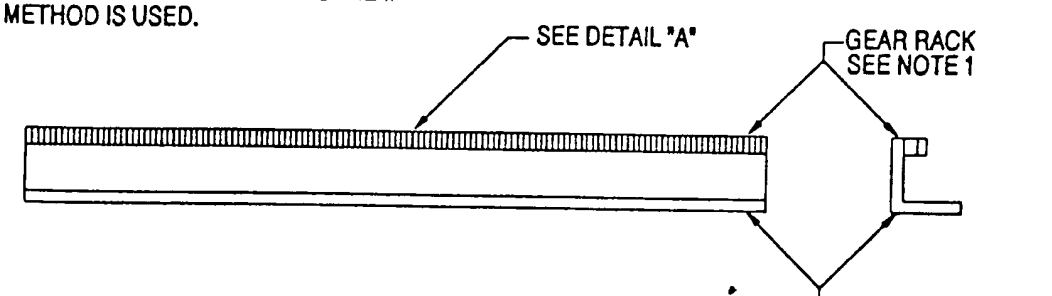

DETAIL "A"

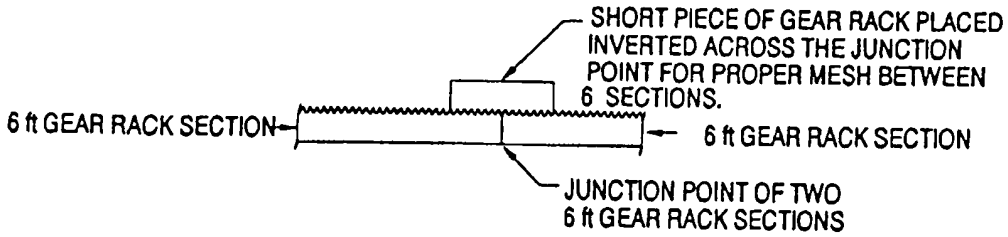

GEAR RACK BRACKET ASSEMBLY

B01-1684

NOTE:

1.) TYPICAL MOUNTING OF GEAR RACK ON ANGLE BRACKET. GEAR RACK TEETH SHOULD FACE DOWN OR TO THE LEFT OR RIGHT, NEVER FACING UP. THIS IS DONE TO PREVENT THE GEAR RACK FROM ACCUMULATING DUST & DIRT.

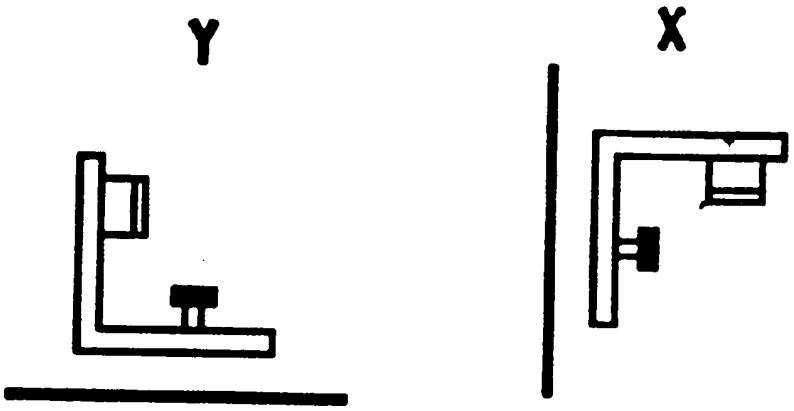

GEAR RACK BRACKET MOUNTING
UTILIZING ANGLE BRACKETS

AO-19617

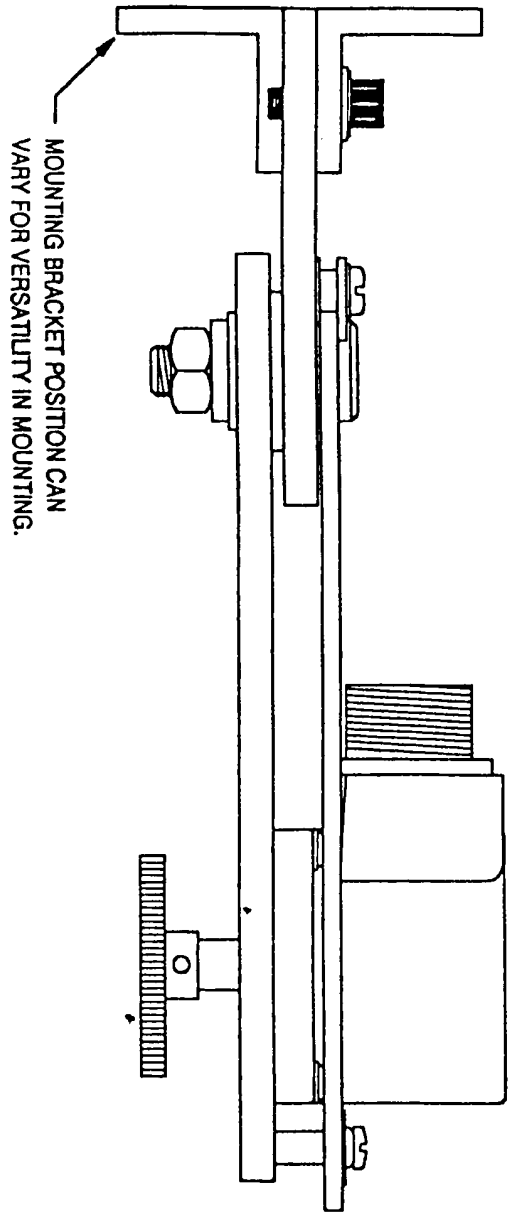

ENCODER AND BRACKET ASSEMBLY

BO-19618

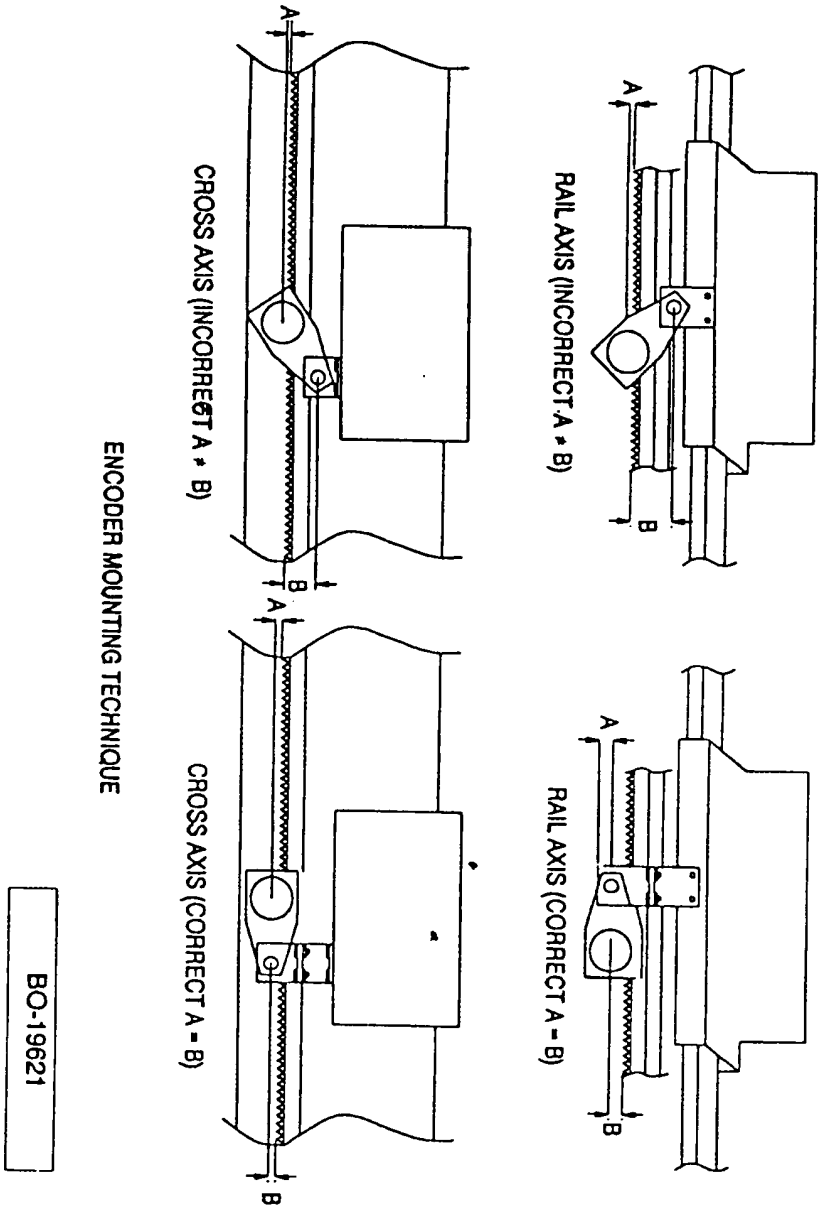

ENCODER MOUNTING TECHNIQUE

BO-19621

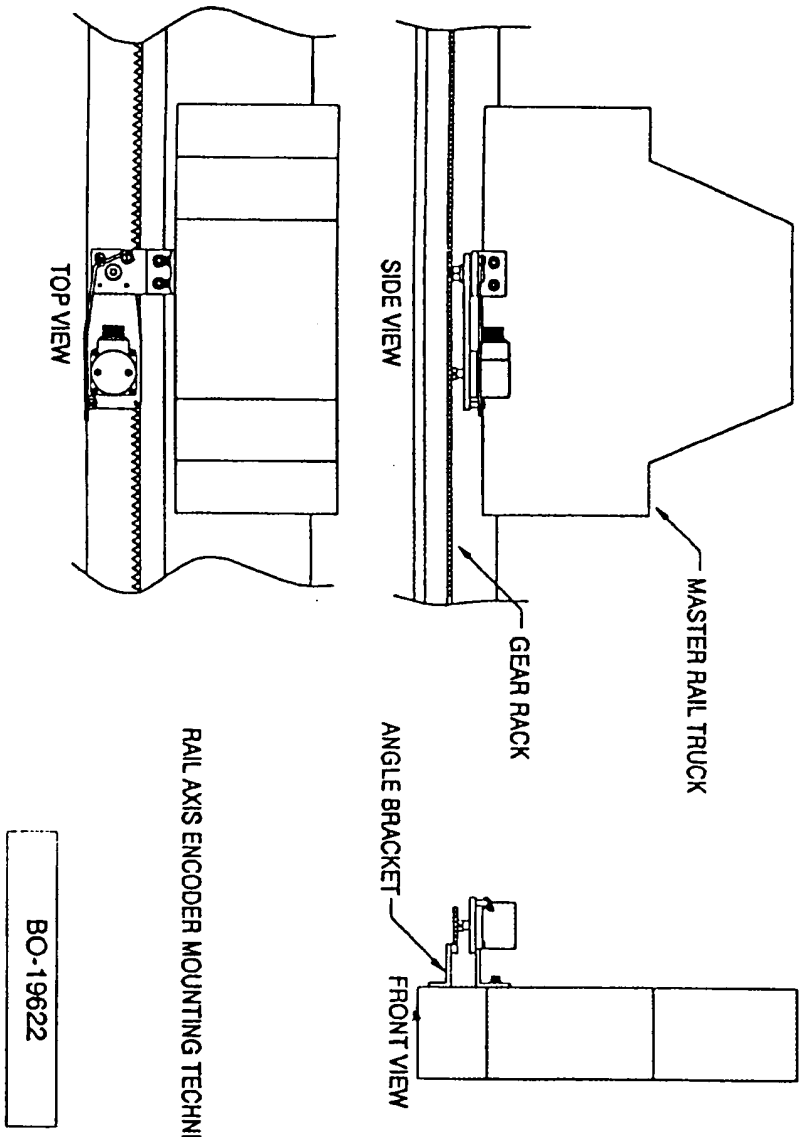
TOP VIEW
SIDE VIEW
MASTER RAIL TRUCK
GEAR RACK
ANGLE BRACKET
FRONT VIEW
RAIL AXIS ENCODER MOUNTING TECHNIQUE
BO-19622

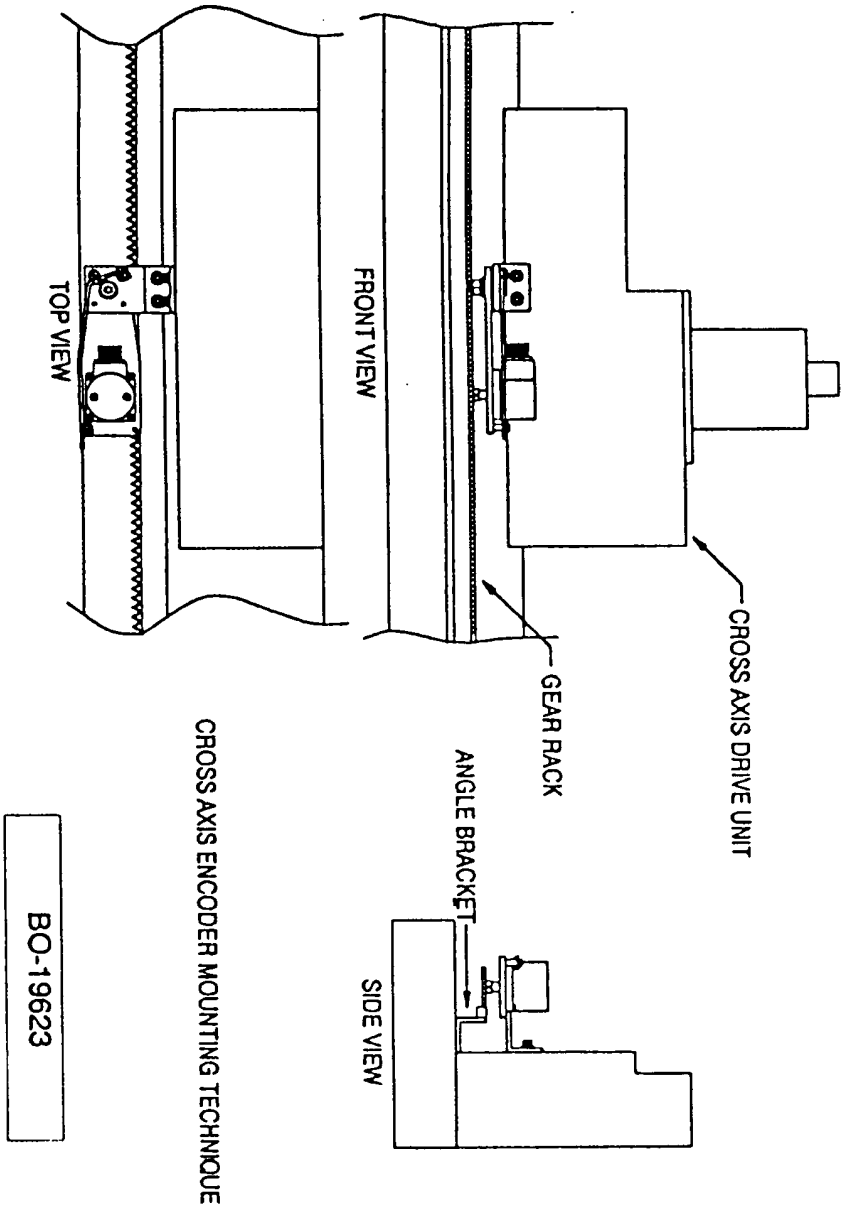
TOP VIEW
FRONT VIEW
CROSS AXIS DRIVE UNIT
GEAR RACK
ANGLE BRACKET
SIDE VIEW
CROSS AXIS ENCODER MOUNTING TECHNIQUE
BO-19623

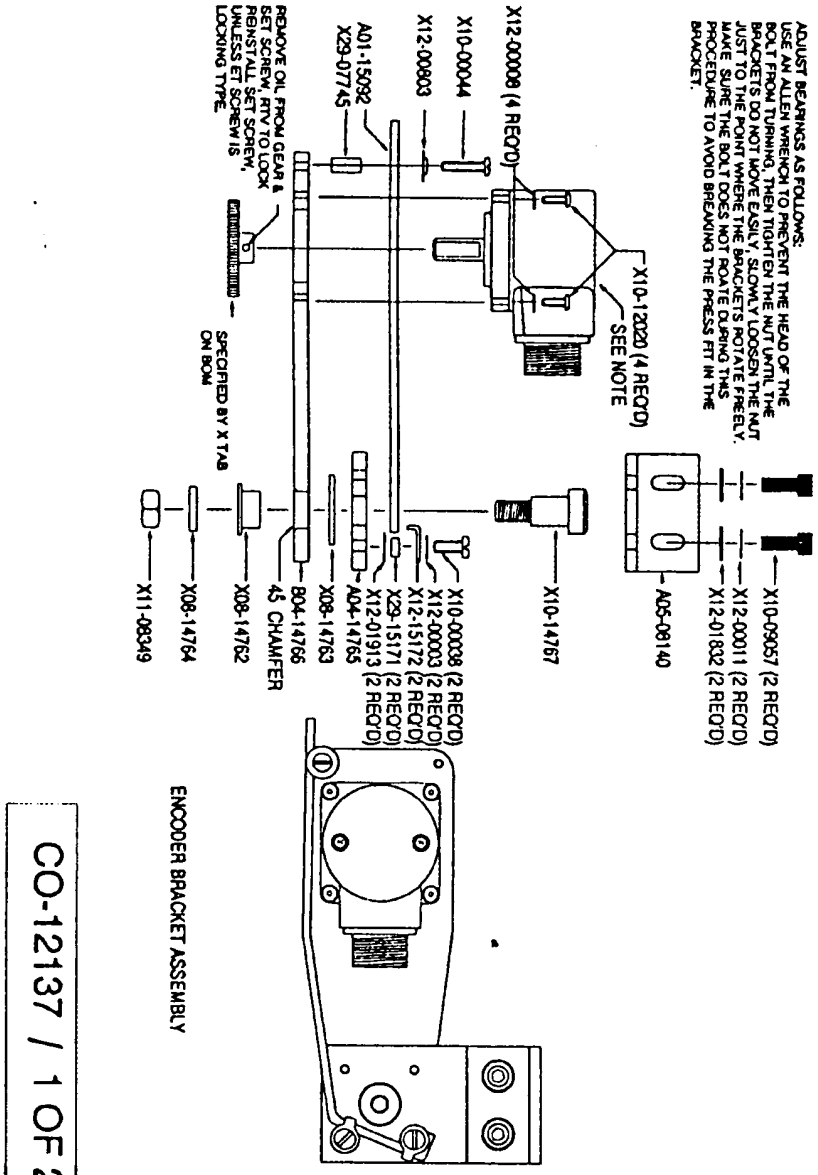

CO-12137 / 1 OF 2

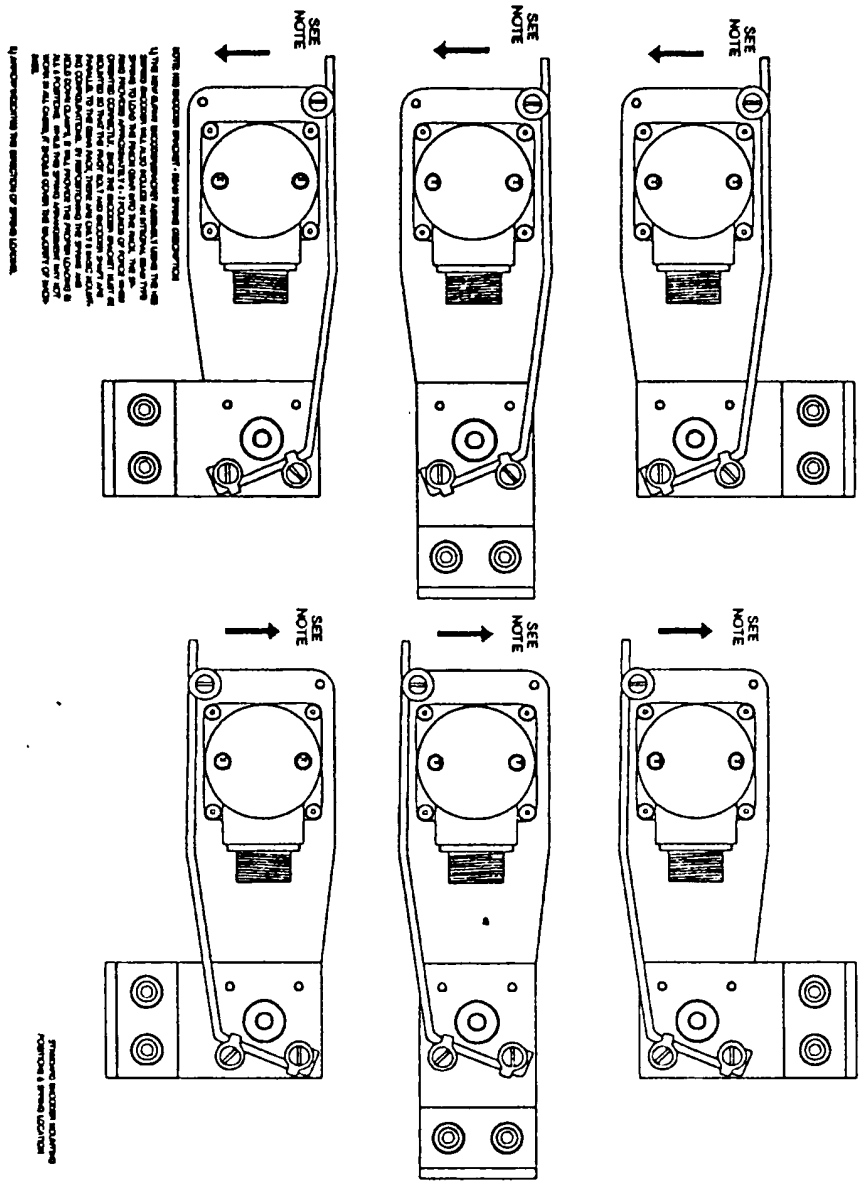
SEE NOTE
SEE NOTE
SEE NOTE
SEE NOTE
SEE NOTE
SEE NOTE

DRIVES AND CALIBRATION

SERVO DRIVE ADJUSTMENTS (120 Watt PWM Drive MO-10773)

WARNING: Do not plug the motor/encoder cables into the unit. Set the line voltage jumper on the Relay Card MO-10727 to match the incoming line voltage. Apply power and turn to release the emergency stop on the side of the control. **Severe damage to the control can occur if the line voltage jumper is set incorrectly.**

When necessary, perform the following adjustments:

1. **CNC Parameters:** Set SD08 MIN HOLD SPEED to 0.00 while performing the Servo Drive adjustments so the **1250** cannot influence the calibration.

2. **CNC Interface Card Jumper:** Set the FEEDRATE Jumper J3 to the analog feedrate position for the **1250**.

3. **CNC Interface Card Adjustments:** With the speedpot at maximum and the range selector in the HIGH position, connect a DC voltmeter between the COM test point and the center pin of jumper J4. Adjust P1 analog to digital reference until the meter reads 7.20 VDC (±0.01 VDC). Connect a DC voltmeter between the COM test point and the bottom side of resistor R9 on the Interface Card MO-10796. Set the feedrate for maximum. Perform a maintained jog in the rail (X) axis. Adjust the rail output pot (P2) until the voltage reads 3.00 VDC (±0.01 VDC). Move the voltmeter to the bottom side of resistor R10. Perform a maintained jog in the cross (Y) axis. Adjust the cross output pot (P3) until the voltage reads 3.00 VDC (±0.01 VDC). Stop the jog mode. Push in the Emergency Stop.

4. **Motor Tachometer Polarity Verification:** Hook up the motor/encoder pigtails to the motor/encoder cables and plug the cables into the **1250**. Turn to release the emergency stop. If the motors run away, verify that the tachometer wiring is intact. If the wiring looks unbroken, then push in the Emergency Stop and reverse the tachometer wiring. Turn to release the Emergency Stop on the side of the control. This should correct the run-away condition.

5. **Deadband Adjustment (P12, P13):** Connect a DC voltmeter between M1 and M2 on the rail motor. Short COM (TP1) to X (TP2) on the Drive Card MO-10773. Set the feedrate for maximum. Perform a maintained jog in the rail (X) axis. Adjust the rail deadband pot XD (P12) until voltage appears on the meter, then back off until the voltage is 0.01 VDC (±0.001 VDC). Repeat the procedure with the cross (Y) motor by shorting COM (TP1) to Y (TP3) and adjusting the cross deadband pot YD (P13). Stop the jog mode. Remove shorts.

6. **Offset Adjustment (P4, P5):** Connect a DC voltmeter between motor terminals M1 and M2. With power on and the emergency stop released, note any movement in the axes' motors or any voltage on the meter. Adjust the rail offset pot XO (P4) to remove any drift in the rail motor. Adjust the cross offset pot YO (P5) to remove any drift in the cross motor.

7. **Velocity Adjustment (P10, P11):** Jog the machine in the rail (X) direction while monitoring the machine speed. This can be done by performing a SERVICE MODE 50 AXIS SPEED DISPLAY with the CNC as long the encoder parameters have been entered. Adjust XV (P10) for maximum desired speed. Repeat for cross (Y) direction using YV (P11) to adjust speed. Reset SD08 MIN HOLD SPEED to the original value.

8. **Current Adjustment (P1):** Place J1 in the "4A" position. Connect a DC voltmeter between COM (TP1) and Pin 5 of the Interface Card. Adjust P1 for +1.25 V (±0.01 V).

9. **Stability Adjustment (P6, P7):** Adjust the rail stability pot XS (P6) and the cross stability pot YS (P7) clockwise until the motors run quietly (no unstable, high frequency noise). Test the drives at various speeds and at zero speed to verify the stability is adjusted correctly.

10. **Notch Filter adjustment (P8, P9):** The notch filter is used to remove low frequency oscillations that may occur when the machine makes sudden changes in direction, such as when maneuvering a corner. The filters can be put into or left out of the loop by selecting the appropriate jumper settings on PL2 (See JUMPER SETTINGS below). Adjust the rail notch filter pot XN (P8) and the cross notch filter pot YN (P9) until the notch filters eliminate the machine oscillation. The adjustments may be different for the rail and the cross axis.

JUMPER SETTINGS (120 Watt PWM Drive MO-10773)

J1: Selects the maximum continuous operating current of the drive. Select **4A** (4 Amps).

J2: Selects the type of limit switch contacts on the machine. Select either **NO** (normally open) or **NC** (normally closed), which refers to the state of the contacts when the machine is not on a limit switch.

J3: Selects between **BRAKE** or **COAST** to a stop when a limit switch is encountered.

J4: Select position **B**.

J5: Select position **B**.

J6: Select position **A**.

J7: Selects the type of control: position **A** if there is a tracer or position **B** if there is not a tracer. Select position **B**.

Option Plug (PL2) Jumper Settings	
CONFIGURATION	PL2 JUMPER SETTINGS
No Notch Filters	Jumper: 1-3, 2-4, 5-7, 6-8
With Notch Filters	Jumper: 1-3, 5-7, 13-14, 15-16

ACCELERATION TIME (PART-6:INSTAL-5),
(PART-6:INSTAL-8),
(PART-6:INSTAL-27),
(PART-6:INSTAL-31),
(PART-6:INSTAL-32),
(PART-6:EXAMPLE-2),
(PART-6:EXAMPLE-5)
ARC OFF DELAY (PART-6:INSTAL-5),
(PART-6:INSTAL-12)
ARC ON DELAY (PART-6:INSTAL-7),
(PART-6:INSTAL-36)
ARC ON SENSE (PART-7:MACHINE-3)
AUTO CUT (PART-2:RUN-3), (PART-2:RUN-4),
(PART-2:RUN-8)
AUTOMATIC REFERENCE ADJUSTMENT
(PART-6:INSTAL-41),
(PART-6:EXAMPLE-4)
AXIS SPEED (PART-6:INSTAL-39)
AXIS SPEED DISPLAY (PART-6:INSTAL-39)
BACKUP SPEED (PART-4:WADR-3)
(PART-4:ESSI-2),
(PART-6:INSTAL-5),
(PART-6:INSTAL-8),
(PART-6:EXAMPLE-2)
BLEED-OFF TIME (PART-6:INSTAL-1),
(PART-6:INSTAL-5),
(PART-6:INSTAL-7),
(PART-6:INSTAL-16),
(PART-6:EXAMPLE-1)
BP INPUT (PART-6:INSTAL-36)
BP OUT (PART-6:INSTAL-36)
CAD LINK (PART-5:SERIAL-17)
CHARACTER FORMATS (PART-5:SERIAL-1),
(PART-5:SERIAL-13)
COMMUNICATION ENHANCEMENT OPTION
(PART-5:SERIAL-1),
(PART-5:SERIAL-15),
(PART-5:SERIAL-16)
CONNECTING TO RS-232C (PART-5:SERIAL-5)
CORNER SPEED (PART-6:INSTAL-5),
(PART-6:INSTAL-8),
(PART-6:INSTAL-9),
(PART-6:INSTAL-15),
(PART-6:INSTAL-31),
(PART-6:EXAMPLE-2)
CUSTOM AUX (PART-4:PROG-1),
(PART-5:SERIAL-20),
(PART-6:INSTAL-3),
(PART-6:INSTAL-20),
(PART-6:INSTAL-40),
(PART-6:INSTAL-41),
(PART-6:INSTAL-42),
(PART-6:INSTAL-45)
CUTTING MODE (PART-2:RUN-1),
(PART-2:RUN-3),
(PART-2:RUN-6),
(PART-2:RUN-9),
(PART-3:SPCFNC-3),
(PART-6:INSTAL-3)
CUTTING SELECTION (PART-3:SPCFNC-1)
DATA ERROR (PART-8:ERROR-2)
DEFAULT DWELL (PART-4:WADR-6),
(PART-6:INSTAL-6),
(PART-6:INSTAL-16),
(PART-6:INSTAL-31)
DIAL-IN-KERF (PART-2:RUN-3),
(PART-4:WADR-6),
(PART-4:WADR-7),
(PART-4:WADR-14),
(PART-4:ESSI-3),
(PART-4:ESSI-6)
DIMENSIONS COMMON (PART-2:SHAPES-2)
DISPLAY (PART-3:DSPY-1)
DISPLAY KEY (PART-1:OPER-2)
DISPLAY MODES (PART-3:DSYP-1)
CONFIG (PART-3:DSPY-1),
(PART-3:DSPY-2)
EXIT MODE (PART-3:DSYP-1)
FEEDRATE (PART-3:DSPY-1),
(PART-3:DSPY-2)
PARTS CUT (PART-3:DSPY-1)
SERVICE DISPLAYS (PART-3:DSPY-1),
(PART-3:DSPY-2)
STATUS (PART-3:DSPY-1), (PART-3:DSPY-2)
X/Y DISPLAY (PART-3:DSPY-1)
DOUBLE WORD MEMORY (PART-6:INSTAL-38)
DSPY VAR (PART-3:DSPY1), (PART-6:INSTAL-33)
DSPY00 EXIT MODE (PART-6:INSTAL-3)
DSPY02 PARTS CUT (PART-6:INSTAL-4)
DSPY03 FEEDRATE (PART-6:INSTAL-4)
DSPY10 SYS DATA (PART-6:INSTAL-4)
EDITOR (PART-3:EDIT-1)
ARC DIRECTION (PART-3:EDIT-3)
COMMANDS (PART-3:EDIT-2)
DELETING (PART-3:EDIT-4)
DISPLAY (PART-3:EDIT-1)
FUNCTION BLOCK (PART-3:EDIT-3)
INSERTING (PART-3:EDIT-4)
LINE/ARC BLOCK EDIT (PART-3:EDIT-2)
PROGRAM EDIT (PART-3:EDIT-1)
SAMPLE PROGRAM (PART-3:EDIT-11)
TERMINATING (PART-3:EDIT-5)
VERIFY (PART-3:EDIT-3)
ENC COUNTS/REV (PART-6:INSTAL-13)
ERROR MESSAGES (PART-8:ERROR-1)
0 BYTES (PART-8:ERROR-2)
DATA COMM (PART-8:ERROR-3)
DATA ERROR (PART-8:ERROR-2)
DUPLICATE (PART-8:ERROR-1)
END OF LIST (PART-8:ERROR-1)
ENTER PROGRAM NUMBER
(PART-8:ERROR-1)
FORMAT (PART-8:ERROR-3)
FRAMING (PART-8:ERROR-3)
MEMORY DISABLED (PART-8:ERROR-1)
MEMORY FULL (PART-8:ERROR-1)
NO PROGRAM (PART-8:ERROR-1)
OVERRUN (PART-8:ERROR-3)
PATH ERROR (PART-8:ERROR-2)
PROGRAM LIST EMPTY (PART-8:ERROR-1)
PROGRAM NUMBER (PART-8:ERROR-3)
READ TIME-OUT (PART-8:ERROR-3)
RESET MODE (PART-8:ERROR-2)
RUN TIME (PART-8:ERROR-2)
SERIAL I/O (PART-8:ERROR-3)
WRITE TIME-OUT (PART-8:ERROR-3)
ERROR SPEED MAXIMUM (PART-6:INSTAL-5),
(PART-6:INSTAL-10)
ERROR WARNING DISTANCE (PART-6:INSTAL-5),
(PART-6:INSTAL-11),
(PART-6:EXAMPLE-2)
ESSI PROGRAMMING (PART-4:ESSI-1)
AUXILIARY FUNCTIONS (PART-4:ESSI-2)
LINE AND ARC BLOCK (PART-4:ESSI-1)
PROGRAMMING (PART-4:ESSI-1)
SAMPLE PROGRAM (PART-4:ESSI-5)
EXAMPLE DESCRIPTION (PART-6:EXAMPLE-1)
EXIT MODE (PART-1:OPER-2), (PART-3:DSPY-1),
(PART-3:SPCFNC-1),
(PART-6:INSTAL-3),
(PART-6:INSTAL-5)
FEEDRATE (PART-1:OPER-3), (PART-3:EDIT-9),
(PART-3:DSPY-1),

(PART-3:DSPY-2),
(PART-4:WADR-6),
(PART-4:WADR-14),
(PART-4:ESSI-3),
(PART-6:INSTAL-3),
(PART-6:INSTAL-4),
(PART-6:INSTAL-16),
(PART-6:INSTAL-19),
(PART-6:INSTAL-25),
(PART-6:INSTAL-32),
(PART-6:INSTAL-33),
(PART-6:INSTAL-41),
(PART-6:INSTAL-44),
(PART-6:EXAMPLE-4)
FILE DATA (PART-5:SERIAL-17),
(PART-5:SERIAL-19)
FILE EXTEN (PART-3:FLOPPY-1),
(PART-3:FLOPPY-3),
(PART-6:INSTAL-6),
(PART-6:INSTAL-24)
FILE GET (PART-3:SERIAL-17),
(PART-5:SERIAL-18),
(PART-5:SERIAL-19)
FILE QUEUE (PART-5:SERIAL-17),
(PART-5:SERIAL-19)
FILE QUIT (PART-5:SERIAL-17),
(PART-5:SERIAL-18),
(PART-5:SERIAL-19)
FLOPPY
FLOPPY UTILITIES DISK
(PART-3:FLOPPY-1)
LOADING FILES (PART-3:FLOPPY-2)
SAVING FILES (PART-3:FLOPPY-3)
SERIAL CONNECTION (PART-3:FLOPPY-2)
FLOPPY DISK DRIVES (PART-3:FLOPPY-1)
FUNCTION SELECTION (PART-2:MENU-1)
DELETE PROGRAM (PART-2:MENU-3)
EDIT/NEW PROGRAM (PART-2:MENU-3)
LOAD FROM FLOPPY (PART-2:MENU-3)
LOAD FROM RS-232 (PART-2:MENU-2)
LOAD FROM STD SHAPE (PART-2:MENU-2)
RUN PROGRAM (PART-2:MENU-2)
STORE FROM RS-232 (PART-2:MENU-2)
STORE TO FLOPPY (PART-2:MENU-3)
GAIN BREAK (PART-6:INSTAL-5),
(PART-6:INSTAL-11),
(PART-6:INSTAL-31),
(PART-6:EXAMPLE-2)
GENERAL OPERATIONS (PART-1:OPER-1)
AXIS DEFINITIONS (PART-1:OPER-1)
BACK UP (PART-1:OPER-4)
CUTTING SPEED(PART-1:OPER-3)
JOG (PART-1:OPER-3)
KEYPAD (PART-1:OPER-1),
(PART-1:OPER-2)
LANGUAGE (PART-1:OPER-1)
PART RETURN (PART-1:OPER-4)
RECYCLE (PART-1:OPER-2)
SCROLL ARROW KEYS (PART-1:OPER-3)
GEOMETRY MODIFICATION (PART-2:RUN-1)
PART ROTATION (PART-2:RUN-2)
SCALING (PART-2:RUN-2)
X/Y AXIS MIRROR (PART-2:RUN-2)
GO HOME (PART-3:EDIT-9), (PART-3:SPCFNC-1),
(PART-3:SPCFNC-5)
GO HOME MENU (PART-3:SPCFNC-5)
HANDSHAKING PROTOCOL (PART-5:SERIAL-13),
(PART-6:INSTAL-45)
HARDWARE HANDSHAKING (PART-5:SERIAL-5),
(PART-5:SERIAL-7),
(PART-5:SERIAL-13),
(PART-5:SERIAL-15)
HEIGHT CONTROL (PART-6:INSTAL-14)
HEIGHT DISABLE (PART-3:SPCFNC-3),
(PART-3:SPCFNC-4),
(PART-6:INSTAL-44),
(PART-6:EXAMPLE-3),
(PART-7:MACHINE-3),
(PART-7:MACHINE-4)
HEIGHT RELAY (PART-6:INSTAL-5),
(PART-6:INSTAL-14),
(PART-6:EXAMPLE-3)
HIGH PREHEAT (PART-2:RUN-4),
(PART-2:RUN-7),
(PART-3:SPCFNC-3)
HOME INDEX SWITCH (PART-6:INSTAL-30)
HOME POSITION (PART-1:OPER-4),
(PART-2:RUN-9),
(PART-3:SPCFNC-5),
(PART-3:SPCFNC-6),
(PART-3:SPCFNC-7),
(PART-3:SPCFNC-8),
(PART-4:WADR-5),
(PART-4:WADR-12)
(PART-4:ESSI-4),
(PART-6:INSTAL-6),
(PART-6:INSTAL-30)
INSTALLATION AND SETUP (PART-6:INSTAL-1)
ACCELERATION TIME (PART-6:INSTAL-8)
ARC OFF DELAY (PART-6:INSTAL-12)
ARC ON DELAY (PART-6:INSTAL-7)
AUTOMATIC REFERENCE ADJUSTMENT
(PART-6:INSTAL-40)
AXIS SPEED (PART-6:INSTAL-39)
AXIS SPEED DISPLAY (PART-6:INSTAL-39)
BACKUP SPEED (PART-6:INSTAL-8)
BLEED-OFF TIME (PART-6:INSTAL-7)
BP INPUT (PART-6:INSTAL-36)
BP OUT (PART-6:INSTAL-36)
CORNER SPEED (PART-6:INSTAL-8)
CUSTOM AUX (PART-6:INSTAL-41)
DEFAULT DWELL (PART-6:INSTAL-16)
DISPLAY (PART-6:INSTAL-2)
DOUBLE WORD MEMORY
(PART-6:INSTAL-38)
DSPY VAR (PART-6:INSTAL-33)
ENC COUNT/REV (PART-6:INSTAL-13)
ERROR SPEED MAXIMUM
(PART-6:INSTAL-10)
ERROR WARNING DISTANCE
(PART-6:INSTAL-11)
EXIT MODE (PART-6:INSTAL-3)
FEEDRATE (PART-6:INSTAL-4)
FILE EXTEN (PART-6:INSTAL-24)
GAIN BREAK (PART-6:INSTAL-11)
HEIGHT RELAY (PART-6:INSTAL-14)
HOME INDEX SWITCH (PART-6:INSTAL-30)
KNIFE BP ANGLE (PART-6:INSTAL-29)
KNIFE DIA. (PART-6:INSTAL-29)
LOOP BACK (PART-6:INSTAL-45)
LOOP GAIN (PART-6:INSTAL-11)
MARKER DELAY (PART-6:INSTAL-16)
MARKING SPEED (PART-6:INSTAL-16)
MAX SLW ANG (PART-6:INSTAL-15)
MAXIMUM DRIVE SPEED
(PART-6:INSTAL-8)
MEM RESET (PART-6:INSTAL-40)
MEMORY DISPLAY (PART-6:INSTAL-36)
MEMORY RESET (PART-6:INSTAL-40)
MIN OFF DELAY (PART-6:INSTAL-16)
MIN RAD SPED (PART-6:INSTAL-15)
MIN SLW ANG (PART-6:INSTAL-15)
MINIMUM HOLD SPEED (PART-6:INSTAL-9)
MULTIPLE SETUP (PART-6:INSTAL-31)

OPERATING SYSTEM (PART-6:INSTAL-24)
PARAMETER MENU (PART-6:INSTAL-7)
PARTS CUT (PART-6:INSTAL-4)
PLASMA TB1 (PART-6:INSTAL-15)
PLATE SIDE (PART-6:INSTAL-14)
POWER UP (PART-6:INSTAL-2)
PROGRAM FORMAT (PART-6:INSTAL-19)
PROGRAMMABLE OFFSETS (PART-6:INSTAL-29)
RADERR (PART-6:INSTAL-35)
RADSCL (PART-6:INSTAL-35)
REF ADJUST (PART-6:INSTAL-40)
RUN SPD LIMIT (PART-6:INSTAL-10)
SERIAL DEFINITION (PART-6:INSTAL-17)
SERVICE MODE (PART-6:INSTAL-1), (PART-6:INSTAL-3)
SHOW BYTE (PART-6:INSTAL-38)
SHOW CRUB (PART-6:INSTAL-39)
SHOW DBLE (PART-6:INSTAL-38)
SHOW WORD (PART-6:INSTAL-37)
SINGLE BYTE MEMORY DISPLAY (PART-6:INSTAL-38)
SINGLE WORD MEMORY (PART-6:INSTAL-37)
SLOWDOWN DISTANCE (PART-6:INSTAL-12)
SLOWDOWN RADIUS (PART-6:INSTAL-14)
SPECIAL EOP (PART-6:INSTAL-22)
SPEED CALIBRATION (PART-6:INSTAL-39)
SPEED RANGE (PART-6:INSTAL-28)
START DELAY (PART-6:INSTAL-16)
SYS DATA (PART-6:INSTAL-4)
SYS RESET (PART-6:INSTAL-46)
SYSTEM CONFIGURATION (PART-6:INSTAL-25)
SYSTEM CONFIGURATION #2 (PART-6:INSTAL-25)
SYSTEM DATA (PART-6:INSTAL-4)
SYSTEM VARIABLE DISPLAY (PART-6:INSTAL-33)
TRAVERSE SPEED LIMIT (PART-6:INSTAL-10)
V01-X DRIVE (PART-6:INSTAL-33)
VARIABLE STORE (PART-6:INSTAL-45)
X ABS (PART-6:INSTAL-34)
X DRIVE DIR (PART-6:INSTAL-13)
X ENC (PART-6:INSTAL-34)
X ENC DIST/REV (PART-6:INSTAL-13)
X ENCODER DIRECTION (PART-6:INSTAL-13)
X ERROR (PART-6:INSTAL-34)
X HOME (PART-6:INSTAL-34)
X MARKER OFFSET (PART-6:INSTAL-15)
X/Y DISPLAY (PART-6:INSTAL-4)
XCNTR (PART-6:INSTAL-36)
XDAOUT (PART-6:INSTAL-33)
XERSCL (PART-6:INSTAL-34)
Y ABS (PART-6:INSTAL-35)
Y DRIVE (PART-6:INSTAL-34)
Y DRIVE DIRECTION (PART-6:INSTAL-13)
Y ENC (PART-6:INSTAL-35)
Y ENC DIST/REV (PART-6:INSTAL-13)
Y ENCODER DIR (PART-6:INSTAL-13)
Y ERROR (PART-6:INSTAL-35)
Y HOME (PART-6:INSTAL-35)
Y MARKER OFFSET (PART-6:INSTAL-16)
YCNTR (PART-6:INSTAL-36)
YDAOUT (PART-6:INSTAL-35)
YERSCL (PART-6:INSTAL-35)
KERF (PART-2:SHAPES-2), (PART-2:SHAPES-3), (PART-2:SHAPES-5), (PART-2:SHAPES-6), (PART-2:SHAPES-7), (PART-2:SHAPES-8), (PART-2:SHAPES-9), (PART-2:SHAPES-10), (PART-2:SHAPES-11), (PART-2:SHAPES-12), (PART-2:SHAPES-13), (PART-2:SHAPES-14), (PART-2:SHAPES-15), (PART-2:SHAPES-16), (PART-2:SHAPES-17), (PART-2:SHAPES-18), (PART-2:SHAPES-19), (PART-2:SHAPES-20), (PART-2:SHAPES-21), (PART-2:SHAPES-22), (PART-2:SHAPES-23), (PART-2:SHAPES-24), (PART-2:SHAPES-25), (PART-2:SHAPES-26), (PART-2:SHAPES-27), (PART-2:SHAPES-28), (PART-2:SHAPES-29), (PART-2:SHAPES-30), (PART-2:SHAPES-31), (PART-2:SHAPES-32), (PART-2:SHAPES-33), (PART-2:SHAPES-34), (PART-2:SHAPES-35), (PART-2:SHAPES-36), (PART-2:SHAPES-37), (PART-2:SHAPES-38), (PART-2:SHAPES-39), (PART-2:SHAPES-40), (PART-2:SHAPES-41), (PART-2:SHAPES-42), (PART-2:SHAPES-43), (PART-2:SHAPES-44), (PART-2:SHAPES-45), (PART-2:SHAPES-46), (PART-2:SHAPES-47), (PART-2:SHAPES-48), (PART-2:SHAPES-49), (PART-2:SHAPES-50), (PART-2:SHAPES-51), (PART-2:SHAPES-52), (PART-2:SHAPES-53), (PART-2:SHAPES-54), (PART-2:SHAPES-55), (PART-2:SHAPES-56), (PART-2:SHAPES-57), (PART-2:SHAPES-PART-2:RUN-3)
(PART-3:EDIT-6), (PART-3:EDIT-8), (PART-3:EDIT-9),
(PART-4:WADR-4), (PART-4:WADR-6), (PART-4:WADR-7), (PART-4:WADR-13), (PART-4:WADR-14),
(PART-4:ESSI-3), (PART-4:ESSI-5), (PART-4:ESSI-6),
(PART-6:INSTAL-19), (PART-6:INSTAL-25), (PART-6:INSTAL-32), (PART-6:INSTAL-42), (PART-6:INSTAL-43)
KEY CHARACTER DESCRIPTIONS (PART-4:WADR-1)
KNIFE BP ANGLE (PART-6:INSTAL-6), (PART-6:INSTAL-29)

KNIFE COMPENSATION (PART-2:RUN-3),
(PART-6:INSTAL-29)
KNIFE DIA. (PART-6:INSTAL-6),
(PART-6:INSTAL-29)
LIMIT SWITCHES (PART-3:SPCFNC-7),
(PART-6:INSTAL-25)
LOAD- FROM RS-232 (PART-2:MENU-2),
(PART-5:SERIAL-15),
(PART-5:SERIAL-16)
LOOP BACK (PART-6:INSTAL-45)
LOOP GAIN (PART-6:INSTAL-5),
(PART-6:INSTAL-11),
(PART-6:INSTAL-12),
(PART-6:INSTAL-31),
(PART-6:INSTAL-34),
(PART-6:INSTAL-35),
(PART-6:EXAMPLE-2),
(PART-6:EXAMPLE-4)
MACHINE INTERFACE (PART-7:MACHINE-1)
MANUAL CONTROL (PART-3:SPCFNC-1),
(PART-3:SPCFNC-2),
(PART-3:SPCFNC-3),
(PART-3:SPCFNC-4),
(PART-3:SPCFNC-5)
MANUAL CUT (PART-2:RUN-3),
(PART-2:RUN-8)
MANUAL OXY/FUEL (PART-2:RUN-7)
MARKER DELAY (PART-6:INSTAL-16)
MARKING SPEED (PART-6:INSTAL-16)
MAX SLW ANG (PART-6:INSTAL-15)
MAXIMUM DRIVE SPEED (PART-6:INSTAL-8)
MEM RESET (PART-6:INSTAL-40)
MEMORY DISPLAY (PART-6:INSTAL-36)
MEMORY RESET (PART-6:INSTAL-40)
MIN OFF DELAY (PART-6:INSTAL-16)
MIN RAD SPD (PART-6:INSTAL-15),
(PART-6:INSTAL-31),
(PART-6:EXAMPLE-3),
(PART-6:EXAMPLE-5)
MIN SLW ANG (PART-6:INSTAL-15),
(PART-6:INSTAL-31),
(PART-6:EXAMPLE-3)
MINIMUM HOLD SPEED (PART-6:INSTAL-9)
MIRROR (PART-2:RUN-2), (PART-2:RUN-3)
MULTIPLE SETUP (PART-6:INSTAL-31),
(PART-6:INSTAL-32)
OPERATING SYSTEM (PART-6:INSTAL-24)
OXY ENABLE (PART-3:SPCFNC-2)
OXY PRHT/CUT (PART-3:SPCFNC-2)
OXY START (PART-3:SPCFNC-3)
OXYGEN/FUEL (PART-2:RUN-1),
(PART-2:RUN-4),
(PART-2:RUN-7),
(PART-2:RUN-8),
(PART-3:SPCFNC-1),
(PART-3:SPCFNC-2),
(PART-6:INSTAL-1),
(PART-6:INSTAL-7),
(PART-6:INSTAL-12),
(PART-6:EXAMPLE-2),
OXYGEN SWITCH (PART-3:SPCFNC-2)
PARAMETER MENU (PART-6:INSTAL-7)
PARITY ERROR (PART-5:SERIAL-21),
(PART-8:ERROR-3)
PART COUNT (PART-2:RUN-4)
PART ROTATION (PART-2:RUN-2)
PARTS CUT (PART-3:DSPY-1),
(PART-6:INSTAL-4)
PIERCE RAMP (PART-2:RUN-3),
(PART-2:RUN-4),
(PART-2:RUN-7)
PLASMA ARC ON INPUT (PART-7:MACHINE-3)
PLASMA CUT (PART-2:RUN-7),
(PART-3:SPCFNC-3),
(PART-3:SPCFNC-4)
PLASMA CUT/JOG (PART-3:SPCFNC-4)
PLASMA CUTTING (PART-2:RUN-4),
(PART-2:RUN-8),
(PART-6:INSTAL-1),
(PART-6:INSTAL-7),
(PART-6:INSTAL-12),
(PART-6:INSTAL-15)
PLASMA ENABLE (PART-3:SPCFNC-3)
(PART-3:SPCFNC-4)
PLASMA MANUAL CONTROL (PART-3:SPCFNC-3)
PLASMA TB1 (PART-6:INSTAL-15)
PLASMA-OXYGEN/FUEL (PART-2:RUN-1)
PLATE ALIGNMENT (PART-2:RUN-5)
PREHEAT (PART-2:RUN-4), (PART-3:SPCFNC-3),
(PART-3:SPCFNC-4),
(PART-6:INSTAL-27),
(PART-6:INSTAL-28),
(PART-6:INSTAL-35)
PROGRAM FORMAT (PART-4:PROG-1)
(PART-4:WADR-3),
(PART-4:WADR-7),
(PART-4:ESSI-4),
(PART-6:INSTAL-19),
(PART-6:INSTAL-41),
(PART-6:INSTAL-42)
PROGRAMMABLE OFFSETS (PART-6:INSTAL-16),
(PART-6:INSTAL-29)
PROGRAMMING (PART-4:PROG-1),
(PART-4:WADR-1),
(PART-4:WADR-2),
(PART-4:WADR-3),
(PART-4:WADR-4),
(PART-4:WADR-7),
(PART-4:WADR--8),
(PART-4:WADR-9),
(PART-4:ESSI-1),
(PART-4:ESSI-2),
(PART-6:INSTAL-17),
(PART-6:INSTAL-18),
(PART-6:INSTAL-19),
(PART-6:INSTAL-29)
PROGRAMMING THE NC CONTROL
(PART-4:PROG-1)
RADERR (PART-6:INSTAL-35)
RADSCL (PART-6:INSTAL-35)
REF ADJUST (PART-6:INSTAL-40)
RS-422 (PART-5:SERIAL-3),
(PART-5:SERIAL-4),
(PART-5:SERIAL-6),
(PART-5:SERIAL-11)
RTS/CTS HARDWARE (PART-5:SERIAL-13),
(PART-5:SERIAL-14)
RUN SPD LIMIT (PART-6:INSTAL-10)
RUNNING A PROGRAM (PART-2:RUN-1)
AUTO CUT (PART-2:RUN-4)
CUTTING MODE (PART-2:RUN-3)
CYCLE START (PART-2:RUN-5)
DIAL-IN-KERF (PART-2:RUN-3)
HIGH PREHEAT (PART-2:RUN-4)
KNIFE COMPENSATION (PART-2:RUN-3)
MANUAL CUT (PART-2:RUN-3)
PART COUNT (PART-2:RUN-4)
PIERCE RAMP (PART-2:RUN-4)
PLATE ALIGNMENT (PART-2:RUN-5)
SINGLE STEP (PART-2:RUN-5)
TEST RUN (PART-2:RUN-4)
SCALING (PART-2:RUN-1), (PART-2:RUN-2)
SERIAL COMMUNICATIONS (PART-2:MENU-2),

(PART-3:FLOPPY-1),
(PART-5:SERIAL-1)
LOAD FROM RS232 (PART-5:SERIAL-15),
(PART-5:SERIAL-16)
CAD LINK (PART-5:SERIAL-17)
CHARACTER FORMATS (PART-5:SERIAL-13)
COMMUNICATION ENHANCEMENT
(PART-5:SERIAL-15)
CONNECTING TO RS-232C
(PART-5:SERIAL-5)
FILE DATA (PART-5:SERIAL-17)
FILE GET (PART-5:SERIAL-18)
FILE QUEUE (PART-5:SERIAL-19)
FILE QUIT (PART-5:SERIAL-20)
HANDSHAKING PROTOCOL
(PART-5:SERIAL-13)
HARDWARE HANDSHAKING
(PART-5:SERIAL-7)
PIN CONFIGURATION (PART-5:SERIAL-6)
RTS/CTS HARDWARE (PART-5:SERIAL-13)
SOFTWARE HANDSHAKING
(PART-5:SERIAL-9)
SPECIAL HANDSHAKING
(PART-5:SERIAL-15)
THREE DIGIT STATUS (PART-5:SERIAL-20)
XON/XOFF SOFTWARE (PART-5:SERIAL-14)
SERIAL DEFINITION (PART-3:FLOPPY-2),
(PART-3:FLOPPY-3),
(PART-6:INSTAL-17)
SERV05- SYS STATUS (PART-6:INSTAL-4)
SERVICE MODE (PART-6:INSTAL-1),
(PART-6:INSTAL-3),
(PART-6:INSTAL-31),
(PART-6:INSTAL-39)
SET HOME (PART-3:SPCFNC-1),
(PART-3:SPCFNC-5),
(PART-3:SPCFNC-7)
SETTING TABLE 1 HOME POSITION
(PART-3:SPCFNC-7)
SETUP EXAMPLE (PART-6:EXAMPLE-1)
EXAMPLE DESCRIPTION
(PART-6:EXAMPLE-1)
SHAPE SELECTION (PART-2:MENU-2),
(PART-2:SHAPES-1)
SHOW BYTE (PART-3:DSPY-1),
(PART-6:INSTAL-38)
SHOW CRUB (PART-3:DSPY-1),
(PART-6:INSTAL-39)
SHOW CRUW (PART-6:INSTAL-38)
SHOW DBLE (PART-6:INSTAL-38)
SHOW WORD (PART-6:INSTAL-37)
SINGLE BYE MEMORY DISPLAY
(PART-6:INSTAL-38)
SINGLE STEP (PART-2:RUN-5)
(PART-2:RUN-9)
SINGLE WORD MEMORY (PART-6:INSTAL-37)
SLOWDOWN DISTANCE (PART-6:INSTAL-9),
(PART-6:INSTAL-12),
(PART-6:INSTAL-31),
(PART-6:EXAMPLE-2)
SLOWDOWN RADIUS (PART-6:INSTAL-14)
(PART-6:INSTAL-31)
(PART-6:EXAMPLE-2)
SOFTWARE HANDSHAKING (PART-5:SERIAL-9)
SPD CAL (PART-6:INSTAL-39)
SPECIAL EOP (PART-6:INSTAL-22)
SPECIAL FUNCTIONS PART-3:SPCFNC-1)
CUTTING SELECTION (PART-3:SPCFNC-1)
GO HOME (PART-3:SPCFNC-5)
GO HOME MENU (PART-6:SPCFNC-5)
HEIGHT DISABLE (PART-6:SPCFNC-4)
HOME POSITION (PART-6:SPCFNC-7)
MANUAL CONTROL (PART-6:SPCFNC-1),
(PART-6:SPCFNC-3)
OXY ENABLE (PART-6:SPCFNC-2)
OXY PRHT/CUT (PART-6:SPCFNC-2)
OXY START (PART-6:SPCFNC-3)
PLASMA CUT (PART-6:SPCFNC-3)
PLASMA CUT/JOG (PART-6:SPCFNC-4)
PLASMA ENABLE (PART-6:SPCFNC-4)
PLASMA MANUAL CONTROL
(PART-6:SPCFNC-3)
PLASMA START (PART-6:SPCFNC-4)
PREHEAT (PART-6:SPCFNC-3)
SET HOME (PART-6:SPCFNC-7)
SPECIAL HANDSHAKING (PART-5:SERIAL-15)
SPEED CALIBRATION (PART-6:INSTAL-33)
(PART-6:INSTAL-39),
(PART-6:INSTAL-46),
(PART-6:EXAMPLE-1)
SPEED RANGE (PART-6:INSTAL-7),
(PART-6:INSTAL-8),
(PART-6:INSTAL-28),
(PART-6:EXAMPLE-1)
STANDARD SHAPES (PART-1:INTRO-1),
(PART-2:MENU-1),
(PART-2:MENU-2),
(PART-2:SHAPES-2),
(PART-6:INSTAL-14),
(PART-6:INSTAL-24)
DIMENSIONS COMMON (PART-2:SHAPES-2)
SHAPE SELECTION (PART-2:SHAPES-1)
START DELAY (PART-6:INSTAL-16)
SYS DATA (PART-3:DSPY-1), PART-6:INSTAL-4)
SYS RESET (PART-6:INSTAL-46)
SYSTEM CONFIGURATION (PART-6:INSTAL-25)
SYSTEM CONFIGURATION #2
(PART-6:INSTAL-25)
SYSTEM DATA (PART-6:INSTAL-4)
SYSTEM VARIABLE DISPLAY
(PART-6:INSTAL-33)
TABLE HOMES
FROM PART PROGRAMS (PART-3:SPCFNC-6)
TEST RUN (PART-2:RUN-3),
(PART-2:RUN-4),
(PART-2:RUN-6),
(PART-2:RUN-8)
THREE DIGIT STATUS (PART-5:SERIAL-20)
TRAVERSE SPEED LIMIT (PART-6:INSTAL-10)
V01-X DRIVE (PART-6:INSTAL-33)
VARIABLE STORE (PART-6:INSTAL-45)
WORD ADDRESS (PART-4:WADR-1)
AUXILIARY FUNCTIONS (PART-4:WADR-5)
CODE DESCRIPTIONS (PART-4:WADR-6)
DATA BLOCK (PART-4:WADR-1)
DWELL TIME (PART-4:WADR-6)
FEEDRATE (PART-4:WADR-6)
G PREPARATORY FUNCTIONS
(PART-4:WADR-4)
I DIMENSION (PART-4:WADR-2)
J DIMENSION (PART-4:WADR-3)
KEY CHARACTERS (PART-4:WADR-1)
LINE NUMBER (PART-4:WADR-1)
PROGRAM NUMBER (PART-4:WAD4-1)
PROGRAMMING (PART-4:WADR-1)
SAMPLE PROGRAM (PART-4:WADR-13)
X DIMENSION (PART-4:WADR-2)
Y DIMENSION (PART-4:WAD4-2)
X ABS (PART-6:INSTAL-34)
X DRIVE DIR (PART-6:INSTAL-13)
X ENC (PART-6:INSTAL-34)
X ENC DIST/REV (PART-6:INSTAL-13)

X ENCODER DIRECTION (PART-6:INSTAL-13)
X ERROR (PART-6:INSTAL-34)
X HOME (PART-6:INSTAL-34)
X MARKER OFFSET (PART-6:INSTAL-15)
X DIMENSION FOR LINES OR ARCS
(PART-4:WADR-2)
X/Y DISPLAY (PART-6:INSTAL-4)
XCNTR (PART-6:INSTAL-36)
XDAOUT (PART-6:INSTAL-33)
XERSCL (PART-6:INSTAL-34)
XON/XOFF SOFTWARE (PART-5:SERIAL-14)
Y ABS (PART-6:INSTAL-35)
Y DRIVE (PART-6:INSTAL-34)
Y DRIVE DIRECTION (PART-6:INSTAL-13)
Y ENC (PART-6:INSTAL-35)
Y ENC DIST/REV (PART-6:INSTAL-13)
Y ENCODER DIRECTION (PART-6:INSTAL-13)
Y ERROR (PART-6:INSTAL-35)
Y HOME (PART-6:INSTAL-35)
Y MARKER OFFSET (PART-6:INSTAL-16)
YCNTR (PART-6:INSTAL-36)
YDAOUT (PART-6:INSTAL-35)
YERSCL (PART-6:INSTAL-35)

DRAWINGS AND SCHEMATICS

Drawing List for the BURNY 1250 Operator Control System MYY-10770

DYY-23995	Schematic, **BURNY 1250** Operator Control System
DYY-21840	Schematic, **BURNY 1250** Operator Control System, with External E-Stop, Powered Marker & Lifter Solenoid Outputs
DYY-21880	Schematic, **BURNY 1250** Operator Control System, with External E-Stop
DYY-21910	Schematic, **BURNY 1250** Operator Control System, with 14 Pin CPC For External E-Stop, Limits, Homes, Warning Option, Optional Bus Powered Lifter Ouput
BO-11464	Assembly, Model M21 Encoder
BO-11465	Schematic, Male - Female Encoder Cable
BO-11263	Schematic, Armature and Tachometer Cable
BO-23996	Schematic, **BURNY 1250** Speed Adjust Card
BO-6847	Part Layout, 120 Watt PWM Drive Card
BO-9371	Modular Encoder Parameters
CO-11466	Assembly, M21 Encoder to MT2630 Motor
CO-21356	Schematic, **BURNY 1400** Front Panel Keypad
CO-27617	Schematic, 1000 Series RS-232 / 422 Adapter Card
D30-1083	Outline Drawing Inline and Folded MT2630 With Encoder
D30-60130	**BURNY 1250** Mounting Dimensions
DO-23982	Schematic, **BURNY 1250** Interface Card
DO-23983	Schematic, **BURNY 1250** Relay Card
DO-23988	Schematic, **BURNY 1400** 120Watt PWM Drive Card
DO-42292	External Connection Diagram **BURNY 1250**

Spare Parts List for the BURNY 1250 Operator Control System MYY-10770

MO-03067	Beeper Assembly
MO-07231	1200 Encoder Input Card
MO-07320	1000 Series RS232/422 Adapter
MO-08601	**NC2.5/2.8** Main Card with High Resolution
MO-10727	**BURNY 1250** Relay Card
MO-10773	**BURNY 1400** 120 Watt PWM Drive Card
MO-10796	**BURNY 1250** Interface Card, 5 V Encoders
MO-10863	**BURNY 1250** Speed Adjust Card
B14-28123	Transformer, 115/230V Primary, 44 VCT, 5 A Secondary
A16-21478	Lifter Switch Toggle, Mom-Off-Mom
A16-21480	Speed Range Switch Toggle, On-Off-On
X16-09149	Contact Block, 1nc 115 Vac 10 A
X16-16707	Emergency Stop Mushroom Pushlock Turn Reset
X18-10371	SPFW Bridge Rectifier 12 A, 600 V
X21-00185	Fuse, 2 A 250 V (Qty 1 used on MO-10796)
X21-03004	Fuse, 10 A 250 V (Qty 1 used on MO-10727)
X21-10957	Fuse, 3 AG 8 A 125 V (Qty 2 used on MO-10773)
X21-15588	Fuse, 3 A, PC Mount (Qty 1 used on MO-10773)

EXTERNAL SHIELD DOES NOT CONNECT TO ANYTHING ON EITHER END

INNER SHIELD TO BE PUT INTO X26-06922 HEAT SHRINK

△E X43-09107 (QTY 1)
X43-30386 (QTY 1)
△D X43-09105-2 (QTY 5)
X09-08344 0.75 FT

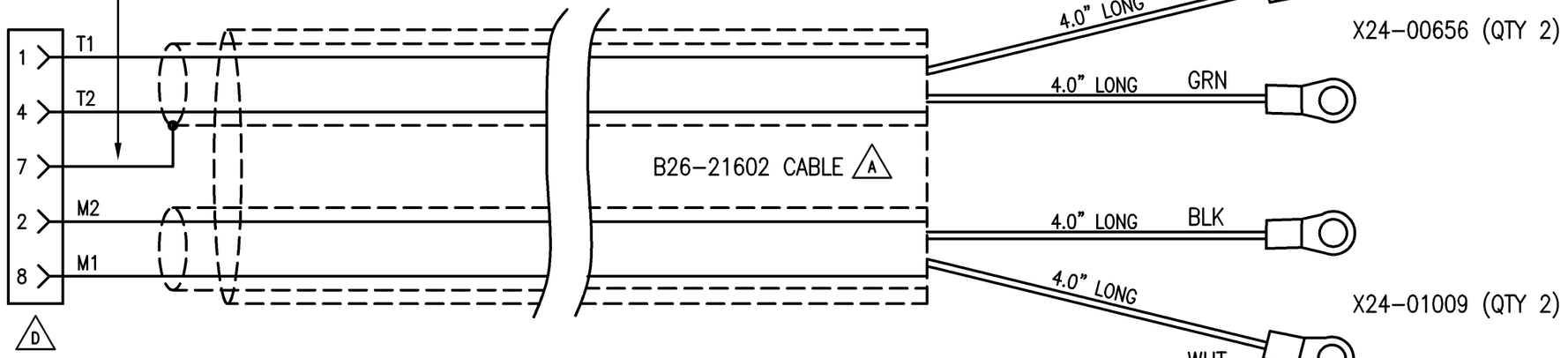

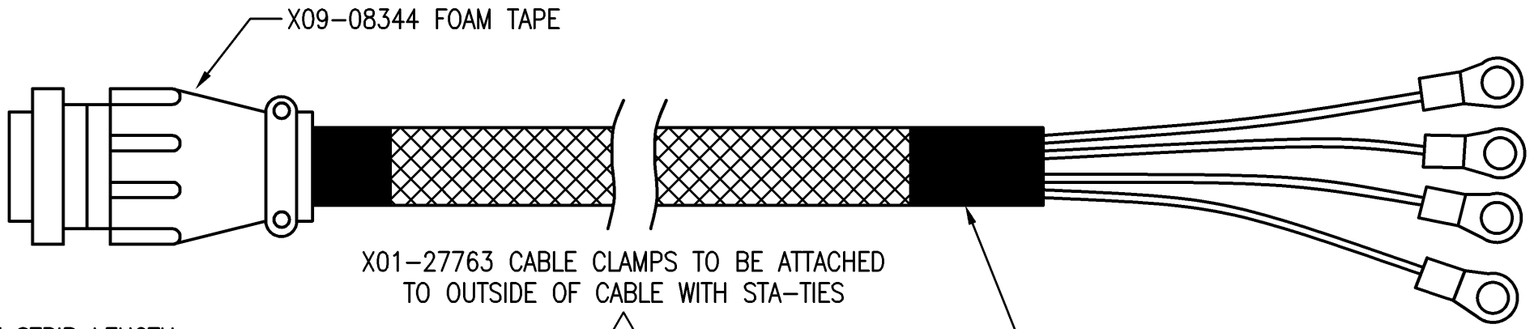

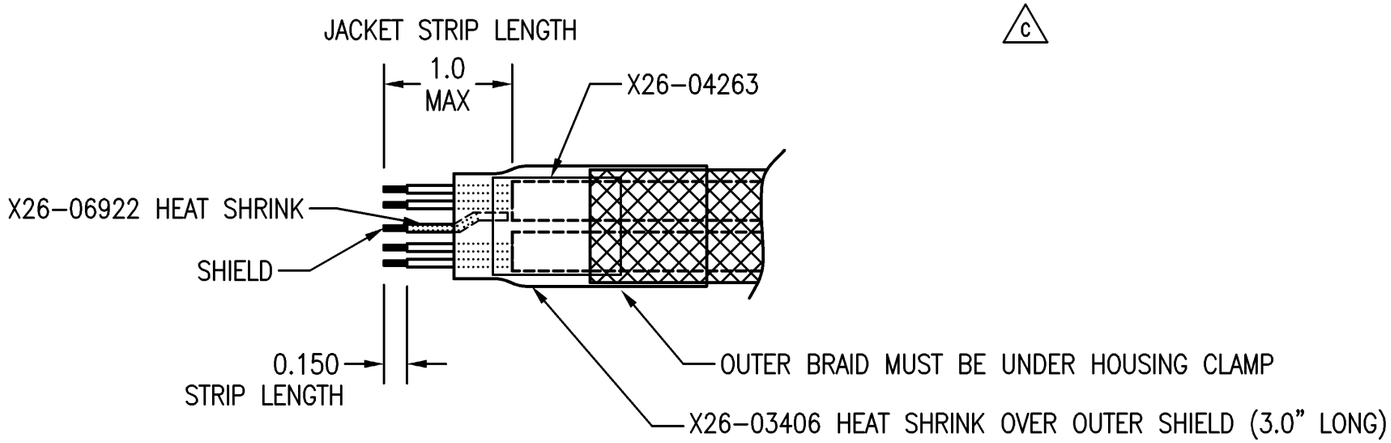

NOTE:
CABLE CLAMPS MUST BE TIGHTENED SECURELY ONTO THE THREADED CONNECTOR. USE MATING RECEPTACLE TO HOLD CONNECTOR WHEN TIGHTENING. USE CHANNEL – LOCK PLIERS (JAWS COVERED WITH TAPE TO PREVENT MARRING) TO TIGHTEN CABLE CLAMPS.

This print is the property of *Cleveland Motion Controls, Inc.* and is furnished as confidential information only. It must not be copied, traced or reproduced in any manner nor submitted to any outside parties for any purpose without our written permission. Any use of this print without written permission of *Cleveland Motion Controls, Inc.* is a violation of our exclusive rights.

SYM	REVISION	ECO	BY	DATE
F				
E	X43-30386 WAS X43-09108	12469	KAP	07/98
D	DELETE X43-10082	10649	KAP	03/95
C	X01-27763 WAS X01-11725	10189	KAP	10/94
B	ADD HEAT SHRINK TUBING	7429	KAP	02/91
A	CHG CABLE TO B26-21602	7437	JHG	01/91

TOLERANCES (EXCEPT AS NOTED)
DECIMAL
X.X ± .030
X.XX ± .015
X.XXX ± .005
ANGULAR
± 0.5°
DO NOT SCALE DRAWING

Cleveland Motion Controls
An IMC Company
7550 HUB PARKWAY CLEVELAND, OHIO

MATERIAL	FINISH	SCALE	REF
		NONE	MO-06926-XXX

ASSEMBLY & SCHEMATIC,
ARMATURE & TACH CABLE

CAD DWG NO. : B0-11263E.DWG

DRAWN BY	APPROVED BY	SIZE	DRAWING NUMBER	REV
JHG	KAK	B	B0-11263	E

DATE	DATE	
01 NOV 90	08 FEB 91	SHEET 1 OF 1

BLANK

HOUSING X43-09107
CONN CLAMP X43-09108
FEMALE PINS X43-26274-1 (QTY 9)
.38 SHRINK TUBING X26-04263 (3" LONG)
EXTERNAL BRAID X26-01762 (24" LONG)
FOAM TAPE X09-08344 (3" LONG)

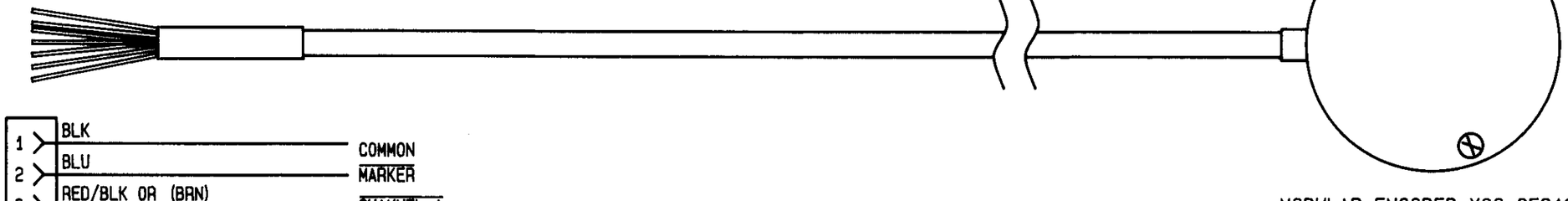

MODULAR ENCODER X28-25312

1	BLK	COMMON
2	BLU	MARKER
3	RED/BLK OR (BRN)	CHANNEL A
4	VIO	CHASSIS
5	WHT/BLK OR (YEL)	CHANNEL B
6	WHT	MARKER
7	RED	+5V
8	GRN	CHANNEL A
9	ORG	CHANNEL B

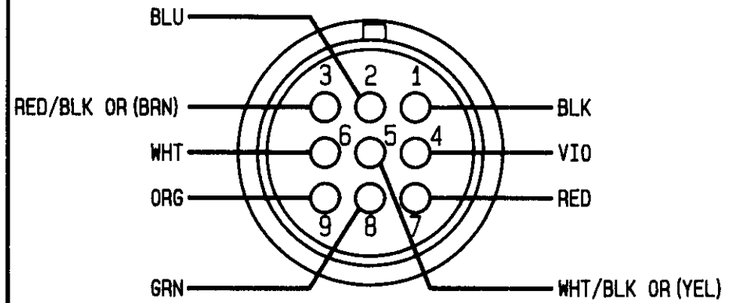

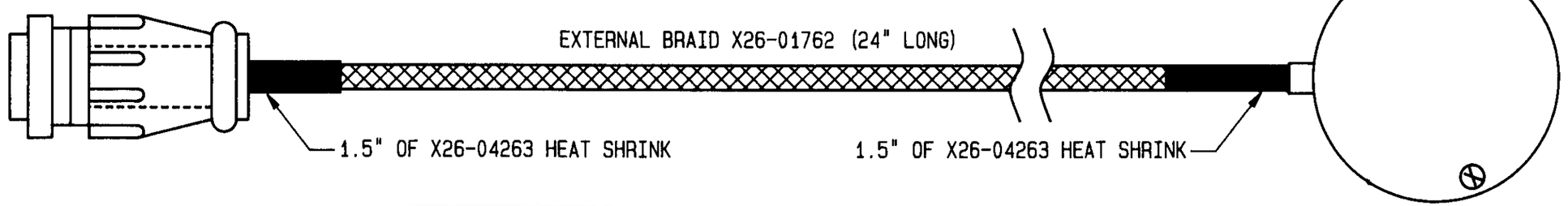

NOTE:
CONNECTOR CLAMP MUST BE TIGHTENED SECURELY ONTO THE THREADED CONNECTOR.

SYM	REVISION	ECO	BY	DATE
E				
D				
C				
B	ALTERNATE COLORS	11377	KAP	02/96
A	X43-09105 TO X43-26274	8778	JHG	03/93

TOLERANCES (EXCEPT AS NOTED)
DECIMAL
X.X ± .030
X.XX ± .015
X.XXX ± .005
ANGULAR ±0.5°
DO NOT SCALE DRAWING

CLEVELAND MACHINE CONTROLS

MATERIAL | FINISH | SCALE | REF

DRAWN BY: JHG — DATE: 10-19-92
APPROVED BY: KAK/SPK — DATE: 03-25-93

ASSEMBLY & SCHEMATIC, ENCODER & CABLE WIRING

DRAWING NUMBER: B0-11464
CHG: B

BLANK

EXTERNAL SHIELD DOES NOT CONNECT TO ANYTHING ON EITHER END.

HOUSING X43-18338
CLAMP X43-09108
PINS X43-05672-2
FOAM TAPE X09-08344
HEAT SHRINK X26-04263
22 AWG WIRE A26-22145-09
CONN SEAL X43-10790

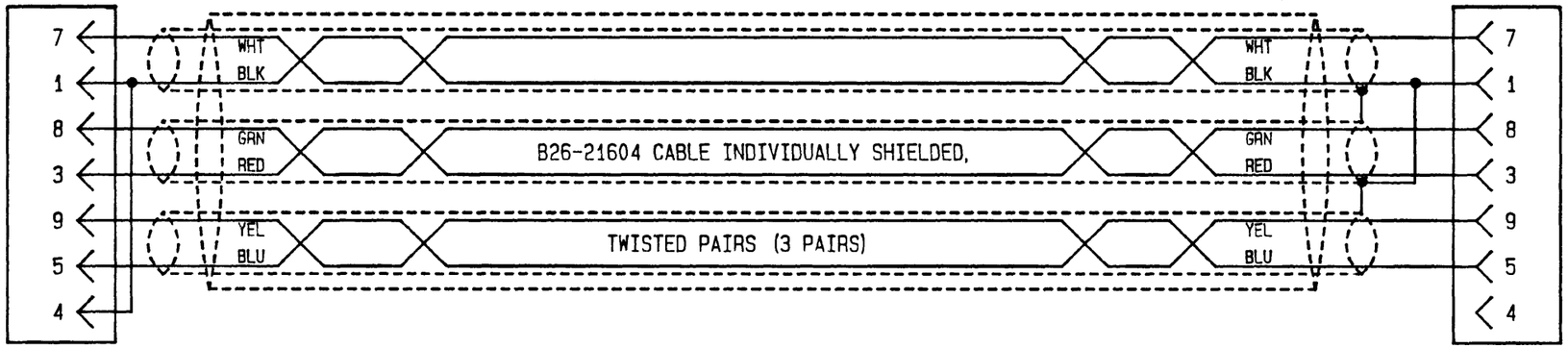

HOUSING X43-09107
CLAMP X43-09108
PINS X43-09105-2
FOAM TAPE X09-08344
HEAT SHRINK X26-04263
CONN SEAL X43-10790

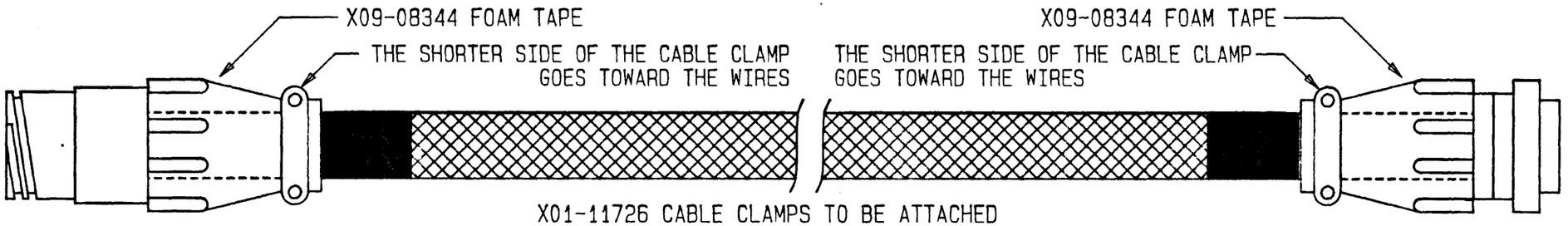

X01-11726 CABLE CLAMPS TO BE ATTACHED TO OUTSIDE OF CABLE WITH STA-TIES.

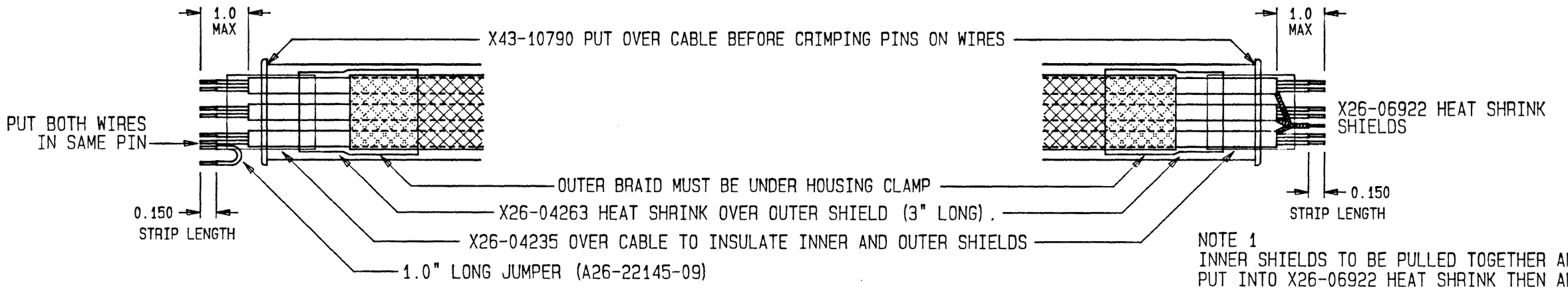

NOTE 1
INNER SHIELDS TO BE PULLED TOGETHER AND PUT INTO X26-06922 HEAT SHRINK THEN ALL GO INTO ONE TERMINAL IN PIN 1

NOTE 2
CABLE CLAMPS MUST BE TIGHTENED SECURELY ONTO THE THREADED CONNECTOR. USE MATING RECEPTACLE TO HOLD CONNECTOR WHEN TIGHTENING. USE CHANNEL-LOCK PLIERS (JAWS COVERED WITH TAPE TO PREVENT MARRING) TO TIGHTEN CABLE CLAMPS.

SYM	REVISION	ECO	BY	DATE
E				
D				
C				
B				
A	MOVE SLHD FROM 4 TO 1	9777	JHG	03/94

TOLERANCES (EXCEPT AS NOTED)
DECIMAL
X.X ± .030
X.XX ± .015
X.XXX ± .005
ANGULAR ±0.5°
DO NOT SCALE DRAWING

CMC CLEVELAND MACHINE CONTROLS

ASSEMBLY, M21 ENCODER CABLE

MATERIAL	FINISH	SCALE	DRAWN BY	APPROVED BY	DRAWING NUMBER	CHG
		REF M0-08798-XXX	JHG 10-21-92	kal 3-18-94	B0-11465	A

BLANK

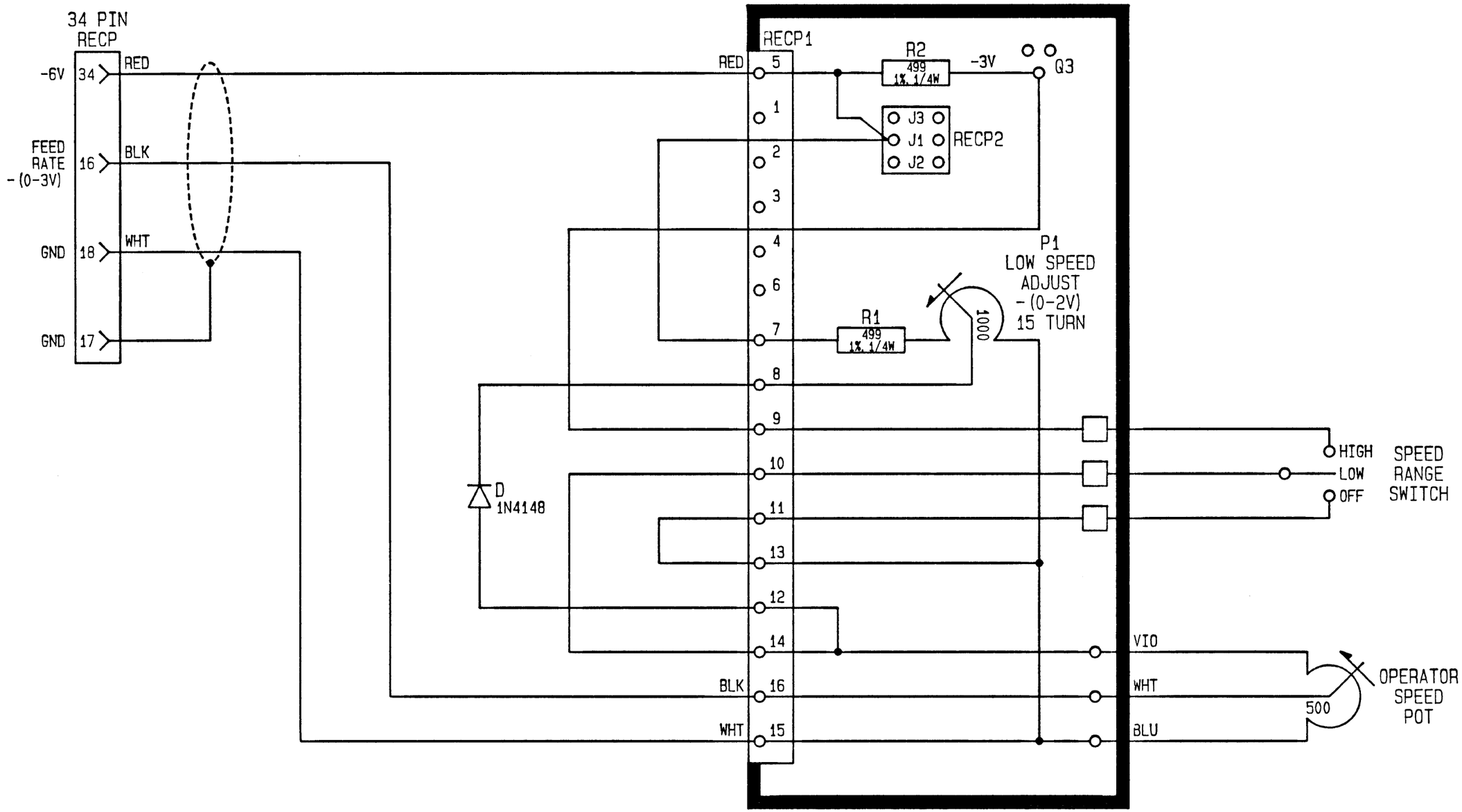

SYM	REVISION	ECO	BY	DATE
E				
D				
C				
B				
A				

TOLERANCES
(EXCEPT AS NOTED)
DECIMAL
X.X ± .030
X.XX ± .015
X.XXX ± .005
ANGULAR
±0.5°
DO NOT SCALE DRAWING

CMC CLEVELAND MACHINE CONTROLS

SCHEMATIC, REPLICATOR 1250
SPEED ADJUST CARD

MATERIAL	FINISH	SCALE	DRAWN BY	APPROVED BY	DRAWING NUMBER	CHG
		REF M0-10863	KAP		B0-23996	
			DATE 20 JULY 95	DATE 7-20-95		

BLANK

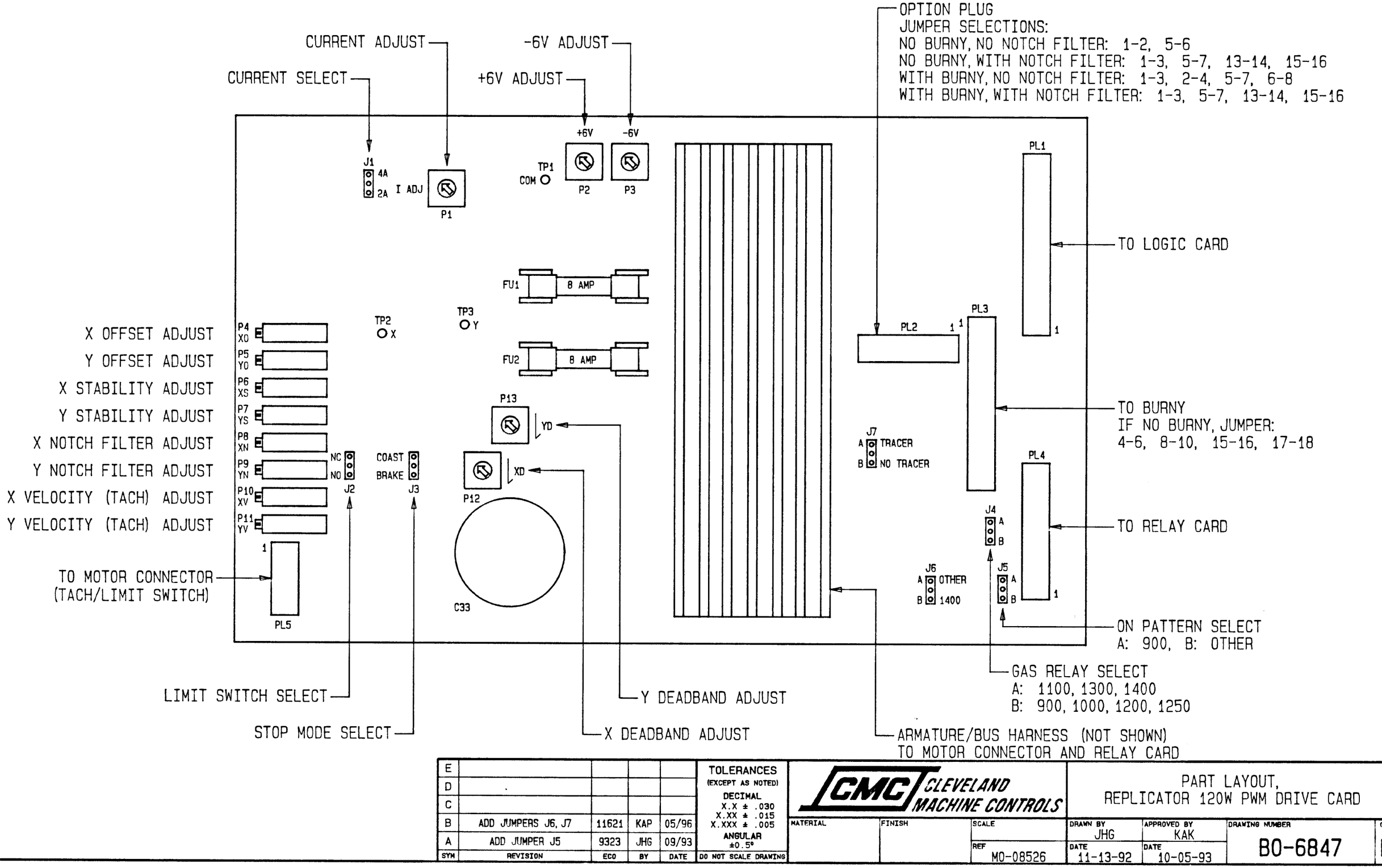

SYM	REVISION	ECO	BY	DATE
E				
D				
C				
B	ADD JUMPERS J6, J7	11621	KAP	05/96
A	ADD JUMPER J5	9323	JHG	09/93

TOLERANCES (EXCEPT AS NOTED)
DECIMAL
X.X ± .030
X.XX ± .015
X.XXX ± .005
ANGULAR
±0.5°
DO NOT SCALE DRAWING

CLEVELAND MACHINE CONTROLS

PART LAYOUT,
REPLICATOR 120W PWM DRIVE CARD

MATERIAL	FINISH	SCALE	DRAWN BY	APPROVED BY	DRAWING NUMBER	CHG
		REF MO-08526	JHG	KAK	B0-6847	B
			DATE 11-13-92	DATE 10-05-93		

BLANK

											1.5 P.D. PINION				SD20 AND SD21					
MODEL	DESCRIPTION	CURRENT CMC P/N	PREVIOUS CMC P/N	PREVIOUS CMC P/N	RATED DRIVE SPEED I.P.M.	RATED DRIVE SPEED M.P.M.	MOTOR MODEL	G.B. RATIO	MOTOR PULLEY	G.B. PULLEY	MOTOR SPEED	FINAL RATIO	INCHES PER ARM REV	mm PER ARM REV	1.25 P.D. PINION	1.5 P.D. PINION	1.625 P.D. PINION	1.6667 P.D. PINION	2.0 P.D. PINION	SD22 ENCODER LINES
SP-150	W/ENCODER, FOLDED	MO-11783-12F	MO-11344-12F	MO-08935-0	150	3.8	MT-2630-141AF	33.9	20	30	1619	50.85000	0.092672	2.354	3.0891	3.7069	4.0158	4.1189	- - -	8000
SP-150	W/ENCODER, FOLDED	MO-11783-22F	MO-11344-22F	MO-08795-0	250	6.4	MT-2630-141AF	33.9	24	28	2098	39.55000	0.119150	3.026	3.9717	4.7660	5.1632	5.2957	- - -	8000
SP-150	W/ENCODER, FOLDED	MO-11783-32F	MO-11344-32F	MO-08935-1	300	7.6	MT-2630-141AF	19.1	20	30	1824	28.65000	0.164481	4.178	4.1120	4.9344	5.3456	5.4828	- - -	6000
SP-150	W/ENCODER, FOLDED	MO-11783-42F	NONE	MO-09502-0	450	11.4	MT-2630-141AF	33.9	30	20	2158	22.6000	0.208513	5.296	4.1703	5.0043	5.4213	5.5605	- - -	4800
SP-150	W/ENCODER, FOLDED	MO-11783-52F	MO-11344-52F	MO-08795-1	500	12.7	MT-2630-141AF	19.1	24	28	2364	22.28333	0.211476	5.371	4.2295	5.0754	5.4984	5.6395	- - -	4800
SP-150	W/ENCODER, FOLDED	MO-11783-82F	MO-11344-82F	MO-10638	800	20.3	MT-2630-141AF	19.1	30	20	2162	12.73333	0.370083	9.400	4.6260	5.5512	6.0139	6.1682	- - -	3000
SP-150	W/ENCODER, INLINE	NONE	NONE	MO-10335	70	1.8	MT-2630-141AF	33.9	15	44	1477	99.44000	0.047389	1.204	3.9491	4.7389	5.1338	5.2655	- - -	20000
SP-150	W/ENCODER, INLINE	MO-11783-12I	MO-11344-12I	MO-08934-0	150	3.8	MT-2630-141AF	33.9	20	30	1619	50.85000	0.092672	2.354	3.0891	3.7069	4.0158	4.1189	- - -	8000
SP-150	W/ENCODER, INLINE	MO-11783-22I	MO-11344-22I	MO-08794-0	250	6.4	MT-2630-141AF	33.9	24	28	2098	39.55000	0.119150	3.026	3.9717	4.7660	5.1632	5.2957	- - -	8000
SP-150	W/ENCODER, INLINE	MO-11783-32I	MO-11344-32I	MO-08934-1	300	7.6	MT-2630-141AF	19.1	20	30	1824	28.65000	0.164481	4.178	4.1120	4.9344	5.3456	5.4828	- - -	6000
SP-150	W/ENCODER, INLINE	MO-11783-42I	NONE	MO-09501-0	450	11.4	MT-2630-141AF	33.9	30	20	2158	22.6000	0.208513	5.296	4.1703	5.0043	5.4213	5.5605	- - -	4800
SP-150	W/ENCODER, INLINE	MO-11783-52I	MO-11344-52I	MO-08794-1	500	12.7	MT-2630-141AF	19.1	24	28	2364	22.28333	0.211476	5.371	4.2295	5.0754	5.4984	5.6395	- - -	4800
SP-150	W/ENCODER, INLINE	MO-11783-82I	MO-11344-82I	MO-09267	800	20.3	MT-2630-141AF	19.1	30	20	2162	12.73333	0.370083	9.400	4.6260	5.5512	6.0139	6.1682	- - -	3000
SP-360	W/ENCODER, FOLDED	MO-11784-22F	MO-11343-22F	MO-09202	250	6.4	MT-3528-297CF	34.0	24	28	2104	39.66667	0.118800	3.018	3.9600	4.7520	5.1480	5.2801	- - -	8000
SP-360	W/ENCODER, FOLDED	MO-11784-32F	MO-11343-32F	MO-09200	350	8.9	MT-3528-297CF	34.0	28	24	2165	29.14286	0.1617	4.107	4.0425	4.8510	5.2552	5.3901	- - -	6000
SP-360	W/ENCODER, FOLDED	MO-11784-42F	MO-11343-42F	MO-09198	450	11.4	MT-3528-297CF	34.0	30	20	2165	22.66667	0.207900	5.281	4.1580	4.9896	5.4054	5.5441	- - -	4800
SP-360	W/ENCODER, FOLDED	MO-11784-52F	MO-11343-52F	MO-08956	500	12.7	MT-3528-297CF	34.0	30	18	2165	20.40000	0.230999	5.867	4.6200	5.5440	6.0060	6.1601	- - -	4800
SP-360	W/ENCODER, INLINE	MO-11784-22I	MO-11343-22I	MO-09203	250	6.4	MT-3528-297CF	34.0	24	28	2104	39.66667	0.118800	3.018	3.9600	4.7520	5.1480	5.2801	- - -	8000
SP-360	W/ENCODER, INLINE	MO-11784-32I	MO-11343-32I	MO-09201	350	8.9	MT-3528-297CF	34.0	28	24	2165	29.14286	0.1617	4.107	4.0425	4.8510	5.2552	5.3901	- - -	6000
SP-360	W/ENCODER, INLINE	MO-11784-42I	MO-11343-42I	MO-09199	450	11.4	MT-3528-297CF	34.0	30	20	2165	22.66667	0.207900	5.281	4.1580	4.9896	5.4054	5.5441	- - -	4800
SP-360	W/ENCODER, INLINE	MO-11784-52I	MO-11343-52I	MO-09175	500	12.7	MT-3528-297CF	34.0	30	18	2165	20.40000	0.230999	5.867	4.6200	5.5440	6.0060	6.1601	- - -	4800
SP-720	W/ENCODER, INLINE	MO-10070	NONE	NONE	250	6.4	MTE-4237-138BF	47.87	14	21	2857	71.80500	0.087503	2.223	- - -	- - -	- - -	- - -	5.2502	30000
SP-720	W/ENCODER, INLINE	MO-10071	NONE	NONE	250	6.4	MTE-4237-138BF	47.87	14	21	2857	71.80500	0.087503	2.223	- - -	- - -	- - -	- - -	5.2502	30000
SP-720	W/ENCODER, FOLDED	MO-10072	NONE	NONE	250	6.4	MTE-4237-138BF	47.87	14	21	2857	71.80500	0.087503	2.223	- - -	- - -	- - -	- - -	5.2502	30000
SP-720	W/ENCODER, FOLDED	MO-10073	NONE	NONE	250	6.4	MTE-4237-138BF	47.87	14	21	2857	71.80500	0.087503	2.223	- - -	- - -	- - -	- - -	5.2502	30000
SP-720	W/ENCODER, REV INLINE	MO-10070	NONE	NONE	250	6.4	MTE-4237-138BF	47.87	14	21	2857	71.80500	0.087503	2.223	- - -	- - -	- - -	- - -	5.2502	30000
SP-720	W/ENCODER, REV INLINE	MO-10071	NONE	NONE	250	6.4	MTE-4237-138BF	47.87	14	21	2857	71.80500	0.087503	2.223	- - -	- - -	- - -	- - -	5.2502	30000

This print is the property of *Cleveland Motion Controls, Inc.* and is furnished as confidential information only. It must not be copied, traced or reproduced in any manner nor submitted to any outside parties for any purpose without our written permission. Any use of this print without written permission of *Cleveland Motion Controls, Inc.* is a violation of our exclusive rights.

SYM	REVISION	ECO	BY	DATE
F				
E				
D				
C	ADD NEW CMC P/N	12590	KAP	07/98
B	ADD MO-10638/MO-10335	10727	KAP	03/95
A	GENERAL REVISION	10136	GMC	09/94

TOLERANCES (EXCEPT AS NOTED)
DECIMAL
X.X ± .030
X.XX ± .015
X.XXX ± .005
ANGULAR
± 0.5°
DO NOT SCALE DRAWING

Cleveland Motion Controls
An IMC Company
7550 HUB PARKWAY CLEVELAND, OHIO

MATERIAL	FINISH	SCALE	REF

PARAMETERS, 200 COUNT MODULAR ENCODER

CAD DWG NO. : BO-9371C01.DWG

DRAWN BY	APPROVED BY	SIZE	DRAWING NUMBER	REV
KAP	SPK	B	BO-9371	C
DATE 18 MAY 94	DATE 18 MAY 94	SHEET 1 OF 3		

BLANK

STEP 1:
CALCULATE NUMBER OF MOTOR REVOLUTIONS FOR SPECIFIED NUMBER OF ENCODER LINES SD22.

$$\frac{\text{SD22 – ENC LIN/REV}}{\text{ACTUAL ENCODER LINES/REV}} \times \frac{1}{4} = \left[\text{NUMBER OF MOTOR REVS}\right]$$

Multiply by 1/4 if jumpers on processor or I/O card are moved to the X1 position instead of the normal X4

NOTE:
THIS ONLY OCCURS ON THE OLD STYLE SYSTEMS.
NEW BURNY 2.5 & BURNY 3 DO NOT HAVE JUMPERS

STEP 2:
CALCULATE NUMBER OF OUTPUT SHAFT REVOLUTIONS BASED ON NUMBER OF MOTOR REVOLUTIONS.

$$\left[\begin{matrix}\text{NUMBER}\\ \text{OF}\\ \text{MOTOR REVS}\end{matrix}\right] \times \frac{\text{MOTOR PULLEY}}{\text{GEARBOX PULLEY}} \times \frac{1}{\text{GEARBOX RATIO}} = \left[\begin{matrix}\text{NUMBER OF}\\ \text{GEARBOX OUTPUT}\\ \text{REVOLUTIONS}\end{matrix}\right]$$

STEP 3:
CALCULATE HOW FAR THE MACHINE TRAVELS BASED ON THE NUMBER OF OUTPUT SHAFT REVOLUTIONS AND THE DIAMETER OF THE PINION GEAR.

$$\left[\begin{matrix}\text{NUMBER OF}\\ \text{GEARBOX OUTPUT}\\ \text{REVOLUTIONS}\end{matrix}\right] \times \left[\begin{matrix}\text{PINION GEAR}\\ \text{CIRCUMFERENCE}\end{matrix}\right] = \left[\text{SD20, SD21 – ENC DIST/REV}\right]$$

FOR DIAMETRAL PITCH GEARS

CIRCUMFERENCE = (P.D.) x 3.1415962

Pitch Diameter — Pi

FOR CIRCULAR PITCH GEARS

CIRCUMFERENCE = TOOTH SIZE x NUMBER OF TEETH ON PINION

For .25 circular pitch teeth are .2500" inches

EXAMPLE: A) MO–08935–0 (REFER TO TABLE FOR SPECIFICATIONS)
B) A08–16223 (BURNY STANDARD PINION)
16DP, 20 DEGREE PA, 1.5" PITCH DIA, 24 TEETH

STEP 1: $\frac{8000}{200} = 40$ [NUMBER OF MOTOR REVS]

STEP 2: $40\left(\frac{20}{30}\right)\left(\frac{1}{33.9}\right) = .786627$ [NUMBER OF GEARBOX OUTPUT REVOLUTIONS]

STEP 3: .786627 (1.5) (3.1415926) = 3.70689 [SD20, SD21 – ENC DIST/REV]

This print is the property of *Cleveland Motion Controls, Inc.* and is furnished as confidential information only. It must not be copied, traced or reproduced in any manner nor submitted to any outside parties for any purpose without our written permission. Any use of this print without written permission of *Cleveland Motion Controls, Inc.* is a violation of our exclusive rights.

SYM	REVISION	ECO	BY	DATE
F				
E				
D				
C				
B				
A				

TOLERANCES (EXCEPT AS NOTED)
DECIMAL
X.X ± .030
X.XX ± .015
X.XXX ± .005
ANGULAR
± 0.5°
DO NOT SCALE DRAWING

Cleveland Motion Controls
An IMC Company
7550 HUB PARKWAY CLEVELAND, OHIO

MATERIAL	FINISH	SCALE	REF

PARAMETERS,
200 COUNT MODULAR ENCODER

CAD DWG NO. : BO–9371C02.DWG

DRAWN BY	APPROVED BY	SIZE	DRAWING NUMBER	REV
KAP	SPK	B	BO–9371	C
DATE 18 MAY 94	DATE 18 MAY 94		SHEET 2 OF 3	

BLANK

	PART_NO.	PITCH	P_ANG	PITCH_DIA	BORE	FACE	NO._TEETH	HUB_DIA	HUB_PROJ	SET_SCRW
1	A01-13087	24DP	14.5	1.625"	0.375"	0.375	39	0.75	0.375	8-32
2	A01-13088	24DP	20	1.6667"	0.375"	0.375	40	0.75	0.375	10-32
3	A01-15074	24DP	14.5	1.625"	0.625"	0.75	39	1.187	0.5	(2) 5/16-18
4	A01-15160	16DP	20	2.0"	1.0"	0.75	32	1.812	0.5	(2) 1/4-20
5	A01-15673	16DP	20	2.5"	0.625"	0.75	40	2.187	0.625	(2) 10-32
6	A01-16456	24DP	14.5	1.5"	0.625"	0.75	36	1.125	0.625	(2) 8-32
7	A01-16457	24DP	14.5	1.5"	0.625"	0.75	36	1.125	2.25	(2) 8-32
8	A01-18599	20DP	20	1.5"	0.625"	0.5	30	1.4375	0.4375	(2) 5/16-18
9	A01-26149	.25 CIR	20	1.5119"	0.625"	1.0"	19	1.1875	1.0"	(2) 5/16-18
10	A08-15894	16DP	20	2.5"	0.625"	0.75	40	2.187	0.625	(2) 10-32
11	A08-16195	16DP	20	1.5"	0.625"	0.75	24	1.187	0.5	(2) 5/16-18
12	A08-16223	16DP	20	1.5"	0.625"	0.75	24	1.187	0.5	(2) 5/16-18
13	B01-18856	.25 CIR	20	2.0"	1.0"	0.75	25	1.641	0.625	(2) 3/8-16
14	B01-18864	.25 CIR	14.5	2.0"	1.0"	0.75	25	1.641	0.625	(2) 3/8-16
15	B01-19539	12DP	20	1.5"	0.625"	1.0"	18	1.234	0.625	(2) 5/16-18
16	B01-19876	2.0 MOD	20	2.125"	1.0"	1.0"	27	1.688	1.75	(2) 3/8-16
17	B01-20066	.25 CIR	20	1.5"	0.375"	0.75	18	1.25	0.25	8-32
18	B01-21093	16DP	20	1.0"	12mm	0.75	16	0.812	0.5	(2) 1/4-20
19	B01-21902	16	20	2.0"	1.0"	0.75	32	1.688	1.125	(2) 5/16-18
20	B01-21960	.25 CIR	14.5	2.0"	1.0"	0.75	25	1.688	1.125	(2) 5/16-18
21	B01-22125	1/5 CIR	20	2.0"	1.0"	0.75	31	1.688	1.125	(2) 5/16-18
22	B01-22215	.25 CIR	20	2.0"	1.0"	0.75	25	1.688	1.125	(2) 5/16-18
23	B01-22299	12DP	20	2.0"	1.0"	0.75	24	1.688	1.125	(2) 5/16-18
24	B01-22319	24 DP	14.5	1.0"	0.475	0.75	24	0.812	0.5	10-32
25	B01-22362	.25 CIR	14.5	2.546"	1.0"	1.0"	32	2.125	1.125	(2) 5/16-18
26	B01-22826	----	20	----	----	----	30	----	----	----
27	B01-22827	----	20	----	----	----	18	----	----	----
28	B01-23406	1/5 CIR	20	1.528"	0.375"	0.375	24	0.75	0.5	10-32
29	B01-24566	1/5 CIR	20	1.5915"	0.375"	0.375	25	0.75	0.375	(2) 10-32
30	B01-25200	1.0 MOD	20	16mm	8mm	10mm	16	14mm	7mm	(2) M4
31	B08-24476	20DP	14.5	1.5"	0.625"	0.75	30	1.1875	0.5	(2) 5/16-18
32	C01-24535	16DP	20	2.0"	1.0"	0.75	32	1.688	1.125	(2) 5/16-18
33	X01-10255	1/10 CIR	20	1.5915"	0.375"	0.1875	50	0.5	0.25	6-32
34	X01-11177	24DP	20	1.6667"	0.375"	0.375	40	0.75	0.375	NONE
35	X01-13103	24DP	20	1.6667"	0.375"	0.375	40	0.75	0.375	10-32
36	X01-15343	16DP	20	1.5"	0.375"	0.5	24	0.75	0.5	10-32
37	X01-16137	20DP	20	1.5"	0.375"	0.375	30	0.75	0.375	10-32
38	X08-16217	16DP	20	1.5"	0.625"	0.75	24	1.1875	0.5	(2) 5/16-18
39	B01-27071	12DP	14.5	1.5"	0.625"	0.75	18	1.25	0.5	(2) 5/16-18
40	B01-27072	12DP	14.5	1.5"	0.375"	0.75	18	1.25	0.5	(2) 10-32

This print is the property of *Cleveland Motion Controls, Inc.* and is furnished as confidential information only. It must not be copied, traced or reproduced in any manner nor submitted to any outside parties for any purpose without our written permission. Any use of this print without written permission of *Cleveland Motion Controls, Inc.* is a violation of our exclusive rights.

SYM	REVISION	ECO	BY	DATE
F				
E				
D				
C				
B				
A				

TOLERANCES (EXCEPT AS NOTED)
DECIMAL
X.X ± .030
X.XX ± .015
X.XXX ± .005
ANGULAR
± 0.5°
DO NOT SCALE DRAWING

Cleveland Motion Controls
An IMC Company
7550 HUB PARKWAY CLEVELAND, OHIO

MATERIAL | FINISH | SCALE | REF

PARAMETERS, 200 COUNT MODULAR ENCODER

CAD DWG NO. : B0-9371C03.DWG
DRAWN BY: KAP
APPROVED BY: SPK
DATE: 18 MAY 94
DATE: 18 MAY 94
SIZE: B
DRAWING NUMBER: B0-9371
REV: C
SHEET 3 OF 3

BLANK

MODULAR ENCODER INSTALLATION TO SERVOMOTOR

MOUNTING CONFIGURATION

PLEASE REFER TO FIGURE 1 FOR PROPER MOUNTING SURFACE CONFIGURATION. YOU WILL NOTE THAT TWO 4-40 X .18 DEEP TAPPED HOLES ARE REQUIRED. THE TWO TAPPED HOLES ARE USED TO MOUNT THE MODULAR ENCODER TO THE MOTOR SURFACE WITH THE 4-40 X .38 SOCKET HEAD SCREWS PROVIDED.

THE ENCODER COVER IS HELD IN PLACE USING TWO 2 X 3/8 P.H. SELF-TAPPING SCREWS. THESE SCREWS THREAD INTO THE MAIN ASSEMBLY AS SHOWN IN FIGURE 1.

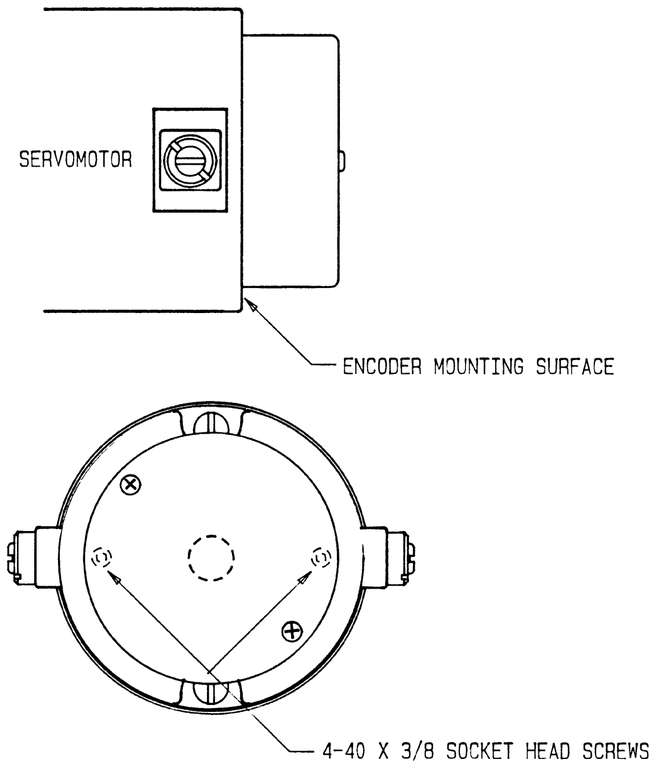

FIGURE 1

INSTALLATION PROCEDURE

STEP 1 - REMOVE COVER

BACK OUT THE TWO NO. 2 P.H. ENCODER COVER SCREWS WHICH SECURE THE COVER TO THE MAIN ASSEMBLY. REMOVE THE COVER BEING CAREFUL NOT TO DISLODGE THE GAP GAUGE (MYLAR SHIM) FROM THE ASSEMBLY.

STEP 2 - MOUNT MAIN ASSEMBLY

SLIDE THE MAIN ASSEMBLY ONTO THE MOTOR SHAFT, CARE SHOULD BE TAKEN TO AVOID ANY EXCESSIVE FORCE IN MOUNTING AS THE CAPTURED ENCODER DISK COULD BE DAMAGED. IF THE ASSEMBLY DOES NOT SLIDE ON FREELY, DO NOT PROCEED UNTIL THE CAUSE OF THE INTERFERENCE HAS BEEN DETERMINED. A SLIP FIT IS DESIRED, A DISK/HUB ASSEMBLY WHICH IS EXCESSIVELY LOOSE WILL RESULT IN UNACCEPTABLE SIGNAL ERROR CAUSED BY GAP VARIATION.

LOCATE AND ALIGN THE MOUNTING HOLE LOCATIONS OF THE ENCODER WITH THOSE OF THE MOTOR MOUNTING SURFACE. SECURE THE MAIN ASSEMBLY TO THE MOUNTING SURFACE USING THE MOUNTING HARDWARE PROVIDED. AFTER SECURING ENCODER TO MOTOR, LIFT THE DISK/HUB ASSEMBLY TO INSURE THAT IT MOVES FREELY UP AND DOWN THE MOTOR SHAFT WITHIN THE CONSTRAINT OF THE MAIN ASSEMBLY. IF THE DISK/HUB ASSEMBLY DOES NOT MOVE FREELY, DO NOT PROCEED AS DAMAGE COULD RESULT.

STEP 3 - GAPPING

LIFT AND ROTATE THE DISK/HUB ASSEMBLY, ALIGNING ONE OF THE TWO HUB SET SCREWS WITH THE ACCESS CHANNEL (SEE FIGURE 2), WHICH IS LOCATED RIGHT NEXT TO THE L.E.D. MOUNTING LOCATION. THE ACCESS CHANNEL PROVIDES A MEANS OF ACCESS TO THE HUB SET SCREWS USING THE 4-48 HEX WRENCH PROVIDED.

APPLY A VERY LIGHT PRESSURE TO THE TOP OF THE HUB WHICH WILL ENGAGE THE DISK WITH THE GAP GAUGE (MYLAR SHIM). USING THE HEX WRENCH, LIGHTLY TIGHTEN ONE OF THE TWO SET SCREWS, ROTATE THE MOTOR SHAFT BY HAND TO EXPOSE THE SECOND HUB SET SCREW WHICH IS 90 DEGREES FROM THE FIRST SET SCREW.

AFTER YOU HAVE TIGHTENED BOTH HUB SET SCREWS, ROTATE THE MOTOR SHAFT BY HAND, USE THE GAP GAUGE (MYLAR SHIM) TO INSURE THAT THERE IS CONSISTENT SPACING THROUGHOUT THE ENTIRE ROTATION OF THE MOTOR SHAFT. SHOULD THERE BE ANY BINDING, LOOSEN THE HUB SET SCREWS AND REPEAT THE PROCEDURE. DO NOT REMOVE THE GAP GAUGE (MYLAR SHIM) UNTIL SATISFIED THAT A CONSISTENT AIR GAP EXISTS. REMOVE GAUGE, DO NOT DISCARD AS GAUGE MUST BE USED IF UNIT IS TO BE REMOVED.

AFTER REMOVING GAP GAUGE (MYLAR SHIM), FURTHER TIGHTEN THE HUB SET SCREWS TO INSURE THAT THEY REMAIN SECURE. REPLACE COVER REMOVED IN STEP 1 BY REVERSING PROCEDURE.

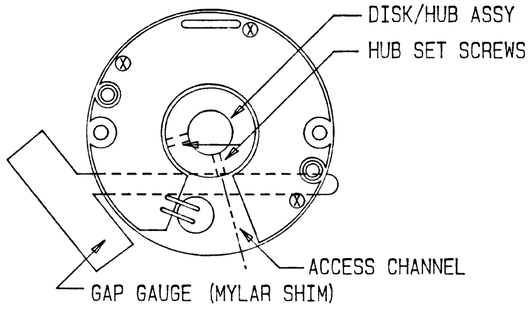

FIGURE 2

STEP 4 - ELECTRICAL CONNECTIONS

WIRE COLOR	OUTPUT FUNCTION
GREEN	A OUTPUT
RED/BLK	A COMP
BLUE	M COMP
BLACK	COMMON
RED	+VS
ORANGE	B OUTPUT
WHITE/BLK	B COMP
WHITE	M OUTPUT
VIOLET	SHIELD

NOTES:

1.) SHOULD IT BE NECESSARY TO REMOVE AN ENCODER FOR ANY REASON, IT CAN BE ACCOMPLISHED QUITE SIMPLY, WITHOUT CAUSING DAMAGE, BY REVERSING THE INSTALLATION PROCEDURE. BE SURE TO RE-INSERT THE GAP GAUGE (MYLAR SHIM) TO PREVENT DAMAGE TO THE ENCODER DISK.

2.) THE OUTPUT SIGNALS, PHASE RELATIONSHIP AND DUTY SIGNAL ARE FACTORY PREALIGNED AND SHOULD NOT REQUIRE ANY ADJUSTMENT. SEE FIGURE 3. IF THE OUTPUT SIGNALS DO NOT MEET PUBLISHED FACTORY SPECIFICATIONS, IT COULD BE DUE TO AN IMPROPERLY SET AIR GAP. IF THE UNIT IS FOUND TO BE OUT OF PUBLISHED SPECIFICATIONS, THE AIR GAP SHOULD BE CHECKED TO INSURE THAT IT WAS SET PROPERLY DURING THE INSTALLATION PROCEDURE.

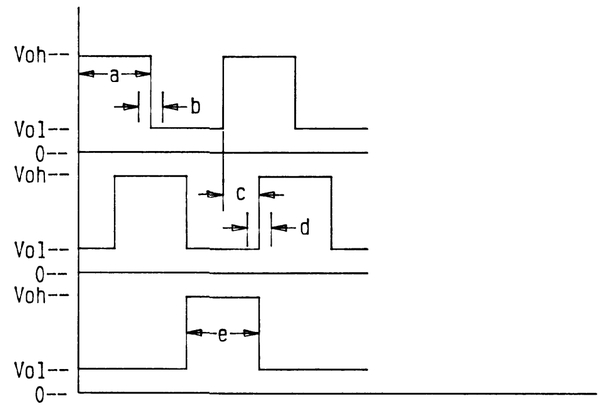

FIGURE 3

SYM	REVISION	ECO	BY	DATE
E				
D				
C				
B				
A				

TOLERANCES (EXCEPT AS NOTED)
DECIMAL
X.X ± .030
X.XX ± .015
X.XXX ± .005
ANGULAR ±0.5°
DO NOT SCALE DRAWING

CLEVELAND MACHINE CONTROLS

ASSY, M21 ENCODER TO MT2630 SERVOMOTOR

MATERIAL	FINISH	SCALE	DRAWN BY	APPROVED BY	DRAWING NUMBER	CHG
		REF	JHG	SPK	CO-11466	
			DATE 10-20-92	DATE 10-22-92		

BLANK

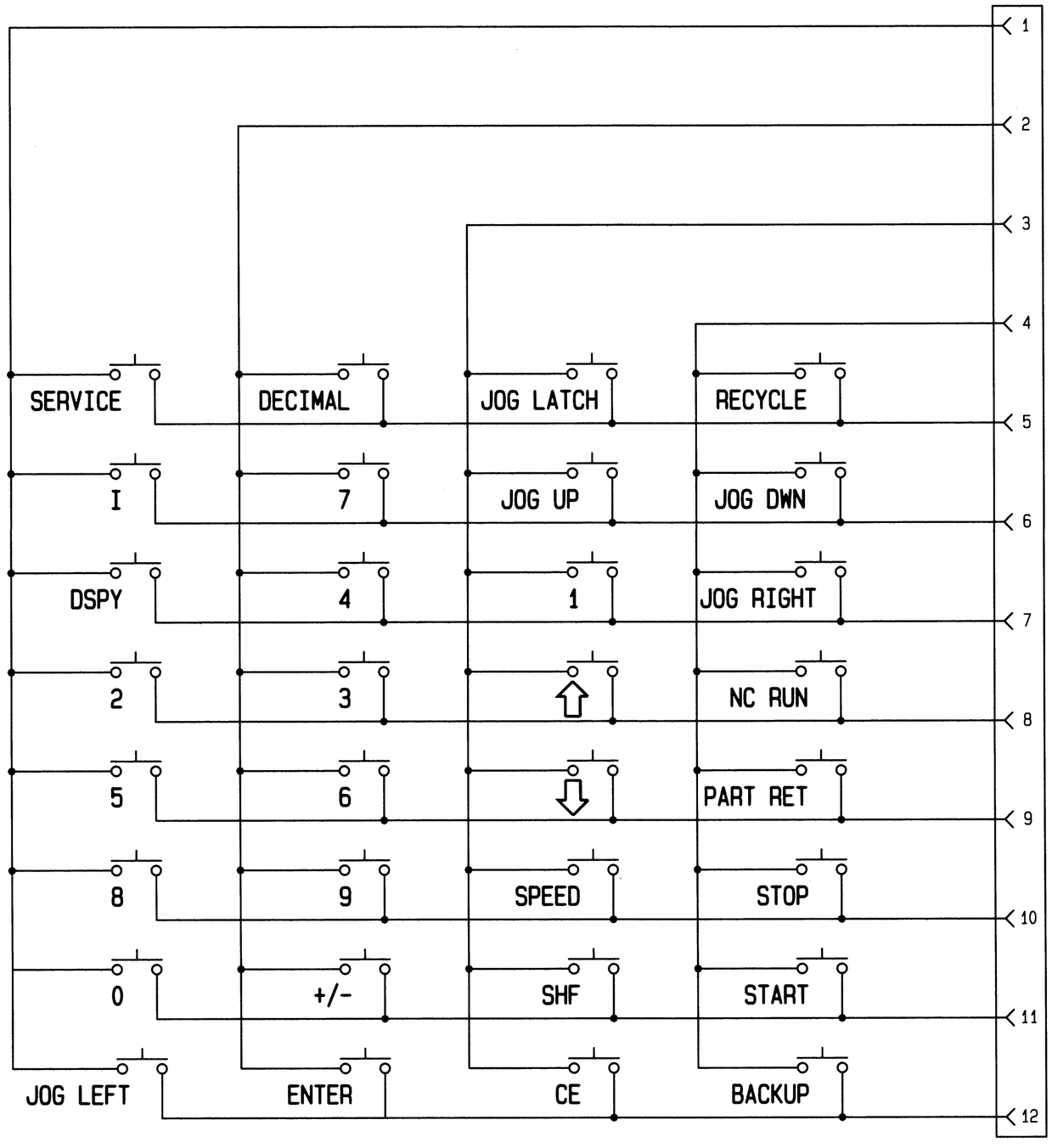

SYM	REVISION	ECO	BY	DATE
E				
D				
C				
B				
A				

TOLERANCES (EXCEPT AS NOTED)
DECIMAL
X.X ± .030
X.XX ± .015
X.XXX ± .005
ANGULAR ±0.5°
DO NOT SCALE DRAWING

CLEVELAND MACHINE CONTROLS

REPLICATOR 1400
FRONT PANEL KEYPAD SCHEMATIC

MATERIAL	FINISH	SCALE	DRAWN BY	APPROVED BY	DRAWING NUMBER	CHG
		REF	JHG	SPK	CO-21356	
			DATE 02/21/95	DATE 2-24-95		

BLANK

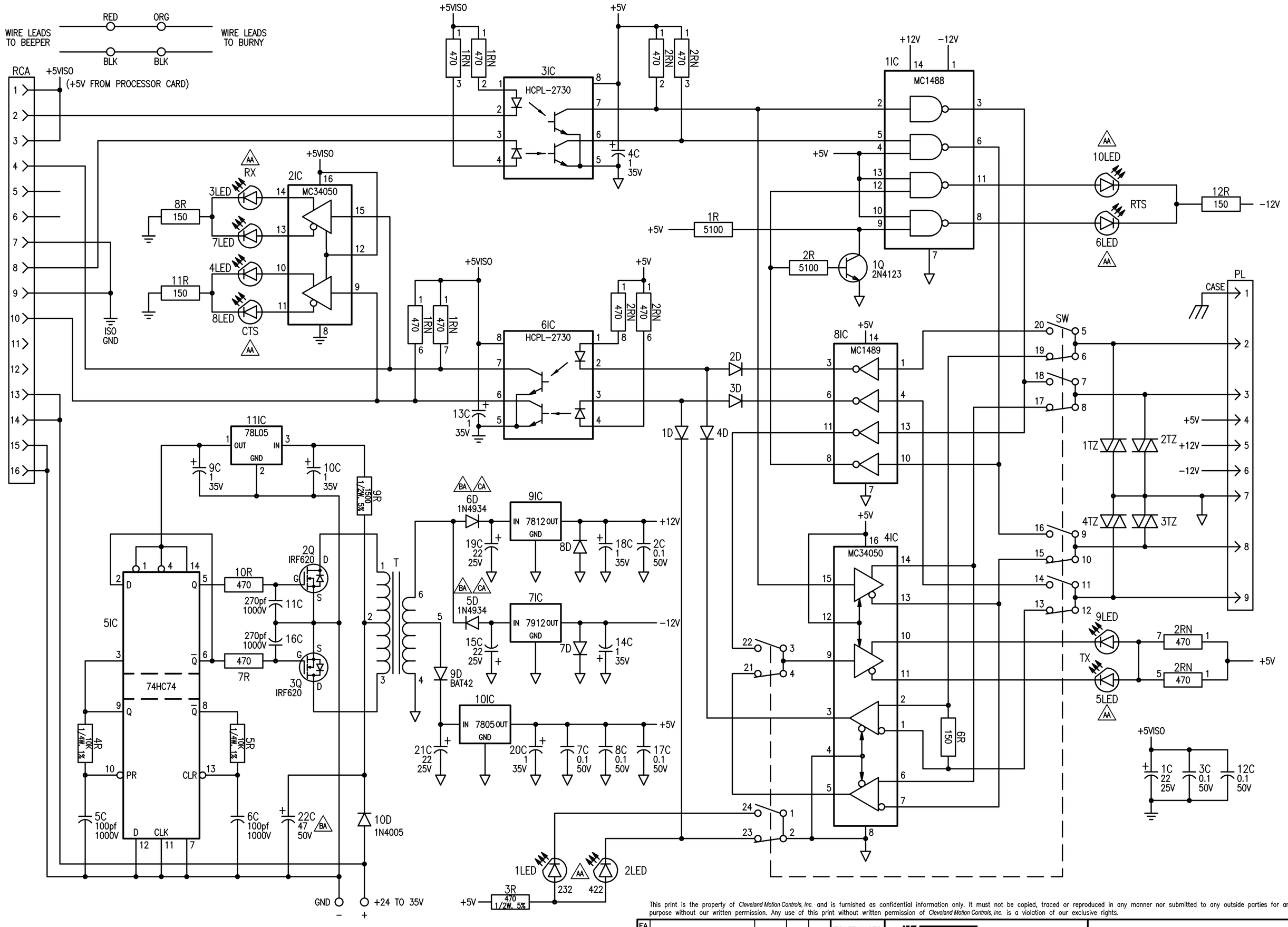

2.) ALL RESISTORS ARE 1/4W, 5%.

1.) ALL DIODES ARE 1N4148.

NOTE: UNLESS OTHERWISE SPECIFIED.

This print is the property of *Cleveland Motion Controls, Inc.* and is furnished as confidential information only. It must not be copied, traced or reproduced in any manner nor submitted to any outside parties for any purpose without our written permission. Any use of this print without written permission of *Cleveland Motion Controls, Inc.* is a violation of our exclusive rights.

SYM	REVISION	ECO	BY	DATE
FA				
EA				
DA				
CA	5D, 6D WERE 1N4005	CLE1184	KAP	08/99
BA	ADD 22C-5D,6D WERE 1N4148	12585	GMC	02/98
AA	REMOVE LED COLOR FROM SCHEM	12183	KAP	05/97

TOLERANCES (EXCEPT AS NOTED)
DECIMAL
X.X ± .030
X.XX ± .015
X.XXX ± .005
ANGULAR
± 0.5°
DO NOT SCALE DRAWING

Cleveland Motion Controls
An IMC Company
7550 HUB PARKWAY CLEVELAND, OHIO

MATERIAL | FINISH | SCALE | REF MO-07259

SCHEMATIC, BURNY 2.5
RS232/422 ADAPTOR WITH 24V ON RCA

CAD DWG NO. : CO-27617CA.DWG
DRAWN BY GMC | APPROVED BY RDM
DATE 01-30-91 | DATE 22 MAR 91
SIZE C | DRAWING NUMBER CO-27617 | REV CA
SHEET 1 OF 1

BLANK

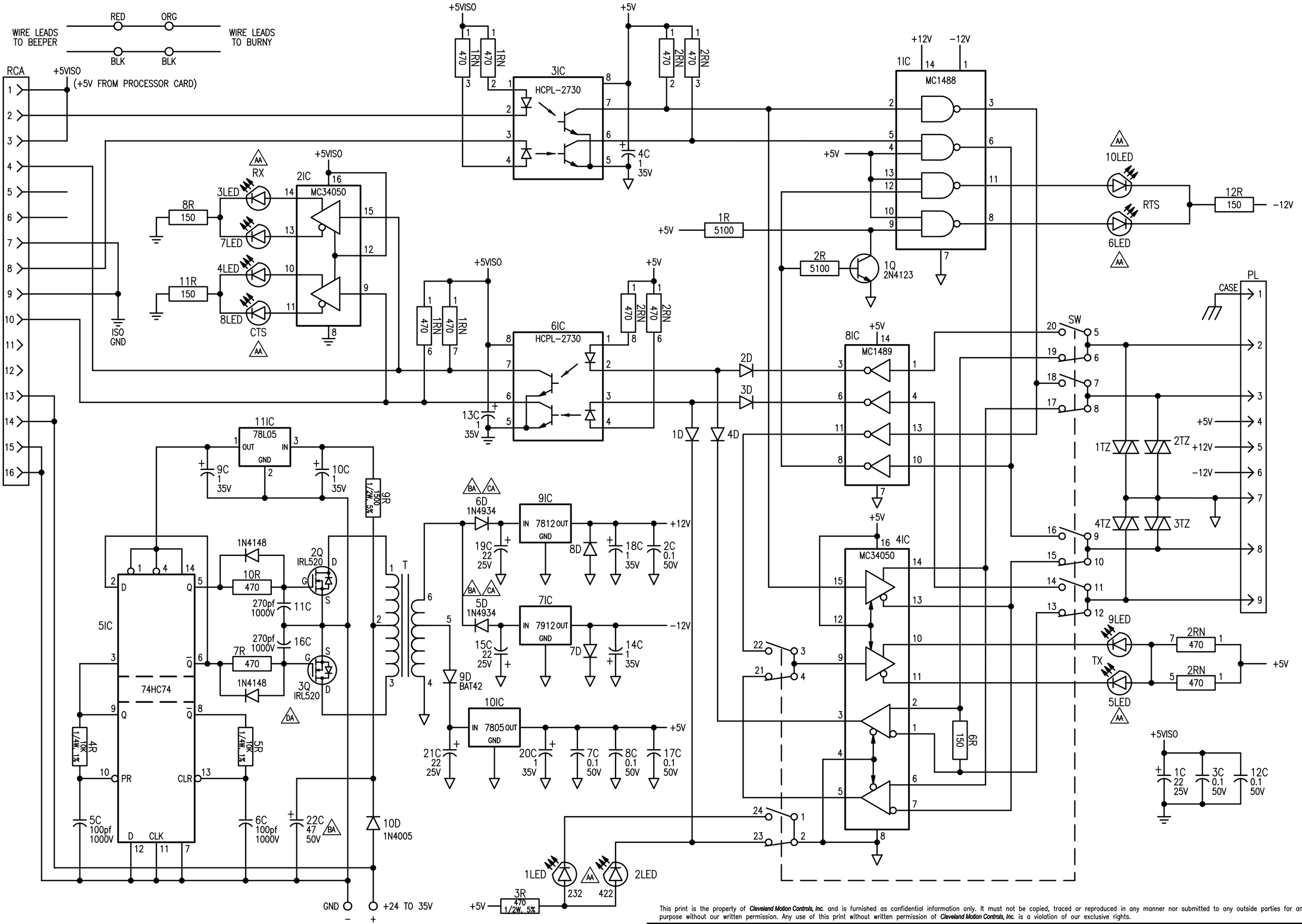

2.) ALL RESISTORS ARE 1/4W, 5%.

1.) ALL DIODES ARE 1N4148.

NOTE: UNLESS OTHERWISE SPECIFIED.

This print is the property of *Cleveland Motion Controls, Inc.* and is furnished as confidential information only. It must not be copied, traced or reproduced in any manner nor submitted to any outside parties for any purpose without our written permission. Any use of this print without written permission of *Cleveland Motion Controls, Inc.* is a violation of our exclusive rights.

SYM	REVISION	ECO	BY	DATE
FA				
EA				
DA	IRL520 WAS IRF620 (2Q & 3Q)	CLE2772	KAP	03/04
CA	5D, 6D WERE 1N4005	CLE1184	KAP	08/99
BA	ADD 22C-5D,6D WERE 1N4148	12585	GMC	02/98
AA	REMOVE LED COLOR FROM SCHEM	12183	KAP	05/97

TOLERANCES (EXCEPT AS NOTED)
DECIMAL
X.X ± .030
X.XX ± .015
X.XXX ± .005
ANGULAR
± 0.5°
DO NOT SCALE DRAWING

Cleveland Motion Controls
An IMC Company
7550 HUB PARKWAY CLEVELAND, OHIO

MATERIAL | FINISH | SCALE | REF MO-07259

SCHEMATIC, BURNY 2.5 RS232/422 ADAPTOR WITH 24V ON RCA

CAD DWG NO. : CO-27617DA.DWG
DRAWN BY GMC
APPROVED BY RDM
DATE 01-30-91
DATE 22 MAR 91

SIZE C | DRAWING NUMBER CO-27617 | REV DA

SHEET 1 OF 1

BLANK

NOTE:
1.) ALL DIMENSIONS ARE IN MILLIMETERS / INCHES .

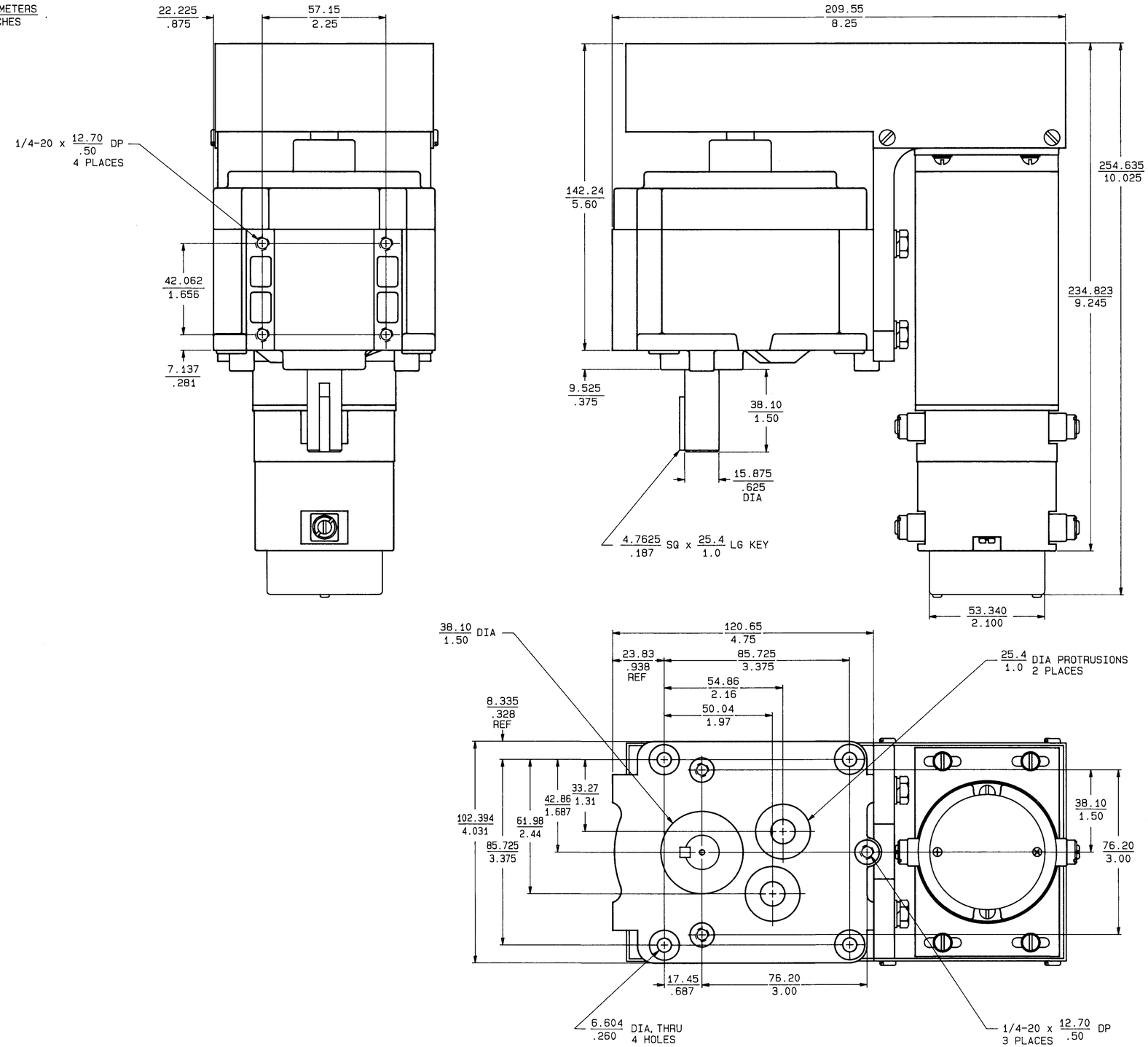

SHEET 1 OF 2

E					TOLERANCES EXCEPT AS NOTED: DECIMAL X.X ± .030, X.XX ± .015, X.XXX ± .005; ANGULAR ±0.5°
D					
C					
B					
A					
SYM	REVISION	ECO	BY	DATE	DO NOT SCALE DRAWING

CLEVELAND MACHINE CONTROLS

OUTLINE DIMENSIONS
FOLDED AND IN-LINE
MOTOR AND GEARBOX

MATERIAL	FINISH	SCALE	DRAWN BY	APPROVED BY	DRAWING NUMBER	DNB
		REF	JHG	SM	D30-1083	
			DATE 10-14-92	DATE 10-16-12		

BLANK

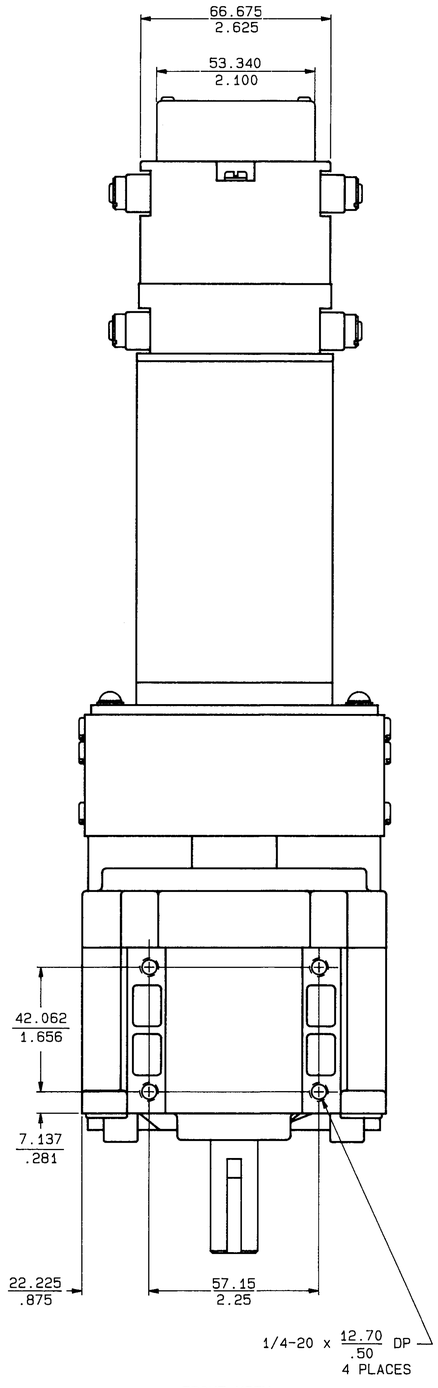

FRONT VIEW

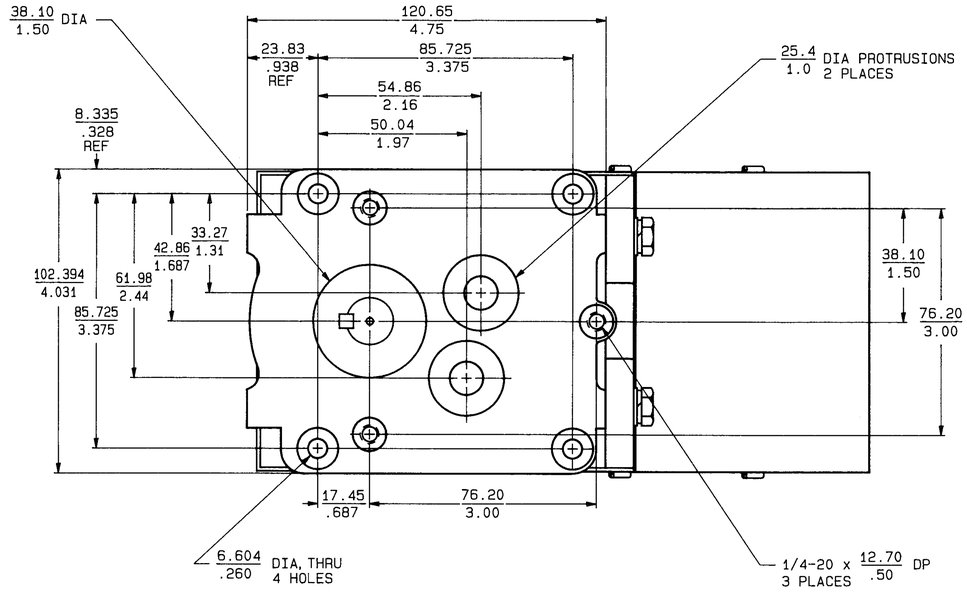

BOTTOM VIEW

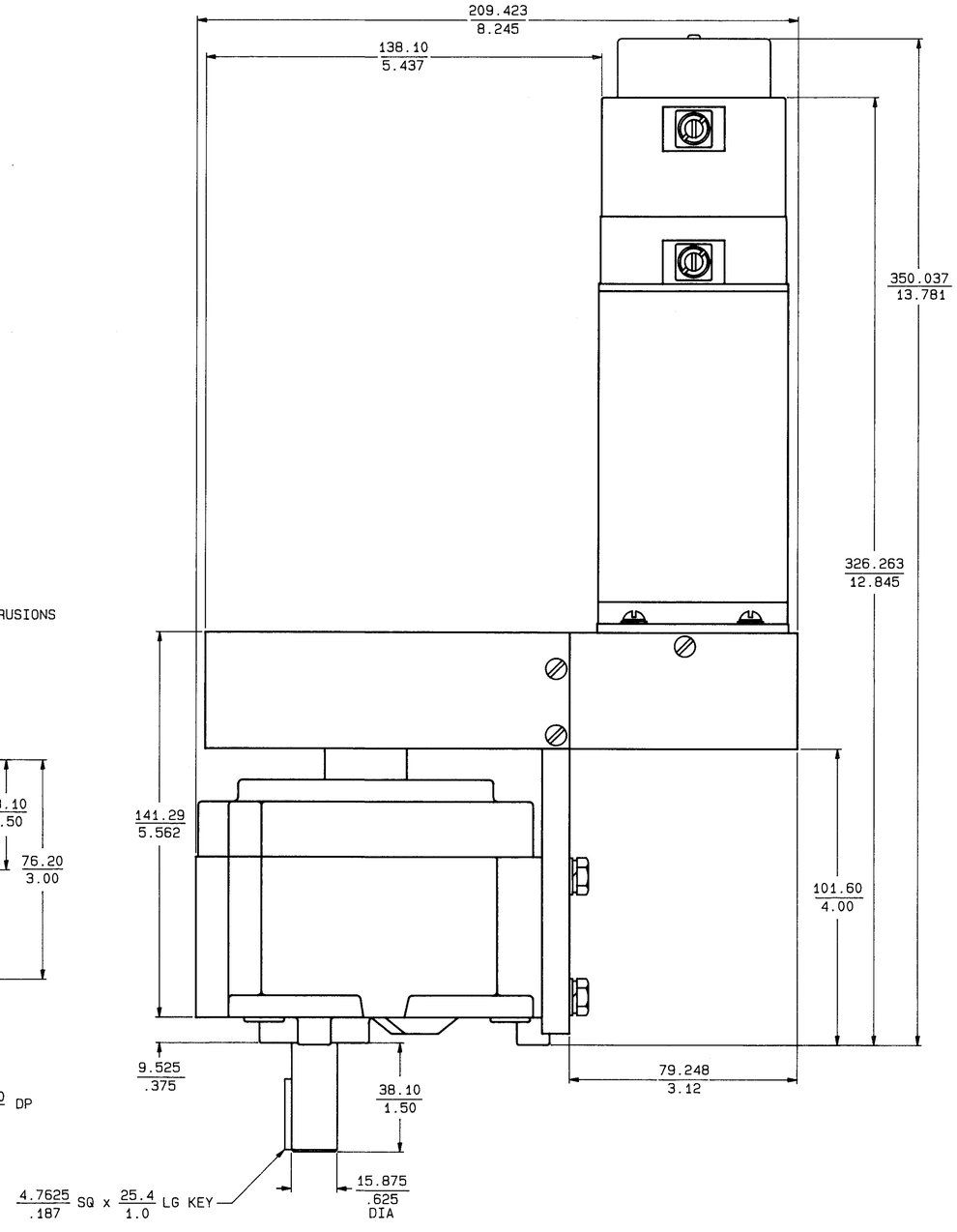

SIDE VIEW

E					TOLERANCES EXCEPT AS NOTED ORDINAL X.X ± .030 X.XX ± .015 X.XXX ± .005 ANGULAR ±0.5° DO NOT SCALE DRAWING
D					
C					
B					
A					
SYM	REVISION	ECO	BY	DATE	

CLEVELAND MACHINE CONTROLS

OUTLINE DIMENSIONS
FOLDED AND IN-LINE
MOTOR AND GEARBOX

MATERIAL	FINISH	SCALE	DRAWN BY	APPROVED BY	DRAWING NUMBER	CHG
		REF	JHG	SPR	D30-1083	
			DATE 10-14-92	DATE 10-16-92		

BLANK

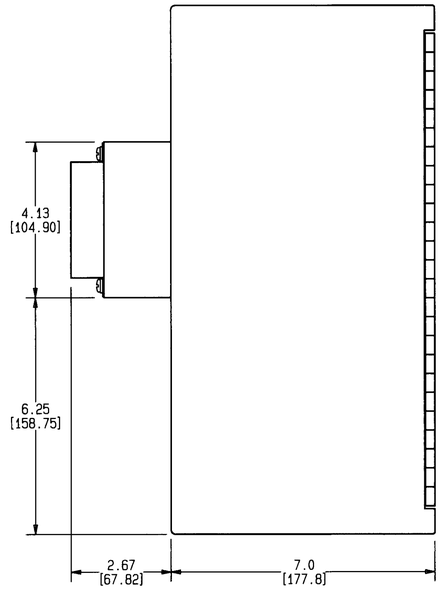

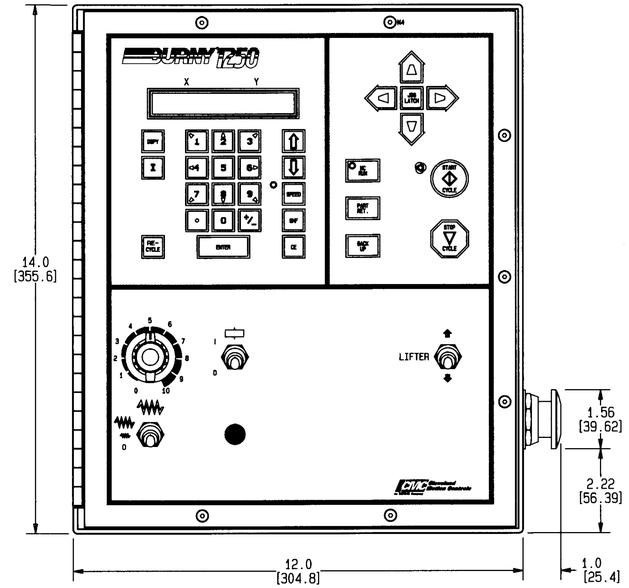

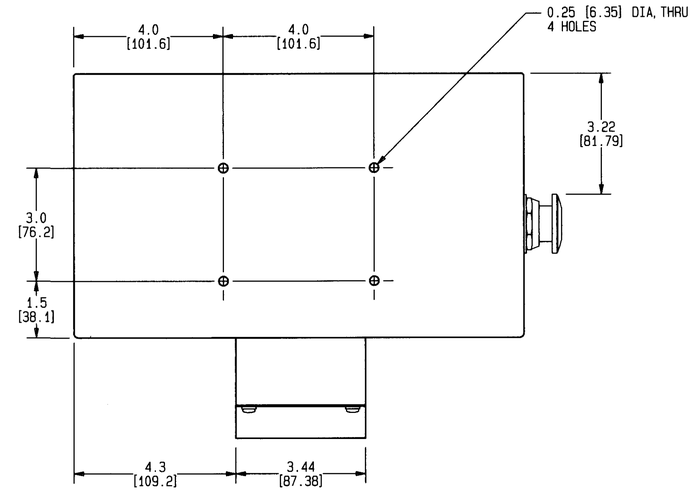

DIMENSIONS IN BRACKETS [XXX] ARE MILLIMETERS

This print is the property of Cleveland Motion Controls, Inc. and is furnished as confidential information only. It must not be copied, traced, or reproduced in any manner nor submitted to any outside parties for any purpose without our written permission. Any use of this print without permission of Cleveland Motion Controls, Inc. is a violation of our exclusive rights.

SYM	REVISION	ECO	BY	DATE
E				
D				
C				
B				
A	NEW CORPORATE LOGO	12332	KAP	07/98

TOLERANCES
(EXCEPT AS NOTED)
DECIMAL
X.X ± .030
X.XX ± .015
X.XXX ± .005
ANGULAR
± 0.5°
DO NOT SCALE DRAWING

Cleveland Motion Controls
An IMC Company

MATERIAL | FINISH | SCALE 1:2 | REF

OUTLINE DIMENSIONS
BURNY 1250 CABINET

DRAWN BY	APPROVED BY	DRAWING NUMBER	CHG
BRL	JFB	D30-60130	A
DATE 12-19-96	DATE 19 DEC 96		

BLANK

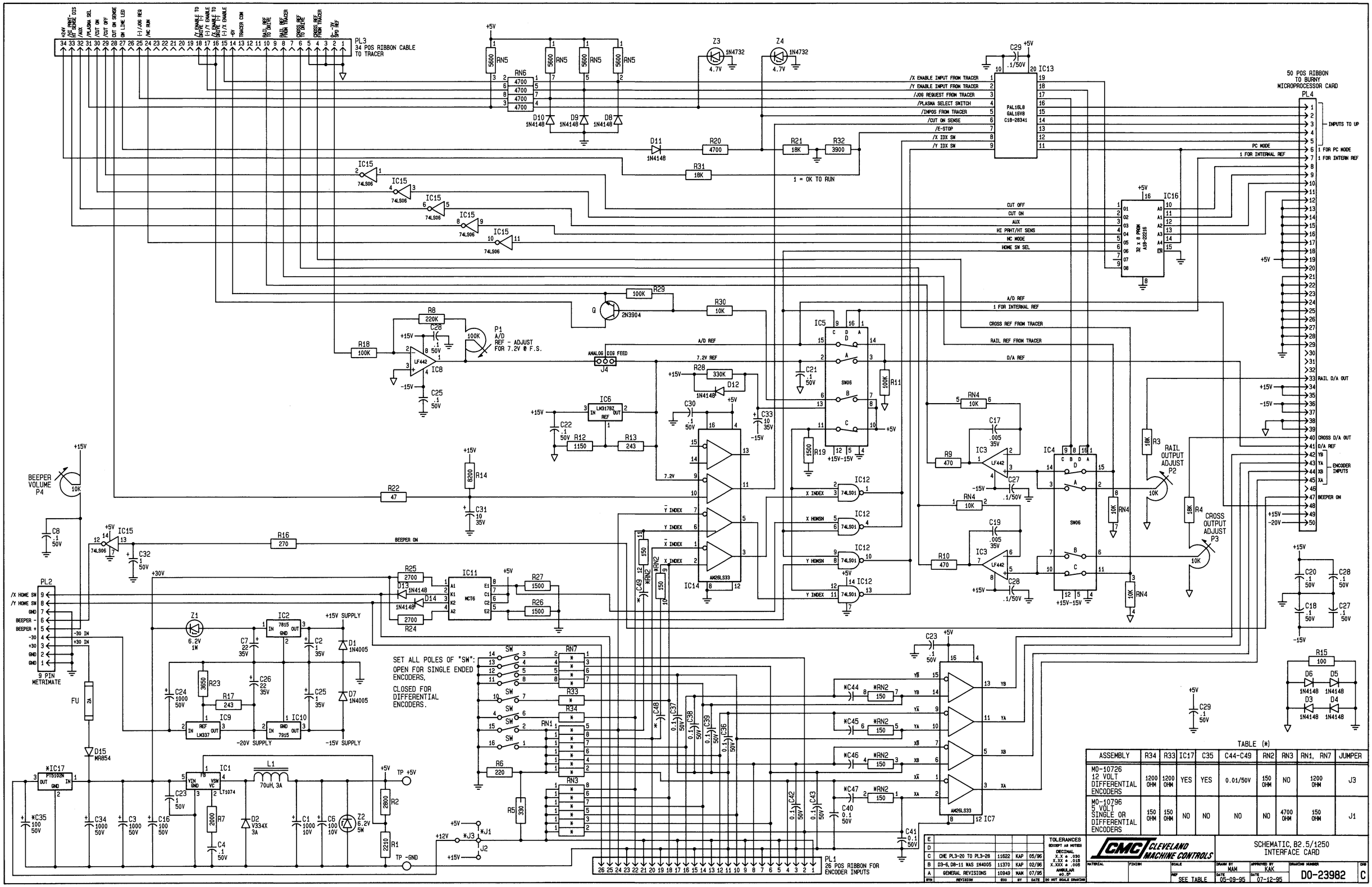

TABLE (*)

ASSEMBLY	R34	R33	IC17	C35	C44-C49	RN2	RN3	RN1, RN7	JUMPER
MO-10726 12 VOLT DIFFERENTIAL ENCODERS	1200 OHM	1200 OHM	YES	YES	0.01/50V	150 OHM	NO	1200 OHM	J3
MO-10796 5 VOLT SINGLE OR DIFFERENTIAL ENCODERS	150 OHM	150 OHM	NO	NO	NO	NO	4700 OHM	150 OHM	J1

SYM	REVISION	ECO	BY	DATE
E				
D				
C	CHE PL3-20 TO PL3-28	11622	KAP	05/96
B	D3-6, D8-11 WAS 1N4005	11370	KAP	02/96
A	GENERAL REVISIONS	10949	MAM	07/95

TOLERANCES
(EXCEPT AS NOTED)
DECIMAL
X.X ± .030
X.XX ± .015
X.XXX ± .005
ANGULAR
±0.5°
DO NOT SCALE DRAWING

CMC CLEVELAND MACHINE CONTROLS

SCHEMATIC, B2.5/1250
INTERFACE CARD

MATERIAL	FINISH	SCALE	DRAWN BY	APPROVED BY	DRAWING NUMBER	CHG
		REF SEE TABLE	MAM DATE 05-09-95	KAK DATE 07-12-95	D0-23982	C

BLANK

NOTE:UNLESS OTHERWISE SPECIFIED.

1.) REFERENCES: MO-10727 AND MO-12618.

2.) FOR MO-10727: PINS 13 AND 16 OF PLASMA CONNECTOR WIRE DIRECTLY TO PINS 13 AND 16 ON THE RELAY CARD PCB.
FOR MO-12618: PINS 13 AND 16 OF PLASMA CONNECTOR WIRE TO HARNESS MO-12617. RED WIRE TO PIN 13 AND BROWN WIRE TO PIN 16.

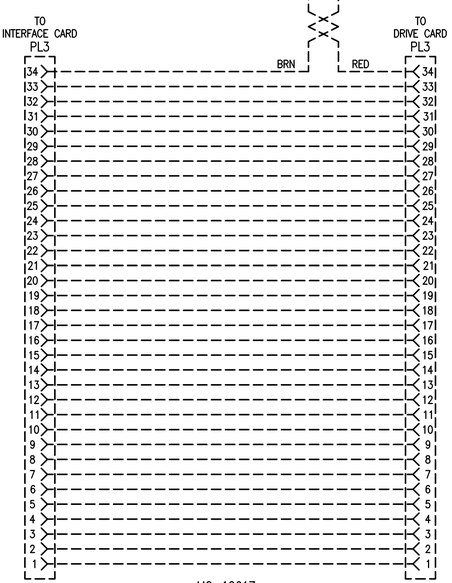

MO-12617

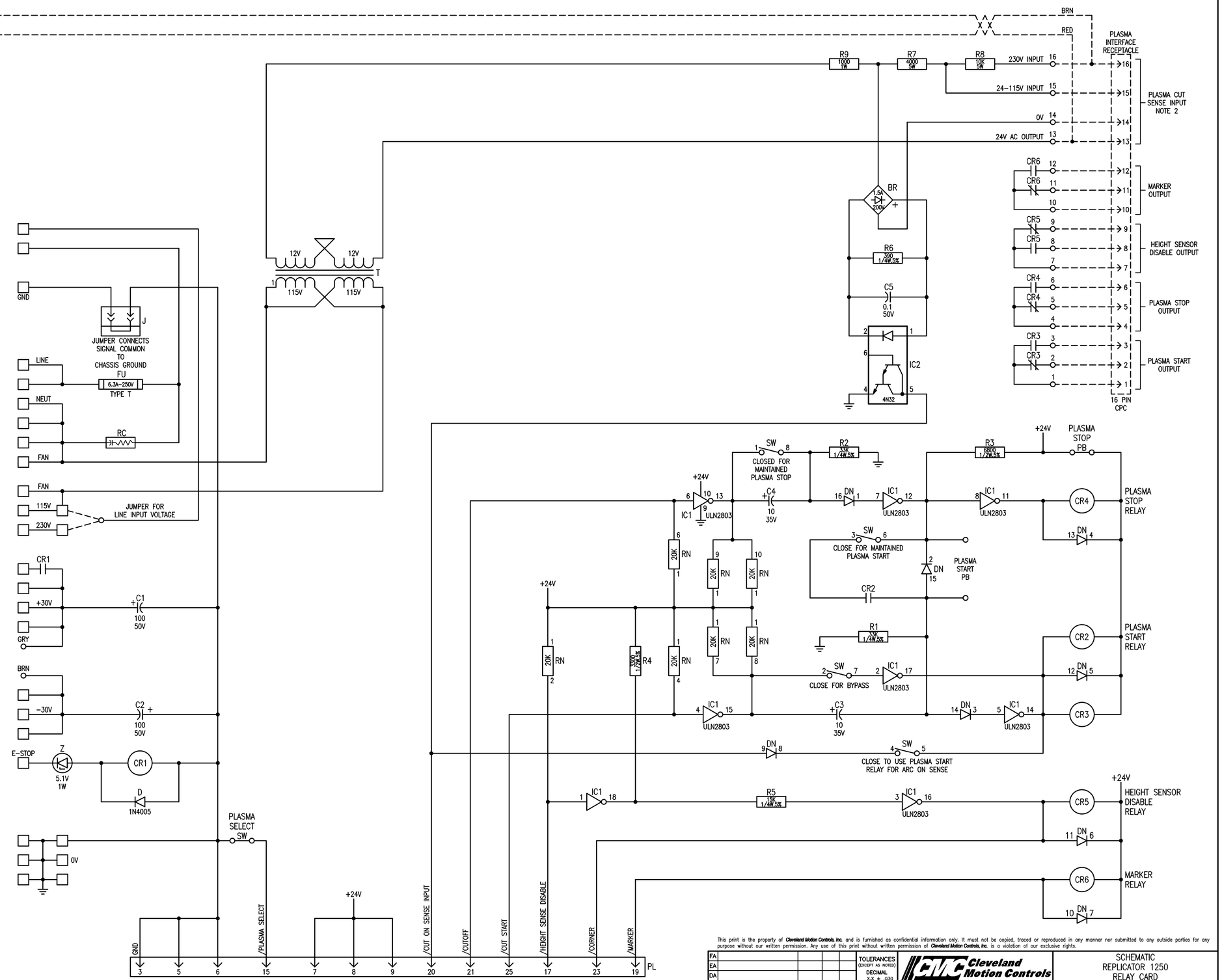

This print is the property of **Cleveland Motion Controls, Inc.** and is furnished as confidential information only. It must not be copied, traced or reproduced in any manner nor submitted to any outside parties for any purpose without our written permission. Any use of this print without written permission of **Cleveland Motion Controls, Inc.** is a violation of our exclusive rights.

SYM	REVISION	ECO	BY	DATE
FA				
EA				
DA				
CA				
BA	ADD MO-12617	CLE1534	GMC	06-00
AA	FUSE TO "CE" APPROVED FUSE	11868	KAP	12-96

TOLERANCES (EXCEPT AS NOTED)
DECIMAL
X.X ± .030
X.XX ± .015
X.XXX ± .005
ANGULAR ± 0.5°
DO NOT SCALE DRAWING

Cleveland Motion Controls
An IMC Company
7550 HUB PARKWAY CLEVELAND, OHIO

MATERIAL	FINISH	SCALE	REF
		NONE	NOTE 1

SCHEMATIC
REPLICATOR 1250
RELAY CARD

CAD DWG NO. : DO-23983BA.DWG
SIZE D | DRAWING NUMBER DO-23983 | REV BA
DRAWN BY GMC | APPROVED BY SPK
DATE 05-31-95 | DATE 06-07-95
SHEET 1 OF 1

BLANK

NOTE: UNLESS OTHERWISE SPECIFIED.
1.) ALL RESISTORS ARE 1/4W,5% UNLESS DESIGNATED BY AN ASTERISK(*) WHICH INDICATES 1/2W,1%.

JUMPER PL2 AS FOLLOWS:
NO BURNY–NO NOTCH FILTER:JUMPER 1–2,5–6
NO BURNY–WITH NOTCH FILTER:JUMPER 1–3,5–7,13–14,15–16
WITH BURNY–NO NOTCH FILTER:JUMPER 1–3,2–4,5–7,6–8
WITH BURNY–WITH NOTCH FILTER:JUMPER 1–3,5–7,13–14,15–16

This print is the property of Cleveland Motion Controls, Inc. and is furnished as confidential information only. It must not be copied, traced or reproduced in any manner nor submitted to any outside parties for any purpose without our written permission. Any use of this print without written permission of Cleveland Motion Controls, Inc. is a violation of our exclusive rights.

REV	REVISION	ECO	BY	DATE
BA	DN2 PIN OUT WAS 15 AND 2	CLE1482	GMC	04-00
AA	ORACLE RELEASE REVISION	-----	GMC	04-00

TOLERANCES (EXCEPT AS NOTED)
DECIMAL
X.X ± .030
X.XX ± .015
X.XXX ± .005
ANGULAR ± 0.5°
DO NOT SCALE DRAWING

Cleveland Motion Controls
An IMC Company
7550 HUB PARKWAY CLEVELAND, OHIO

MATERIAL | FINISH | SCALE: NONE | REF: MO-10773

SCHEMATIC
SERIES 1400
120W PWM DRIVE CARD

CAD DWG NO.: DO-23988A01.DWG | SIZE: D | DRAWING NUMBER: DO-23988 | REV: BA
DRAWN BY: GMC | APPROVED BY: SPK
DATE: 05-18-95 | DATE: 05-19-95
SHEET 1 OF 2

BLANK

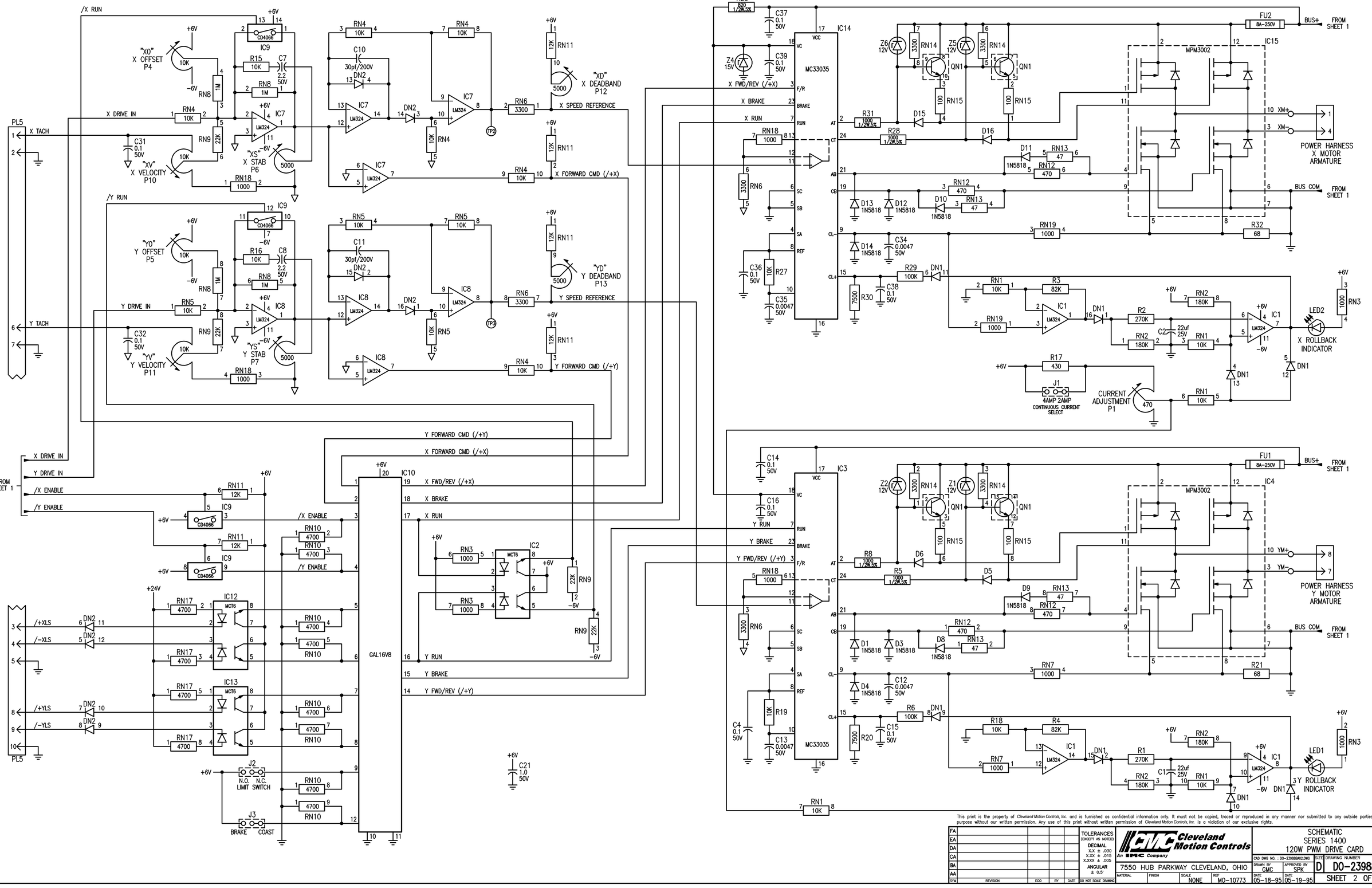

This print is the property of *Cleveland Motion Controls, Inc.* and is furnished as confidential information only. It must not be copied, traced or reproduced in any manner nor submitted to any outside parties for any purpose without our written permission. Any use of this print without written permission of *Cleveland Motion Controls, Inc.* is a violation of our exclusive rights.

FA					
EA					
DA					
CA					
BA					
AA					
SYM	REVISION	ECO	BY	DATE	

TOLERANCES (EXCEPT AS NOTED)
DECIMAL
X.X ± .030
X.XX ± .015
X.XXX ± .005
ANGULAR ± 0.5°
DO NOT SCALE DRAWING

Cleveland Motion Controls
An IMC Company
7550 HUB PARKWAY CLEVELAND, OHIO

MATERIAL	FINISH	SCALE	REF
		NONE	MO-10773

SCHEMATIC
SERIES 1400
120W PWM DRIVE CARD

CAD DWG NO.: DO-23988BA02.DWG

DRAWN BY	APPROVED BY	SIZE	DRAWING NUMBER	REV
GMC	SPK	D	DO-23988	BA

DATE	DATE
05-18-95	05-19-95

SHEET 2 OF 2

BLANK

COM PORT

	COMMON	1
	RX-RECEIVE	2
	TX-TRANSMIT	3
TEST PURPOSES ONLY	+5VDC	4
	+12VDC	5
	-12VDC	6
	COMMON	7
	RTS-CONTROL INPUT	8
	CTS-STATUS INPUT	9

MOTOR

1	T1
2	M2
3	CLUTCH (OPTIONAL)
4	T2
5	CLUTCH (OPTIONAL)
6	+ LIMIT
7	LIMIT COMMON
8	M1
9	- LIMIT

ENCODER

1	COMMON
2	/Z
3	/A
4	GROUND
5	/B
6	Z
7	+5V
8	A
9	B

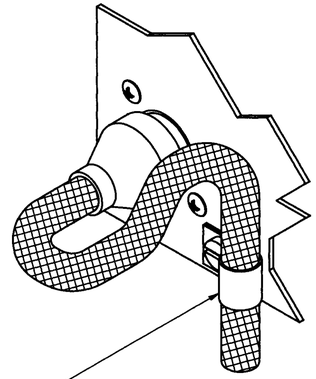

ALL EXTERNAL CABLES MUST HAVE THE EXTERNAL SHIELD GROUNDED TO THE ENCLOSURE WITH A METAL CABLE CLAMP.

LIFTER

SUPPLY − +

SUPPLY UP	1
	2
DOWN	3
CHASSIS GROUND	4

RS232 RS422 RMTR RENC COMM CMTR CENC

RX CTS TX RTS

LIFTER

ALL CABLES MUST HAVE EXTERNAL SHIELDS CONNECTED TO CABINET GROUNDING SCREWS BY THE 360 DEGREE METAL CLAMP.

PLASMA

PLASMA START OUTPUT	1	
	2	CR3
	3	CR3
PLASMA STOP OUTPUT	4	
	5	CR4
	6	CR4
HEIGHT SENSOR DISABLE OUTPUT	7	
	8	CR5
	9	CR5

MARKER OUTPUT	10	
	11	CR6
	12	CR6
	13	24V AC OUTPUT
	14	0V
PLASMA CUT SENSE INPUT	15	24V - 115V INPUT
	16	230V INPUT

AC POWER INPUT (200VA)
115/230VAC
50/60Hz

AC HOT INPUT	1
	2
	3
CHASSIS GROUND	4
AC NEUT INPUT	5
	6
CHASSIS GROUND	7

POWER

115/230 VAC
50/60 Hz

CAUTION
BEFORE APPLYING POWER
REFER TO MANUAL FOR PROPER
VOLTAGE SELECTION

WARNING:
DISCONNECT POWER
BEFORE SERVICING EQUIPMENT

PLASMA

BURNY 1250 INTERNAL RELAY PCB

LINE VOLTAGE JUMPER MUST BE SET FOR PROPER OPERATION PRIOR TO APPLYING POWER.

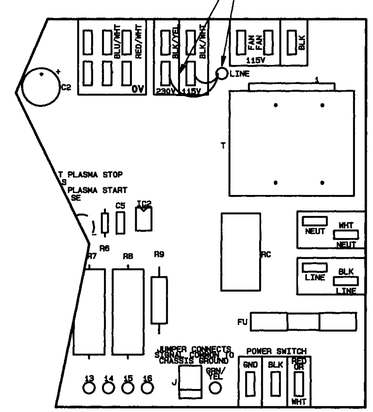

E						TOLERANCES EXCEPT AS NOTED DECIMAL X.X ± .030 X.XX ± .015 X.XXX ± .005 ANGULAR ±0.5° DO NOT SCALE DRAWING	CLEVELAND MACHINE CONTROLS
D							
C							
B							
A							
SYM	REVISION	ECO	BY	DATE		MATERIAL / FINISH / SCALE: REF	DRAWN BY: BRL DATE: 12-19-96

EXTERNAL CONNECTION DIAGRAM
BURNY 1250

APPROVED BY: JFB DATE: 12-19-96

DRAWING NUMBER: D0-42292

CHG

BLANK

"POWER"
AC POWER INPUT
7 PIN CPC
L 1 BLK
N 5 WHT
4 GRN/YEL
6
115/230VAC
50/60HZ
250VA REQUIRED
FOR DRIVE/CNC
ADD FOR RATING OF
LIFTERS/SOLENOIDS
IF EQUIPPED

DA GA FA GA

NOTE:

1.) REFERENCES: MYY-10770, MYY-11771
MYY-12667, MYY-11850, MYY-12293
MYY-12671

2.) + DENOTES OPTIONAL EQUIPMENT WHICH VARIES BY MODEL.

3.) HARNESS MO-12617 FOR: MYY-12293.
ALL OTHERS USE RIBBON CABLE A44-22154.

4.) MO-12618 FOR MYY-12293 OR MYY-12667
ALL OTHERS USE MO-10727.

5.) FOR MO-10727: PLASMA PINS 13 AND 16
WIRE TO THE RELAY CARD.
FOR MO-12618: PLASMA PINS 13 AND 16
WIRE INTO HARNESS MO-12617 AND RELAY
CARD POSITIONS 13 AND 16 ARE UNUSED.
PINS 13 AND 16 OF THE PLASMA CONNECTOR
ARE THEN FOR A N.C. EXT STOP RELAY
CONTACT. PLASMA CUT SENSE INPUT IS
THEN ONLY PINS 14 AND 15.

115V FAN
X08-28262

WHT BLK
NEUT LINE
FU 10A-250V
WIRE JUMPER FOR LINE VOLTAGE SELECTION
230V
115V
BLK/YEL
BLK/WHT
BLK
RC
T 24V 115V
FAN 115VAC
BLK RED OR WHT GND

PL
RIBBON CABLE TO TRACER POWER I/O CARD
26 POS RIBBON

TRANSFORMER C14-30132 CA
BLK 115V BLK/WHT 115V BLK/YEL
RED/YEL 22V RED/WHT 22V RED

RED/WHT
RED
RED
RED
RED
RED
0V
J
GRN/YEL
JUMPER CONNECTS SIGNAL COMMON TO CHASSIS GROUND
CHASSIS CONNECTION TO SIGNAL COMMON AT THIS POINT ONLY
TO FLOPPY OPTION SHEET 2 DA

RELAY CARD
MO-10727
OR
MO-12618
SCH:DO-23983
NOTE 4

GRY
GRY
GRY
GRY
+
BRN
BRN
−
BR1
CR1
E-STOP
+SW

DRIVE E-STOP
TURN TO RELEASE
BA
BR2
ORG RED
ORG RED

CLUTCH SWITCH

22AWG 22AWG 22AWG 22AWG 22AWG 18AWG 18AWG
RED BRN ORG WHT/BLU WHT/VIO ORG WHT
3 5 1 4 6 7 9 2 8
CLUTCH TACH LIMITS ARM
"RMTR"
9 PIN CPC

22AWG 22AWG 22AWG 22AWG 22AWG 18AWG 18AWG
BLU VIO GRY BLK WHT VIO BLU
3 5 1 4 6 7 9 2 8
CLUTCH TACH LIMITS ARM
"CMTR"
9 PIN CPC

PLASMA
16 PIN CPC
PLASMA START OUTPUT
PLASMA STOP OUTPUT
HEIGHT SENSOR DISABLE OUTPUT
MARKER OUTPUT
PLASMA CUT SENSE INPUT
NOTE 5
1
2 CR3
3 CR3
4
5 CR4
6 CR4
7
8 CR5
9 CR5
10
11 CR6
12 CR6
13 24V AC OUTPUT
14 0V
15 24V - 115V INPUT
16 230V INPUT

OPEN SW CLOSE
MOM 1 MAINTAINED PLASMA STOP
2 BYPASS
MOM 3 MAINTAINED PLASMA START
4 CUT SENSE

RED BRN

"LIFTER"
4 PIN CPC
LIFTER SWITCH
UP
DN
WHT BLK RED
1 2 3 4
BLK WHT RED
LIFTER MOTOR
LIFTER SUPPLY VOLTAGE

WHT BLK GRY VIO BLU WHT/VIO WHT/BLU ORG BRN RED
9 10 8 7 6 4 5 3 1 2

PL4 RELAY INTERFACE
PL5 TACHOMETER & LIMITS
PL1 SPEED REFERENCE INPUT

FA GA
BURNY
120W PWM POWER DRIVE CARD
MO-12565 SCH: DO-21762
OR
MO-10773 SCH: DO-23988

RED 5 0V
RED 6 0V
BLK 3 (+)
ORG 1 RAIL MOTOR
WHT 4 RAIL MOTOR
VIO 7 CROSS MOTOR
BLU 8 CROSS MOTOR
DC POWER INPUT
MOTOR OUTPUT

TO BURNY
34 POS
PL3
NOTE 3
34 POS
PL3
TO I/O CARD

RED 1 0V
RED 2 0V
GRY 3 (+)
BRN 4 (−)
ORG 5
WHT 6
ORG WHT
2 1
2 1
BEEPER ASSEMBLY MO-03067

PL1 POWER INPUT BEEPER OUTPUT
INTERFACE CARD
MO-10796
SCH: DO-23982
TO MICROPROCESSOR CARD
PL2
50 POS RIBBON
ENCODER INPUTS
PL4
26 POS RIBBON

PL3
ENCODER INPUT CARD
MO-07231
SCH: BO-21240
POS 4 EMPTY FOR KEY PIN
POS 4 EMPTY FOR KEY PIN
"RENC"
RAIL AXIS
ENCODER INPUT
9 PIN CPC
"CENC"
CROSS AXIS
ENCODER INPUT
9 PIN CPC

HARNESS
MO-12617
FA

HIGH SPEED RANGE
LOW SWITCH
OFF
SPEED POT
500

RECP1
5
15
16
BURNY 1250
SPEED ADJUST CARD
MO-10863
SCH: BO-23996

FRONT PANEL
FOR MYY-10770, MYY-10771 & MYY-11850
CMC P/N D04-28437
FOR MYY-12293 & MYY-12667 FA GA
CMC P/N D04-31653
FOR MYY-12671
CMC P/N D04-32493

12 POS RIBBON

RCA1
1CONN
FA GA
BURNY 2.5
MICROPROCESSOR CARD
FOR ALL OTHERS
MO-11249 SCH: DO-24667
FOR ALL OTHERS
MO-12438 SCH: DO-21721
TO INTERFACE CARD
KEYBOARD INPUT

SERIAL COMM PORT
2RCA
EXTENSION CABLE
10 POS RIBBON
10 POS RIBBON A44-30328
TO PL2 OF MO-11833 SHEET 2
CONNECTION FOR NO FLOPPY OPTION
DA
CONNECTION TO FLOPPY OPTION
10 POS RIBBON
10 POS RIBBON A44-30327
TO PL4 OF MO-11833 SHEET 2
GRY RED
+24V GND
RS232/422 ADAPTER
MO-07320
SCH: CO-27617
(ISOLATED)
"COMM"
RS232/422
COMMUNICATION PORT
9 PIN CPC

This print is the property of Cleveland Motion Controls, Inc. and is furnished as confidential information only. It must not be copied, traced or reproduced in any manner nor submitted to any outside parties for any purpose without our written permission. Any use of this print without written permission of Cleveland Motion Controls, Inc. is a violation of our exclusive rights.

LA					FA	ADD FOR B2.5 PLUS PROCESSOR	CLE1599	KAP	08/00	TOLERANCES (EXCEPT AS NOTED) DECIMAL X.X ± .030 X.XX ± .015 X.XXX ± .005 ANGULAR ± 0.5°
KA					EA	ADD MO-12617	CLE1534	GMC	06-00	
JA					DA	ADD FLOPPY OPTION	CLE1057	KAP	08/99	
IA					CA	C14-30132 WAS B14-28123	12709	KAP	07/98	
HA					BA	ADD BR2	11294	KAP	11/95	
GA	CHG "PLUS" BOM NUMBERS	CLE1760	KAP	01/01	AA	ENCODER WAS RS232	11136	KAP	10/95	
DYM	REVISION	ECO	BY	DATE	SYM	REVISION	ECO	BY	DATE	DO NOT SCALE DRAWING

Cleveland Motion Controls
An IMC Company
7550 HUB PARKWAY CLEVELAND, OHIO

SCHEMATIC,
BURNY 1250

CAD DWG NO. : DYY-23995GA01.DWG
SIZE D | DRAWING NUMBER DYY-23995 | REV GA
DRAWN BY: KAP | APPROVED BY: SPK
MATERIAL | FINISH | SCALE | REF NOTE 1 | DATE 20 JUL 95 | DATE 25 JUL 95
SHEET 1 OF 2

BLANK

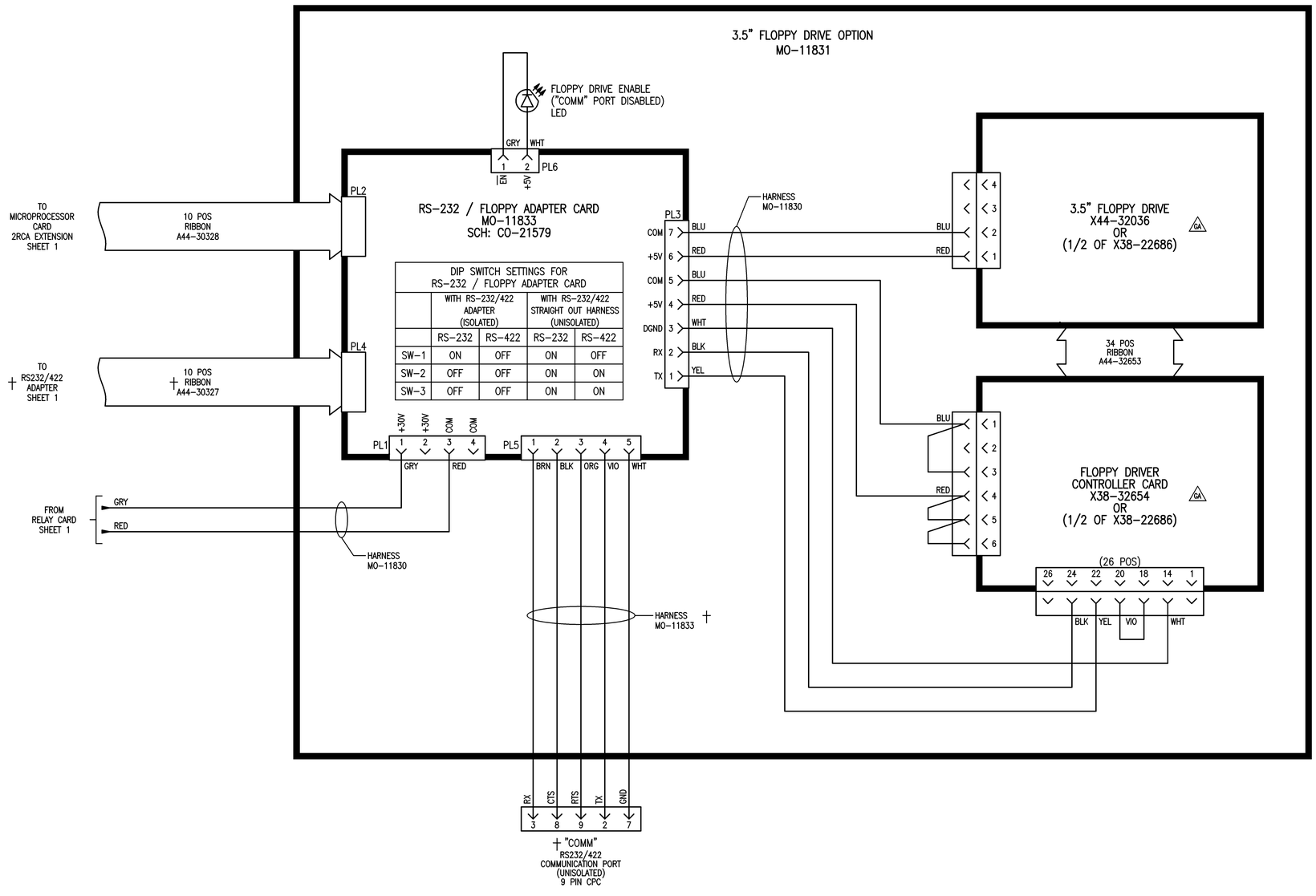

This print is the property of **Cleveland Motion Controls, Inc.** and is furnished as confidential information only. It must not be copied, traced or reproduced in any manner nor submitted to any outside parties for any purpose without our written permission. Any use of this print without written permission of **Cleveland Motion Controls, Inc.** is a violation of our exclusive rights.

SYM	REVISION	ECO	BY	DATE
FA				
EA				
DA				
CA				
BA				
AA				

TOLERANCES (EXCEPT AS NOTED)
DECIMAL
X.X ± .030
X.XX ± .015
X.XXX ± .005
ANGULAR ± 0.5°
DO NOT SCALE DRAWING

Cleveland Motion Controls
An IMC Company
7550 HUB PARKWAY CLEVELAND, OHIO

SCHEMATIC, BURNY 1250

MATERIAL	FINISH	SCALE	REF

CAD DWG NO. : DYY-23995GA02.DWG
DRAWN BY: KAP
APPROVED BY: SSH
DATE: 31 AUG 99
DATE: 31 AUG 99
SIZE: D
DRAWING NUMBER: DYY-23995
REV: GA
SHEET 2 OF 2

BLANK