DORNA®

EPS-B1 SERIES AC SERVO SYSTEMS

CE

DORNA

COMPANY PROFILE

DORNA Technology Co.,Ltd

DORNA Technology Co., Ltd was established in 2006. We are strategically located in Jiashan, Zhejiang, which is the heart of Long River Delta and only one hour's drive to Shanghai's Pudong

DORNA has a strong work force of over 300 employees consisting of highly educated management teams and skilled workers. DORNA possess numerous independent intellectual property rights and specialize in the research & development, production, sales and service of AC variable frequency drives (inverters), AC servo systems (servo drives & servo motors), stepper drives & motors and rotary encoders.

Our products have been widely used in CNC machine tools, textile machines, packaging machines, printing machines, food-making and pharmaceutical equipment, carving machines, spring machines, plastic machines, manipulators & robotics etc.

DORNA will make persistent efforts to create more innovations and offer better products and services for clients. Meanwhile, we are looking forward to cooperate with business partners globally.

The following content is for reference only and subject to change without prior notifications. Please contact with our Oversea Business Division for latest information: oversea@cn-dorna.com.

PRODUCT DISPALY/

THE ALL NEW
EPS-B1 SERIES AC SERVO SYSTEMS

<<

DORNA

CONTENTS

Product features ---------- 04

Model identifications ---------- 07

Selection tables ---------- 09

Configuration and interfaces ---------- 10

Standard wiring diagrams ---------- 11

Servo drive specifications ---------- 12

Servo drive dimensions ---------- 14

Servo motor specifications & dimensions ---------- 17

SMARTER

- **EtherCAT® filed-bus protocol**
  EPS-B1 series servo drives are now equipped with EtherCAT® for automation applications requiring short data update times with low communication jitter and reduced hardware costs.

- **Load inertia detection**
  EPS-B1 series servo drives can automatically detect load inertia for better gain tuning.

- **Internal control functions**
  EPS-B1 series servo drives can be easily be programmed for internal position/internal speed/internal torque controls to exercise certain applications without PLCs.

FASTER

- **Shortened positioning time**
  Position setting time of the device can be greatly reduced by using the new algorithms.

- **Quick instruction tracking**
  As the new position and speed controller is adopted, position control tracking is greatly improved, and position deviation can be up to ≒0.

- **Response frequency up to 1KHz bandwidth**
  State-of-the-art chips are utilized to improve calculating speed; new algorithms are developed for speed loop and current loop to improve the servo system's response control performance.

- **Input and output pulse frequency 4Mbps**
  EPS-B1 series servo drives now can process pulse forms up to 4Mbps, both in semi-closed loop and fully-closed loop controls.

MORE RELIABLE

- **3 times overload**
  EPS-B1 series servo drives have the capacity of 3 times overload, which improves the servo's responsiveness.

- **Grade 2 Notch Filter**
  Grade-2 notch filter that can reduce phase lag is used to restrain resonance of mechanical system and improve equipment's speed response.

- **Restrained external interferences**
  External interferences can be restrained effectively by expanding the new interference detection function

- **Regenerative functions**
  EPS-B1 series servo drives have built-in regenerative resistors (optional) that can absorb regenerated electricity at decelerating. When the built-in regenerative resistor is not enough, external regenerative resistor can be used.

- **Built-in dynamic brake (optional)**
  EPS-B1series servo drives have built-in dynamic brakes (DB) for emergency braking. Various motor stop modes can be set for Servo OFF, forward/backward rotation inhibition, power OFF, or stop due to failure.

SMT Workshop

- **Low cogging torque**
  By using the new magnetic field analysis design and motor processing technology, the motor's torque pulsation is reduced, thus to improve speed stability and reduce servo system's torque pulsations.

- **Fractions of Newton metres**
  40mm flange servo motors are recently introduced with rated power as low as 0.05KW.

- **Hundreds of Newton metres**
  200mm flange servo motors are also recently introduced, with torque up to 140 N*m and rated power up to 44KW.

NEW ENCODERS

- **High resolution encoders**
  Now EPS-B1 series can support up to 20 bit (1,048,576 pulses per revolution) encoders to improve positioning accuracy and low-speed stability.

- **More feedback devices supported**
  Users can now choose feedback devices of different mechanisms including optical encoders, magnetic encoders and resolvers.

Assembly line

SERVO DRIVE MODEL INDENTIFICATIONS /

EPS – B1 – 0D75 A A – ■■■■

1 2 3 4 5 6

1 PRODUCT NAME: EPS

2 PRODUCT SERIES:
B1 SERIES

3 DRIVE RATED POWER

SYMBOL	DEFINITION	SYMBOL	DEFINITION
0D05	0.05KW	02D2	2.2KW
0D10	0.1KW	0003	3.0KW
0D20	0.2KW	04D5	4.5KW
0D40	0.4KW	05D5	5.5KW
0D75	0.75KW	07D5	7.5KW
0001	1.0KW	0011	11KW
01D2	1.2KW	0015	15KW
01D5	1.5KW	0022	22KW

4 INPUT VOLTAGE

SYMBOL	DEFINITION
A	SINGLE/THREE PHASE 220VAC
B	THREE PHASE 380VAC

5 HARDWARE VERSION

6 FACTORY CODE

SERVO MOTOR MODEL IDENTIFICATIONS /

130 DN M A 1 – 0001 C K A M – ■■■■

1 2 3 4 5 6 7 8 9 10 11

1 MOTOR FLANGE (MM)

SYMBOL	DEFINITION	SYM BOL	DEFINITION
40	40 MM FLANGE	130	130 MM FLANGE
60	60 MM FLANGE	180	180 MM FLANGE
80	80 MM FLANGE	200	200 MM FLANGE
110	110 MM FLANGE	220	220 MM FLANGE

2 PRODUCT NAME: DN

3 MOTOR ROTARY INERTIA

SYMBOL	DEFINITION
M	MEDIUM INERTIA
H	HIGH INERTIA

4 VOLTAGE CLASS

SYMBOL	DEFINITION
A	220V VOLTAGE CLASS
B	380V VOLTAGE CLASS

5 MOTOR POLE PAIRS

SYMBOL	DEFINITION
1	4 POLE PAIRS
2	5 POLE PAIRS

6 MOTOR RATED POWER

SYMBOL	DEFINITION	SYMBOL	DEFINITION
0D05	0.05KW	02D2	2.2KW
0D10	0.1KW	0003	3.0KW
0D20	0.2KW	04D5	4.5KW
0D40	0.4KW	05D5	5. 5KW
0D75	0.75KW	07D5	7.5KW
0001	1.0KW	0011	11KW
01D2	1.2KW	0015	15KW
01D5	1.5KW	0022	22KW

7 MOTOR RATED SPEED

SYMBOL	DEFINITION	SYMBOL	DEFINITION
A	1000 RPM	D	3000 RPM
B	1500 RPM	E	2500 RPM
C	2000 RPM		

8 FEEDBACK DEVICE TYPE

SYMBOL	DEFINITION
K	5000-LINE (LINE SAVING, GAIN)
J	17-BIT SERIAL (ABSOLUTE)
S	20-BIT SERIAL (GAIN)
R	RESOLVER

9 MOTOR HOLDING BRAKE SELECTION

SYMBOL	DEFINITION
A	WITHOUT HOLDING BRAKE
B	WITH HOLDING BRAKE

10 KEY SLOT/OIL SEAL SELECTION

SYMBOL	KEY SOLT	OIL SEAL
K	YES	NO
Y	NO	YES
M	YES	YES
N	NO	NO

11 FACTORY CODE

SERVO SYSTEMS SELECTION TABLES /

EPS-B1 AC SERVO SYSTEMS

Voltage Class	Rated power	Servo drive			Servo motor			
		Model	Pa012 Value	Case Type	Flange (mm)	Model	Rated speed	Rated torque
220V	0.2KW	EPS-B1-0D20AA	2	A	60	60DNMA1-0D20D	3000rpm	0.64 N·M
	0.4KW	EPS-B1-0D40AA	3	A	60	60DNMA1-0D40D	3000rpm	1.27 N·M
	0.75KW	EPS-B1-0D75AA	12	B	80	80DNMA1-0D75D	3000rpm	2.37 N·M
	1KW	EPS-B1-0001AA	13	B	80	80DNMA1-0001D	3000rpm	3.2 N·M
	1KW	EPS-B1-0001AA	33	B	130	130DNMA1-0001C	2000rpm	5 N·M
	1.2KW	EPS-B1-01D5AA	25	B	110	110DNMA1-01D2D	3000rpm	4 N·M
	1.2KW	EPS-B1-01D5AA	34	B	130	130DNMA1-01D2C	2000rpm	6 N·M
	1.5KW	EPS-B1-01D5AA	35	B	130	130DNMA1-01D5C	2000rpm	7.2 N·M
	1.5KW	EPS-B1-02D2AA	41	C	130	130DNMA1-01D5C	2000rpm	7.2 N·M
	1.8KW	EPS-B1-01D5AA	29	B	110	110DNMA1-01D8D	3000rpm	6 N·M
	2.2KW	EPS-B1-02D2AA	42	C	130	130DNMA1-02D2C	2000rpm	10.5 N·M
	3KW	EPS-B1-0003AA	45	C	130	130DNMA1-0003C	2000rpm	14.33 N·M
	3KW	EPS-B1-0003AA	70	C	180	180DNMA1-0003B	1500rpm	19.1 N·M
	4.5KW	EPS-B1-04D5AA	72	D	180	180DNMA1-04D5B	1500rpm	28.6 N·M
380V	2.2KW	EPS-B1-02D2BA	42	C	130	130DNMB1-02D2C	2000rpm	10.5 N·M
	3KW	EPS-B1-0003BA	45	C	130	130DNMB1-0003C	2000rpm	14.33 N·M
	3KW	EPS-B1-0003BA	70	C	180	180DNMB1-0003B	1500rpm	19.1 N·M
	4.5KW	EPS-B1-04D5BA	72	C	180	180DNMB1-04D5B	1500rpm	28.6 N·M
	5.5KW	EPS-B1-05D5BA	73	D	180	180DNMB1-05D5B	1500rpm	35N·M
	7.5KW	EPS-B1-07D5BA	74	D	180	180DNMB1-07D5B	1500rpm	47.7N·M
	11KW	EPS-B1-0011BA	109	E	180	180DNMB1-0011B	1500rpm	70 N·M
	15KW	EPS-B1-0015BA	125	E	220	200DNMB1-14D7C	2000rpm	70 N·M
	22KW	EPS-B1-0022BA	135	E	220	200DNMB1-0022C	2000rpm	105 N·M

CONFIGURATION AND INTERFACES /

EPS-B1 AC SERVO SYSTEMS

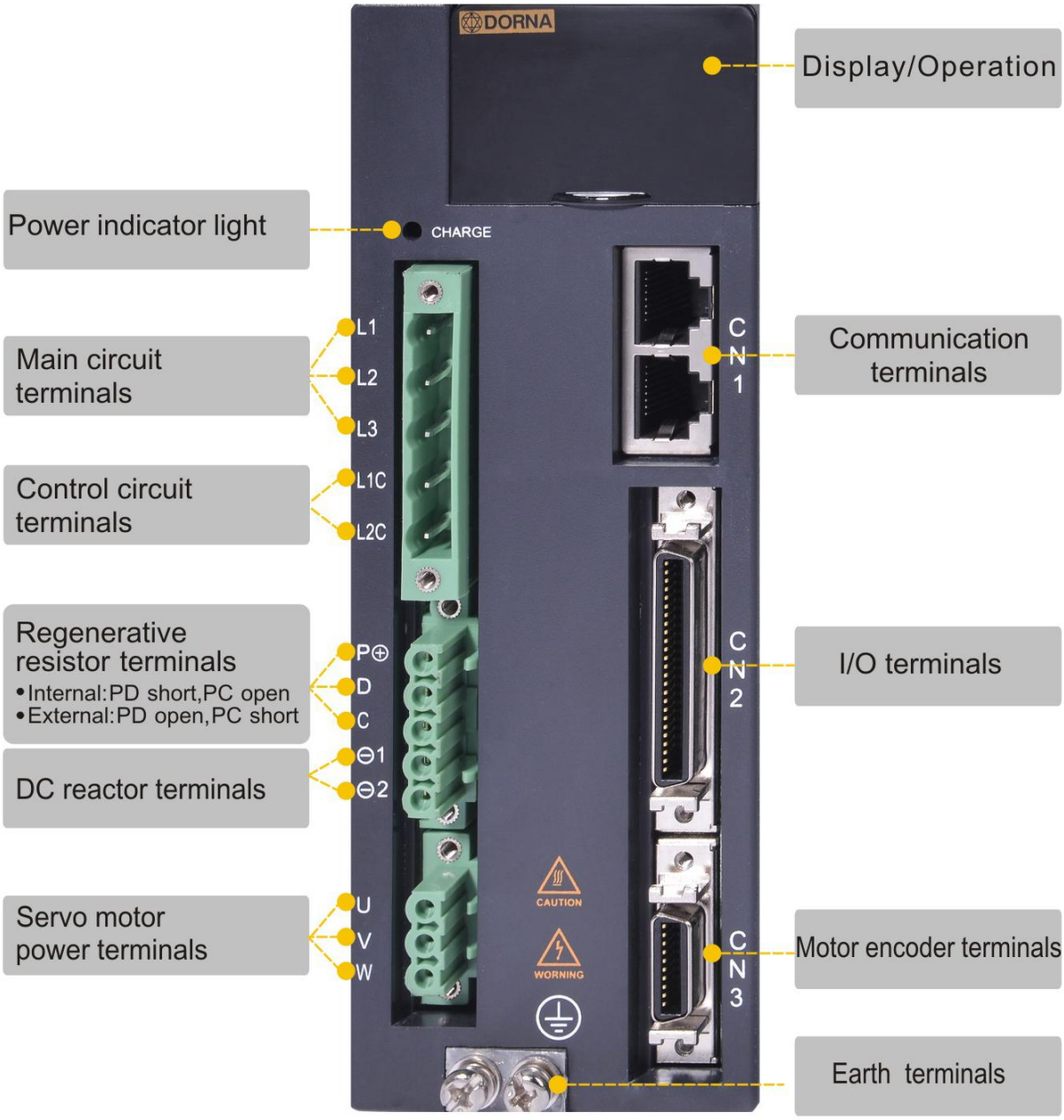

STANDARD WIRING DIAGRAMS/

EPS-B1 AC SERVO SYSTEMS

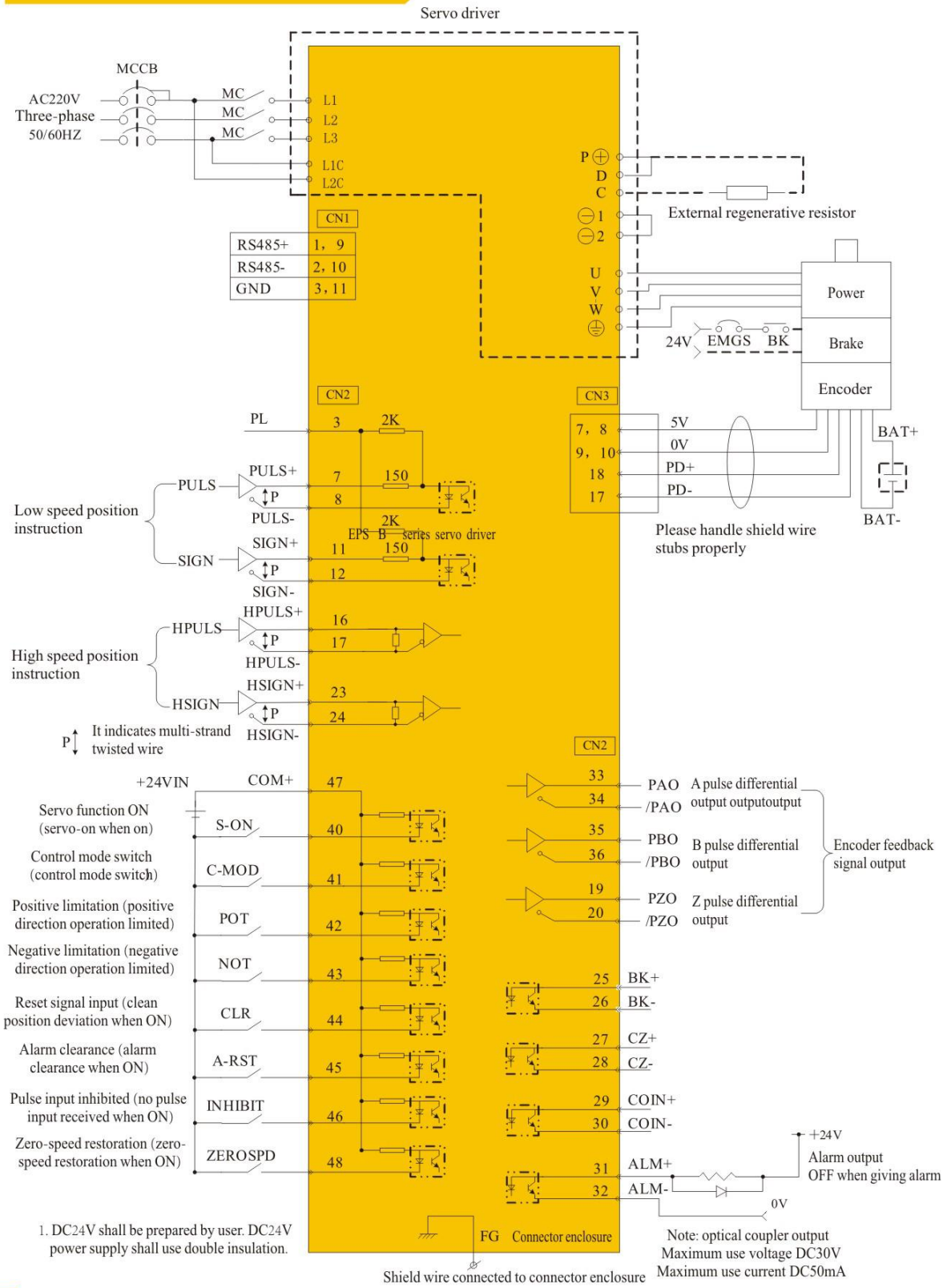

SERVO DRIVE SPECIFICATIONS /

Basic specifications			
Input voltage	220VAC		Singe/Three Phase 220VAC -15%~+10%, 50/60Hz
	380VAC		Three Phase 380VAC -15%~+15%, 50/60Hz
Control mechanism			Single/Three phase full wave rectification IGBT PWM control, sine-wave current control
Feedback devices			5000-LINE (LINE SAVING, GAIN) 17-BIT SERIAL (GAIN) 17-BIT SERIAL (ABSOLUTE) 20-BIT SERIAL (GAIN) 2500-LINE MAGNETIC
Use conditions	Ambient temperature		Use temperature: 0~+55℃ Storage temperature: -20~85℃
	Humidity		Below 90%RH (no freezing or condensing)
	Vibration		4.9 m/s^2~19.6 m/s^2
	Protection class/cleanness		Protection class: IP10; Cleanness: 2 But should be: · With no corrosive or combustible gas · With no water, oil or drug splashing · With little dust, ash, salt or metallic powder
	Altitude		Below 1000m
Applicable standard			CE
Structure			Pedestal installation type
Performance	Speed control precision		1:5000
	Speed fluctuation range	Load fluctuation	0 ~100% load: below ?0.01% (at rated speed)
		Voltage fluctuation	Rated voltage ±10% : 0.001% (at rated speed)
		Temperature fluctuation	25±25℃: below±0.1% (at rated speed)

	Torque control precision (repeatable)		±3%	
	Soft start time		0~10S (acceleration or deceleration)	
Input/output signals	Encoder pulse output		Line drive output: A Phase, B Phase, Z Phase Pulse count: 5000 line-saving encoder: 16~5000; 17 bit serial encoder:16~16384; 20 bit serial encoder: 16~1,048,576.	
	Sequential input signals	Assignable input signals	Pin number	8
			Functions	S-ON, C-MODE, POT, NOT, CLR, A-RST, GAIN, INHIBIT, ZEROSPD, PCL, NCL etc.
	Sequential output signals	Unassignable output signals	Pin number	1 (ALM)
		Assignable output signals	Pin number	3
			Functions	ALM, COIN, CZ, BK-OFF, S-RDY, etc.
Communication functions	RS485	1:N	With relay, maximum N=31	
		Address setting	By parameter setting	
		Devices	PC, uppder controller	
	EtherCAT		EPS-B1 series only	
Display/keypad			7 LED X 5 bit, 4 buttons	
Dynamic brake (DB) (optional)			At Servo OFF, forward/backward rotation inhibition, power OFF, or stop due to failure.	
Regenerative functions			Internal or external	
Over-travel (OT) protections			POT,NOT. DB, deceleration to stop, coast to stop.	
Protection functions			Over-current, over-voltage, under-voltage, over-load, regenerative fault, etc.	

SERVO DRIVE CURRENTS /

(Important when choosing the correct servo drive for the servo motor)

Item	Model	Rated current	Maximum current
1	EPS-B1-0D10A	1.3A	3.9A
2	EPS-B1-0D20A	2.0A	6.0A
3	EPS-B1-0D40A	3.0A	9.0A
4	EPS-B1-0D75A	4.0A	11.5A
5	EPS-B1-0001A	6.0A	16.0A
6	EPS-B1-01D5A	7.6A	18.0A
7	EPS-B1-02D2A	11.5A	30.0A
8	EPS-B1-0003A	15.5A	42.0A
9	EPS-B1-04D5A	19.0A	47.0A
10	EPS-B1-01D5B	4.5A	13.5A
11	EPS-B1-02D2B	6.0A	18.0A
12	EPS-B1-0003B	8.0A	24.0A
13	EPS-B1-04D5B	10A	30A
14	EPS-B1-05D5B	13A	39A
15	EPS-B1-07D5B	18A	48A
16	EPS-B1-0011B	25A	63A
17	EPS-B1-0015B	35A	95A
18	EPS-B1-0022B	48A	125A

SERVO DRIVE DIMENSIONS

A Type case: 220V class 0.05KW ~ 0.4KW

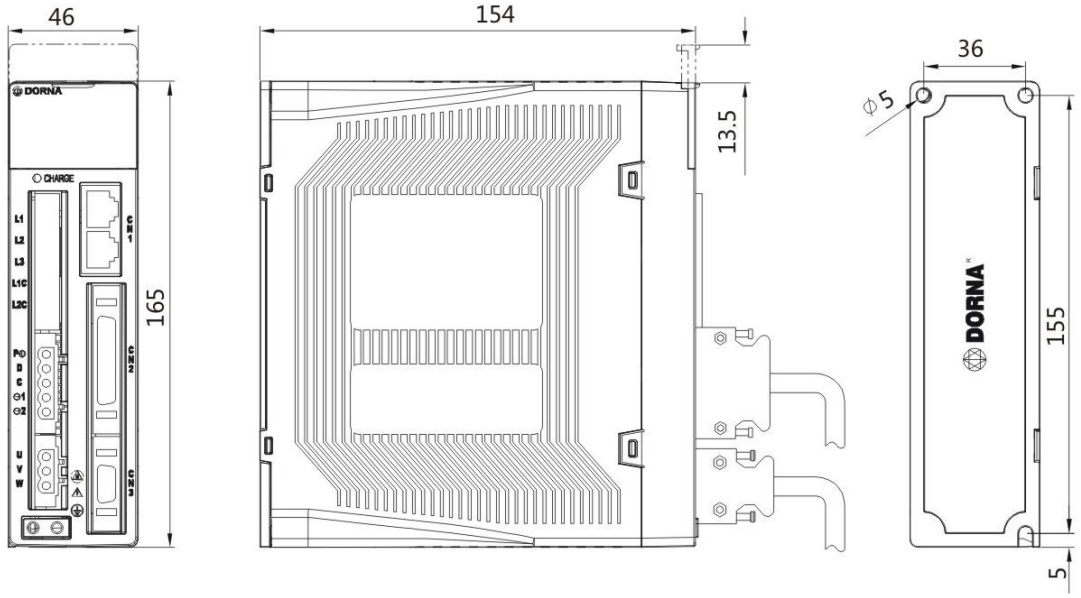

SERVO DRIVE DIMENSIONS /

B Type case: 220V class 0.75KW ~ 1.5KW

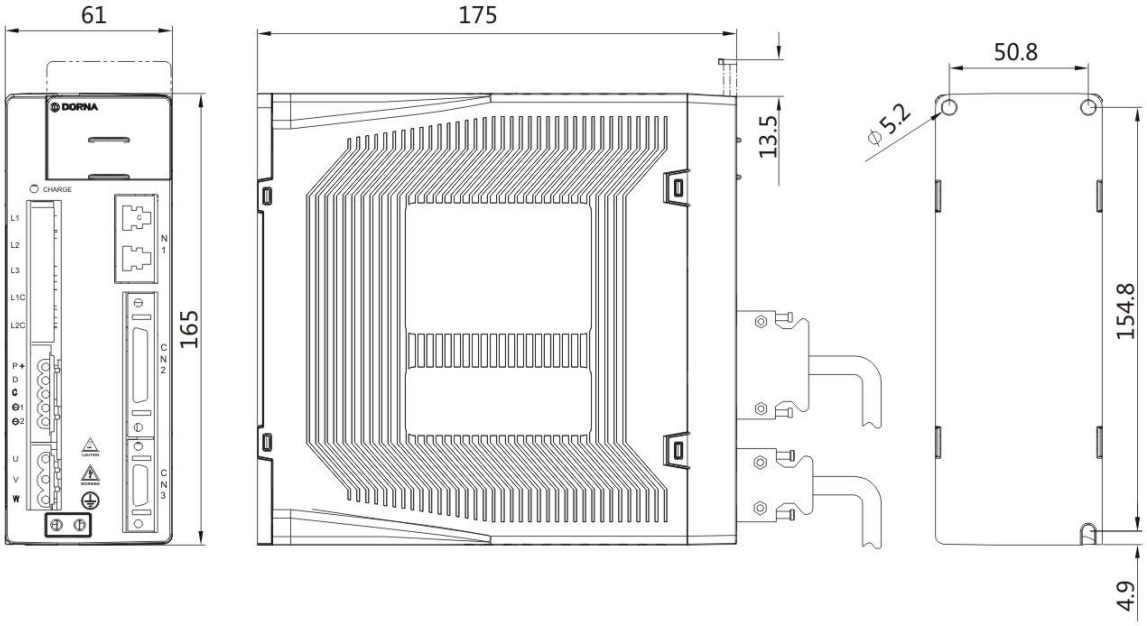

C Type case: 220V class 2.2KW~3KW; 380V class1.5KW ~ 4.5KW

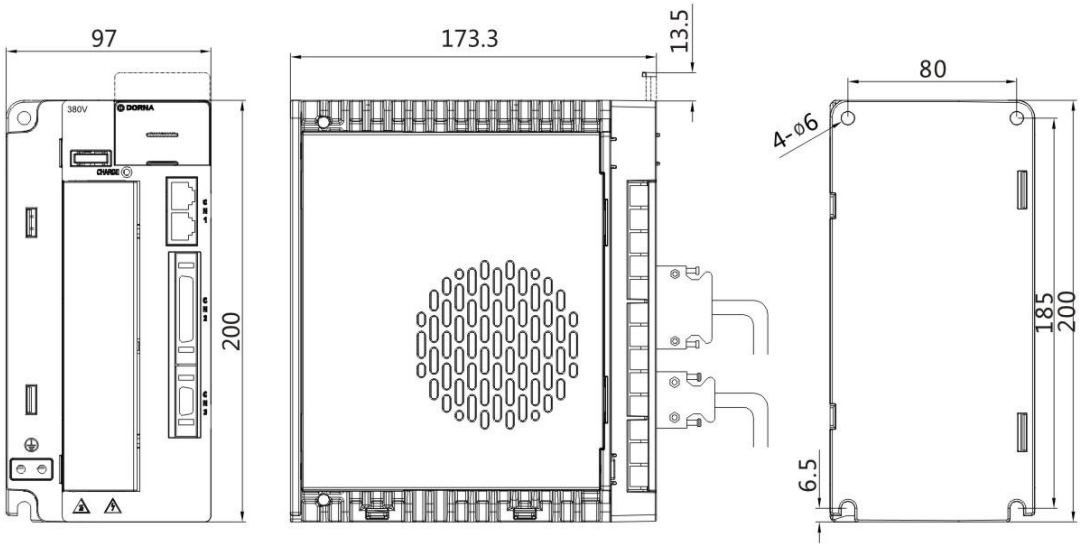

SERVO DRIVE DIMENSIONS /

D Type case: 220V class 4.5KW~5.5KW, 380V class 5.5KW ~ 7.5KW

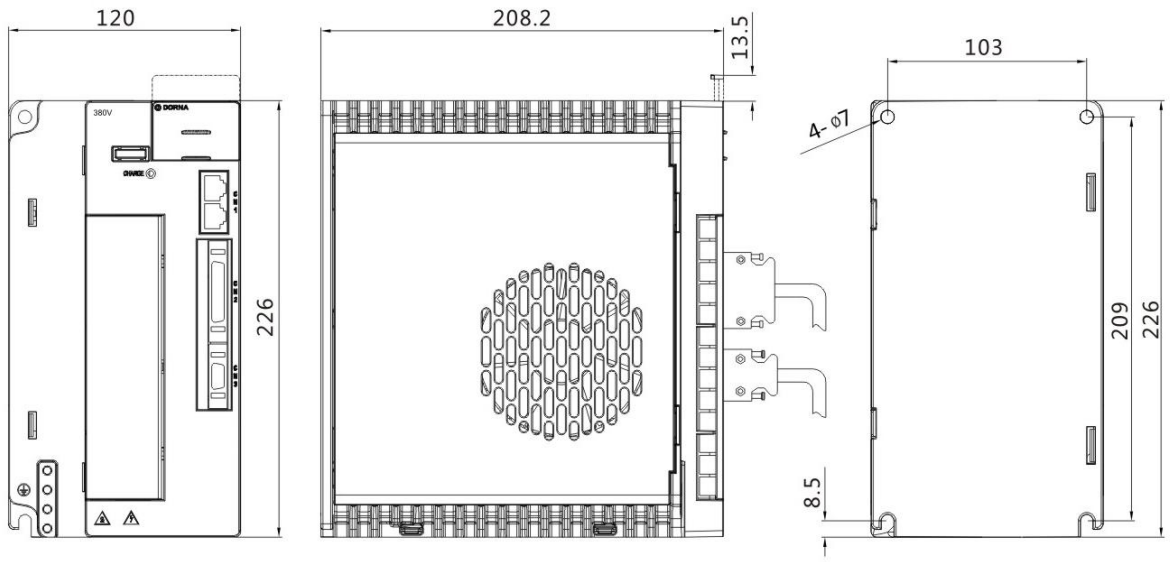

E Type case: 380V class 11KW~22KW

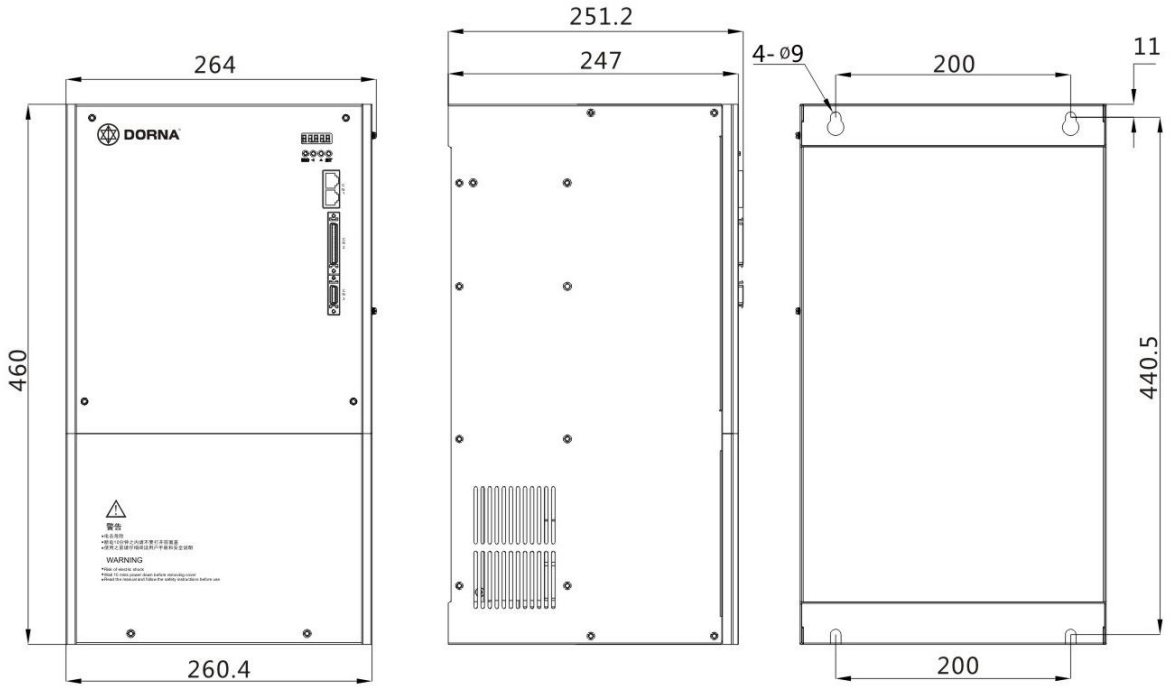

SERVO MOTOR SPECIFICATIONS & DIMENSIONS

Motor Parameters

40 Servo Motor Series

Servo Motor series	40 series	
Servo Motor model	40DNMA2-0D05D	40DNMA2-0D10D
Input voltage	220VAC	220VAC
Inertia	Medium	
Rated power (W)	50	100
Rated torque (N*m)	0.16	0.32
Rated current (A)	1.1	0.96
Maximum current (A)	5000	5000
Rated speed (rpm)	3.3	2.7
Maximum speed (rpm)	3000	3000
Torque constant (N*m/Amp)	0.14	0.35
Back EMF constant (V/Krpm)	9.5	22.5
Rotary inertia (with brake) (10^{-4}Kg*m^2)	0.023 (0.020)	0.048 (0.05)
Resistance (line-line) (Ω)	11.4	15
Inductance (line-line) (mH)	10.1	15.8
Mass (with brake) (kg)	0.4 (0.5)	0.6 (0.8)
LL (with brake) (mm)	80.3(117)	105.3(137)
LR (mm)	28	28
LE (mm)	3	3
LG (mm)	7	7
S (mm)	8	8
LJ1 (mm)	0	0
LJ (mm)	6.2	6.2
J (mm)	16	16
LF1 (mm)	3	3
LF2 (mm)	3	3
LM (mm)	M3 deep 8	M3 deep 8
LA (mm)	46	46
LB (mm)	30	30
LC (mm)	40	40
LZ (mm)	4.3	4.3

Motor outline

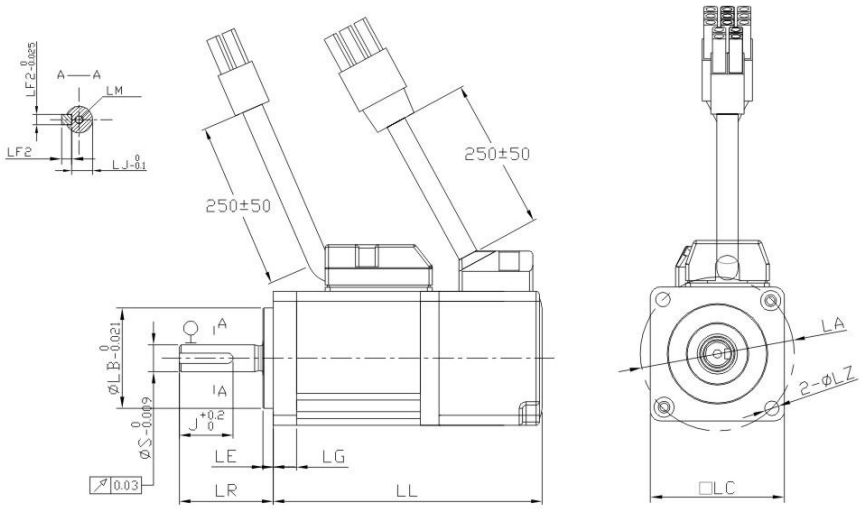

SERVO MOTOR SPECIFICATIONS & DIMENSIONS

Motor Parameters

60 Servo Motor Series

Servo Motor series	60 series			
Servo Motor model	60DNMA1-0D20	60DNMA2-0D20	60DNMA1-0D40	60DNMA2-0D40
Input voltage	220VAC	220VAC	220VAC	220VAC
Inertia	Medium	High	Medium	High
Rated power (W)	200	200	400	400
Rated torque (N*m)	0.64	0.64	1.27	1.27
Rated current (A)	1.7	1.4	2.9	2.5
Maximum current (A)	5.1	4.2	9	7.5
Rated speed (rpm)	3000	3000	3000	3000
Maximum speed (rpm)	5000	5000	5000	5000
Torque constant (N*m/Amp)	0.37	0.45	0.43	0.508
Back EMF constant (V/Krpm)	24	29	28.7	33
Rotary inertia (with brake) (10^{-4}Kg*m^2)	0.14 (0.16)	0.14 (0.16)	0.24 (0.25)	0.67 (0.68)
Resistance (line-line) (Ω)	6	8.4	3.8	4.28
Inductance (line-line) (mH)	16	26.5	11	15.4
Mass (with brake) (kg)	1.03 (1.53)	1.03 (1.53)	1.43 (1.89)	1.59 (2.05)
LL (with brake) (mm)	105(140)	105(140)	125(160)	140(175)
LR (mm)	30	30	30	30
LE (mm)	3	3	3	3
LG (mm)	8	8	8	8
S (mm)	14	14	14	14
LJ1 (mm)	0	0	0	0
LJ (mm)	11	11	11	11
J (mm)	20	20	20	20
LF1 (mm)	5	5	5	5
LF2 (mm)	5	5	5	5
LM (mm)	M4 deep 15	M4 deep 15	M4 deep 15	M4 deep 15
LA (mm)	70	70	70	70
LB (mm)	50	50	50	50
LC (mm)	60	60	60	60
LZ (mm)	5.5	5.5	5.5	5.5

Motor outline

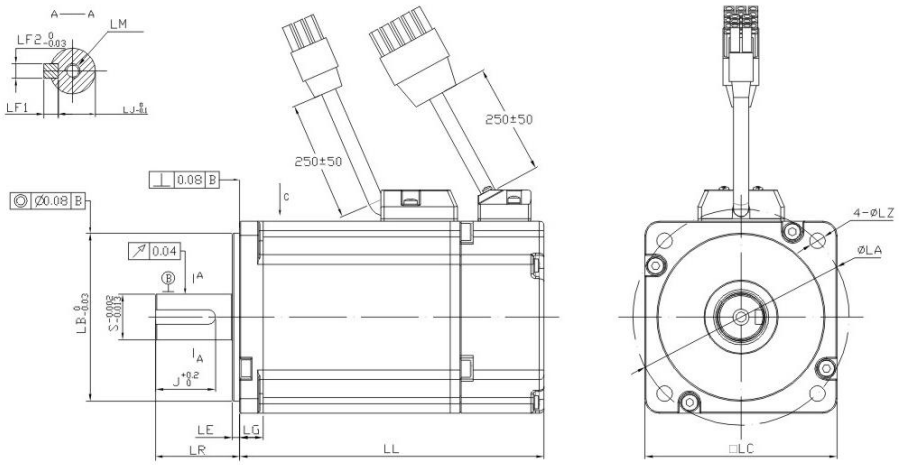

SERVO MOTOR SPECIFICATIONS & DIMENSIONS

Motor Parameters — 80 Servo Motor Series

Servo Motor series	80 Series			
Servo Motor model	80DNMA1-0D75	80DNMA2-0D75	80DNMA1-0001	80DNMA2-0001
Input voltage	220VAC	220VAC	220VAC	220VAC
Inertia	Medium	High	Medium	
Rated power (W)	750	750	1000	1000
Rated torque (N*m)	2.39	2.39	3.18	3.18
Rated current (A)	4.1	3.7	5.5	5.1
Maximum current (A)	12.5	11.1	15.1	15.3
Rated speed (rpm)	3000	3000	3000	3000
Maximum speed (rpm)	5000	5000	5000	5000
Torque constant (N*m/Amp)	0.58	0.64	0.43	0.62
Back EMF constant (V/Krpm)	40	43	40	41
Rotary inertia (with brake) (10^{-4}Kg*m^2)	0.88 (0.92)	1.5 (1.53)	1.12 (1.15)	1.12 (1.15)
Resistance (line-line) (Ω)	1.5	1.5	1.21	1.2
Inductance (line-line) (mH)	7.9	7.9	6.2	6.1
Mass (with brake) (kg)	2.66 (3.76)	2.93 (4.03)	3.12 (4.22)	3.12 (4.12)
LL (with brake) (mm)	129.7(168.9)	144.7(183.9)	144.7(183.9)	144.7(183.9)
LR (mm)	35	35	35	35
LE (mm)	3	3	3	3
LG (mm)	8	8	8	8
S (mm)	19	19	19	19
LJ1 (mm)	0	0	0	0
LJ (mm)	15.5	15.5	15.5	15.5
J (mm)	25	25	25	25
LF1 (mm)	6	6	6	6
LF2 (mm)	6	6	6	6
LM (mm)	M5 deep 20	M5 deep 20	M5 deep 20	M5 deep 20
LA (mm)	90	90	90	90
LB (mm)	70	70	70	70
LC (mm)	80	80	80	80
LZ (mm)	6.5	6.5	6.5	6.5

Motor outline

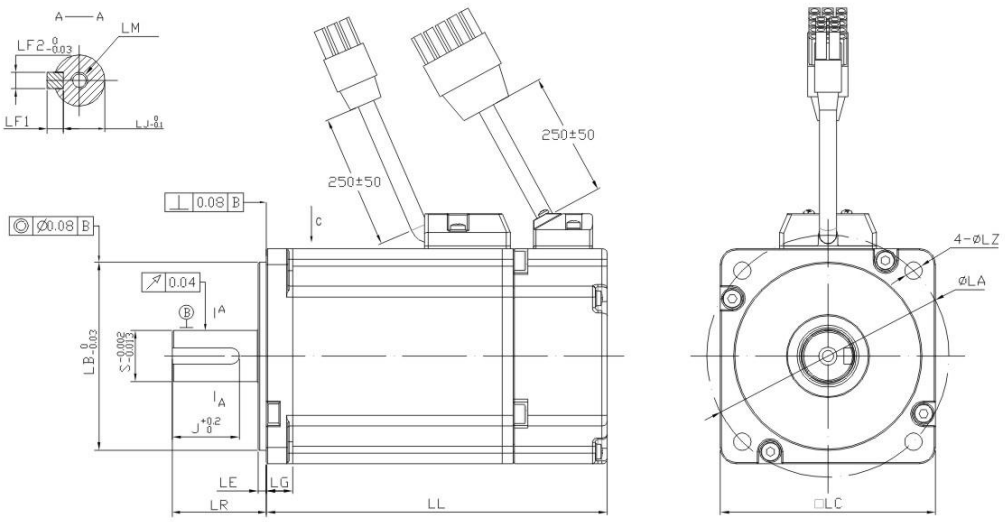

SERVO MOTOR SPECIFICATIONS & DIMENSIONS

Motor Parameters

110 Servo Motor Series

Servo Motor series	110 Series	
Servo Motor model - new	110DNMA1-0D80C	110DNMA1-01D2C
Servo Motor model - old	110DNA-08C	110DNA-12C
Input voltage	220VAC	
Rated power (KW)	0.8	1.2
Rated torque (N*m)	3.58	5.73
Maximum torque (N*m)	10.74	17.19
Rated current (A)	4	5.6
Maximum current (A)	12	16.8
Rated speed (rpm)	2000	2000
Maximum speed (rpm)	2500	2500
Torque constant (N*m/Amp)	0.90	1.02
Back EMF constant(V/Krpm)	80	78
Rotary inertia (with brake) (10^{-4}Kg*m^2)	6.6 (6.7)	8.8 (8.9)
Resistance (line-line) (Ω)	2.14	1.5
Inductance (line-line) (mH)	7.45	5.3
Mass (with brake) (kg)	5 (6.3)	6.5 (7.8)
LL (with brake) (mm)	184(236)	204(256)
LR (mm)	40	40
LE (mm)	5	5
LG (mm)	14	14
S (mm)	19	19
LJ1 (mm)	3	3
LJ (mm)	21.5	21.5
J (mm)	25	25
LF1 (mm)	6	6
LF2 (mm)	6	6
LM (mm)	M5 deep 15	M5 deep 15
LA (mm)	130	130
LB (mm)	95	95
LC (mm)	110	110
LZ (mm)	9	9

Motor outline

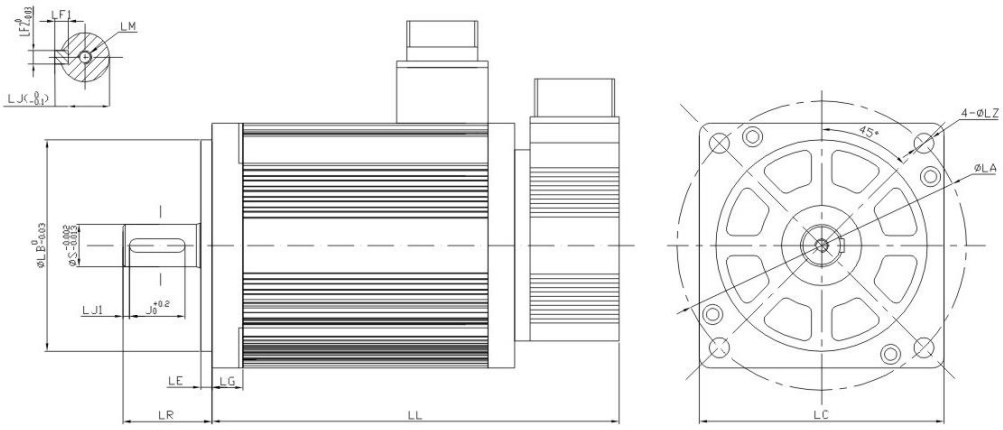

SERVO MOTOR SPECIFICATIONS & DIMENSIONS

Motor Parameters — 130 Servo Motor Series

Servo Motor series	130 Series				
Servo Motor model	130DNMA1-0001C	130DNMA1-01D2C	130DNMA1-01D5C	130DNMA1-02D2C	130DNMA1-0003C
Input voltage	220VAC				
Rated power (KW)	1	1.2	1.5	2.2	3
Rated torque (N*m)	4.77	5.73	7.16	10.5	14.33
Maximum torque (N*m)	14.31	17.2	21.48	31.5	42.99
Rated current (A)	4.9	6.3	8	10.5	16.9
Maximum current (A)	14.7	18.9	24	31.5	50.7
Rated speed (rpm)	2000	2000	2000	2000	2000
Maximum speed (rpm)	3000	3000	3000	3000	3000
Torque constant (N*m/Amp)	0.97	0.91	0.9	1	0.848
Back EMF constant(V/Krpm)	64	64	64	66	64
Rotary inertia (with brake)(10^{-4}Kg*m^2)	8.3 (8.6)	10.4 (10.7)	12.2 (12.5)	15.6 (15.9)	22.9 (23.2)
Resistance (line-line) (Ω)	1.3	0.9	0.65	0.5	0.27
Inductance (line-line) (mH)	8	6.1	4.7	3.9	2.2
Mass (with brake) (kg)	7.2 (10)	8.2 (11)	9.2 (12)	11 (13.8)	15 (17.8)
LL (with brake) (mm)	172(231)	181 240)	197(256)	219(278)	267(326)
LR (mm)	57	57	57	57	57
LE (mm)	5	5	5	5	5
LG (mm)	13	13	13	13	13
S (mm)	22	22	22	22	22
LJ1 (mm)	0	0	0	0	0
LJ (mm)	24.5	24.5	24.5	24.5	24.5
J (mm)	36	36	36	36	36
LF1 (mm)	6	6	6	6	6
LF2 (mm)	6	6	6	6	6
LM (mm)	M6 deep 15	M6 deep 15	M6 deep 15	M6 deep 15	M6 deep 15
LA (mm)	145	145	145	145	145
LB (mm)	110	110	110	110	110
LC (mm)	130	130	130	130	130
LZ (mm)	9	9	9	9	9

Motor outline

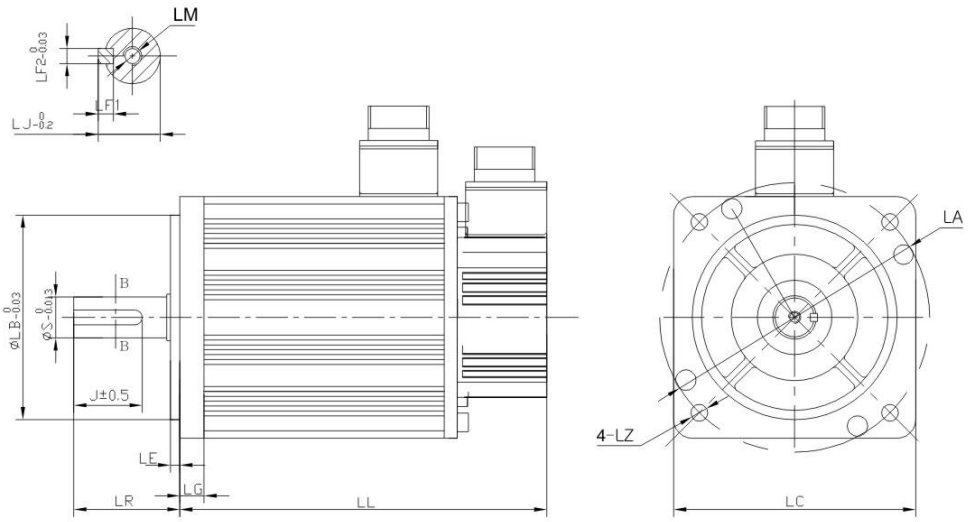

SERVO MOTOR SPECIFICATIONS & DIMENSIONS

Motor Parameters 130 Servo Motor Series

Servo Motor series	130 Series			
Servo Motor model	130DNMB1-0001C	130DNMB1-01D5C	130DNMB1-02D2C	130DNMB1-0003C
Input voltage	380VAC			
Rated power (KW)	1	1.5	2.2	3
Rated torque (N*m)	4.77	7.16	10.5	14.33
Maximum torque (N*m)	14.31	21.48	31.5	42.99
Rated current (A)	3.2	4.5	6.2	8.7
Maximum current (A)	9.6	13.5	18.6	26.1
Rated speed (rpm)	2000	2000	2000	2000
Maximum speed (rpm)	3000	3000	3000	3000
Torque constant (N*m/Amp)	1.49	1.59	1.69	1.64
Back EMF constant(V/Krpm)	113	120	120	117
Rotary inertia (with brake) (10^{-4}Kg*m^2)	8.3 (8.6)	10.4 (10.7)	15.6 (15.9)	22.9 (23.2)
Resistance (line-line) (Ω)	3.9	2.02	1.45	0.78
Inductance (line-line) (mH)	25	14	11	7
Mass (with brake) (kg)	7.5 (10.3)	9.6 (12.4)	11.5 (13.3)	16 (18.8)
LL (with brake) (mm)	172(231)	197(256)	219(278)	267(326)
LR (mm)	57	57	57	57
LE (mm)	5	5	5	5
LG (mm)	13	13	13	13
S (mm)	22	22	22	22
LJ1 (mm)	0	0	0	0
LJ (mm)	24.5	24.5	24.5	24.5
J (mm)	36	36	36	36
LF1 (mm)	6	6	6	6
LF2 (mm)	6	6	6	6
LM (mm)	M6 deep 15	M6 deep 15	M6 deep 15	M6 deep 15
LA (mm)	145	145	145	145
LB (mm)	110	110	110	110
LC (mm)	130	130	130	130
LZ (mm)	9	9	9	9

Motor outline

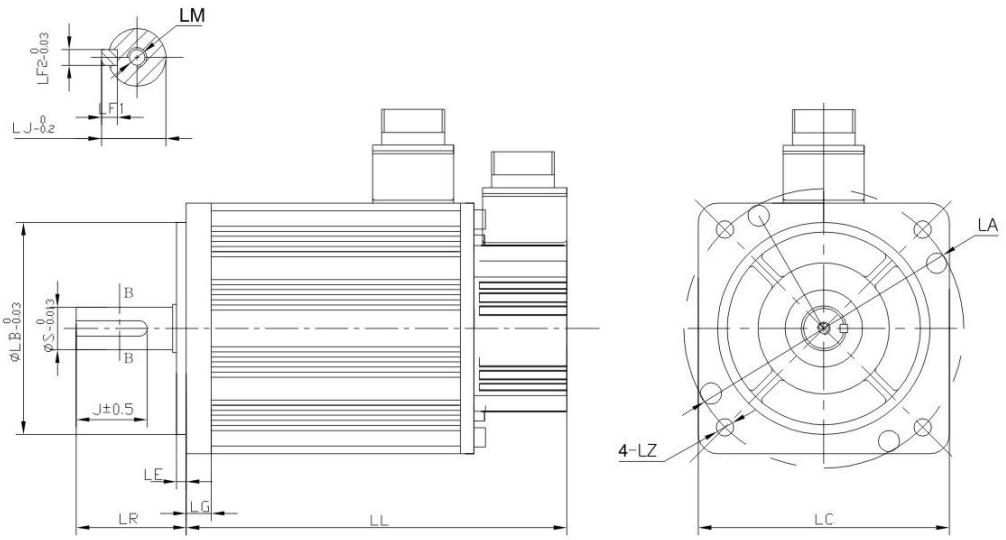

SERVO MOTOR SPECIFICATIONS & DIMENSIONS

Motor Parameters 130 Servo Motor Series

Servo Motor series	130 Series					
Servo Motor model	13DNMA2-0D85D	130DNMA2-0001C	130DNMA2-01D3B	130DNMA2-01D5C	130DNMA2-0002C	130DNMA2-0003C
Input voltage	220VAC	220VAC	220VAC	220VAC	220VAC	220VAC
Inertia	Medium					
Rated power (W)	850	1000	1300	1500	2000	3000
Rated torque (N*m)	5.4	4.77	8.27	7.16	9.55	14.33
Rated current (A)	5.7	5	9.32	8.4	10.3	13.5
Maximum current (A)	17.1	15	28	25.2	30.1	40.5
Rated speed (rpm)	1500	2000	1500	2000	2000	2000
Maximum speed (rpm)	3000	3000	3000	3000	3000	3000
Torque constant (N*m/Amp)	0.95N.m/Arms	0.95N.m/Arms	0.89N.m/Arms	0.85N.m/Arms	0.93N.m/Arms	1.07N.m/Arms
Back EMF constant(V/Krpm)	67.5V/Krpm	66V/Krpm	61.7V/Krpm	59.8V/Krpm	72.6V/Krpm	76V/Krpm
Rotary inertia (with brake)(10^{-4}Kg*m^2)	8.08 (8.5)	7.1 (7.5)	12.1 (12.5)	10.6 (11.1)	13.8 (14.3)	20.4 (20.9)
Resistance (line-line) (Ω)	0.93	1.08	0.45	0.543	0.52	0.32
Inductance (line-line) (mH)	11.4	12.8	5.7	6.3	6.8	4.7
Mass (with brake) (kg)	7.2 (9.5)	6.5 (8.8)	7.6 (9.9)	8 (10.5)	9.6 (11.9)	12.6 (14.9)
LL (with brake) (mm)	160 (204)	154 (198)	182 (226)	173 (217)	192 (236)	230 (274)
LR (mm)	58	58	58	58	58	58
LE (mm)	6	6	6	6	6	6
LG (mm)	12	12	12	12	12	12
S (mm)	22	22	22	22	22	22
LJ1 (mm)	0	0	0	0	0	0
LJ (mm)	18	18	18	18	18	18
J (mm)	36	36	36	36	36	36
LF1 (mm)	7	7	7	7	7	7
LF2 (mm)	8	8	8	8	8	8
LM (mm)	M6 deep 15	M6 deep 15	M6 deep 15	M6 deep 15	M6 deep 15	M6 deep 15
LA (mm)	145	145	145	145	145	145
LB (mm)	110	110	110	110	110	110
LC (mm)	130	130	130	130	130	130
LZ (mm)	9.5	9.5	9.5	9.5	9.5	9.5

Motor outline

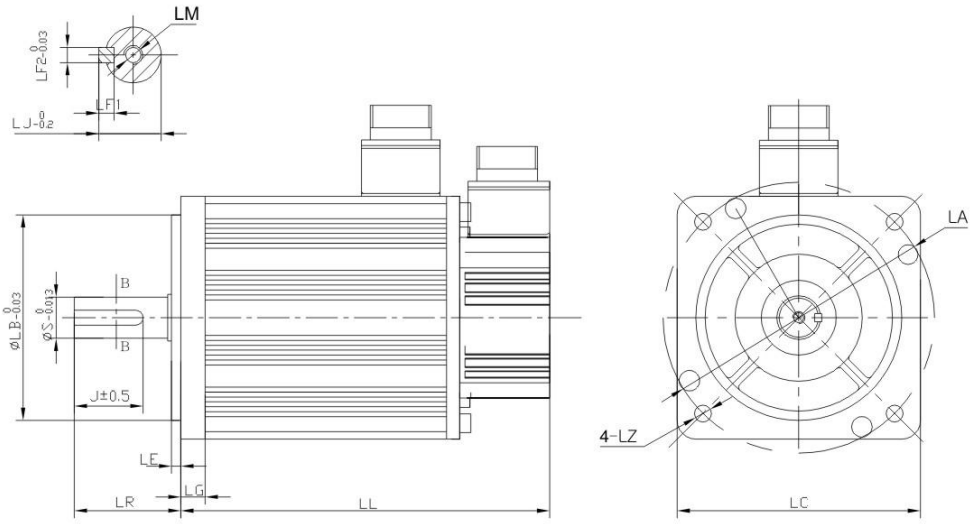

SERVO MOTOR SPECIFICATIONS & DIMENSIONS

Motor Parameters

180 Servo Motor Series

Servo Motor series	180 Series					
Servo Motor model - new	180DNMA1-0003B	180DNMA1-04D5B	180DNMB1-0003B	180DNMB1-04D5B	180DNMB1-05D5B	180DNMB1-07D5B
Servo Motor model - old	180DNA-30B	180DNA-45B	DNBB18-0003B	DNBB18-04D5B	DNBB18-05D5B	DNBB18-07D5B
Input voltage	220VAC		380VAC			
Rated power (KW)	3	4.5	3	4.5	5.5	7.5
Rated torque (N*m)	19.1	28.6	19.1	28.6	35	47.7
Maximum torque (N*m)	57.3	85.8	57.3	85.8	105	143.1
Rated current (A)	12	18.4	6.8	10.3	12.5	17.5
Maximum current (A)	36	55.2	20.4	30.9	37.5	52.5
Rated speed (rpm)	1500	1500	1500	1500	1500	1500
Maximum speed (rpm)	2000	2000	2000	2000	2000	2000
Torque constant (N*m/Amp)	1.59	1.55	2.81	2.78	2.80	2.73
Back EMF constant(V/Krpm)	107	112	225	210	200	142
Rotary inertia (with brake)(10^{-4}Kg*m^2)	47.7 (48.2)	69 (69.5)	47.7 (48.2)	69 (69.5)	77.5 (78)	121 (121.5)
Resistance (line-line) (Ω)	0.67	0.32	2.9	1.18	0.88	0.24
Inductance (line-line) (mH)	4.65	3.3	21	10	9.4	2.45
Mass (with brake) (kg)	19.5 (24.5)	23.5 (28.5)	20 (25)	24 (29)	31.5 (36.5)	37 (42)
LL (with brake) (mm)	212(287)	252(327)	212(287)	252(327)	272(347)	332(407)
LR (mm)	65	65	65	65	65	65
LE (mm)	3.2	3.2	3.2	3.2	3.2	3.2
LG (mm)	18	18	18	18	18	18
S (mm)	35	35	35	35	35	35
LJ1 (mm)	3	3	3	3	3	3
LJ (mm)	38	38	38	38	38	38
J (mm)	51	51	51	51	51	51
LF1 (mm)	8	8	8	8	8	8
LF2 (mm)	10	10	10	10	10	10
LM (mm)	M8 deep 20	M8 deep 20	M8 deep 20	M8 deep 20	M8 deep 20	M8 deep 20
LA (mm)	200	200	200	200	200	200
LB (mm)	114.3	114.3	114.3	114.3	114.3	114.3
LC (mm)	180	180	180	180	180	180
LZ (mm)	13	13	13	13	13	13

Motor outline

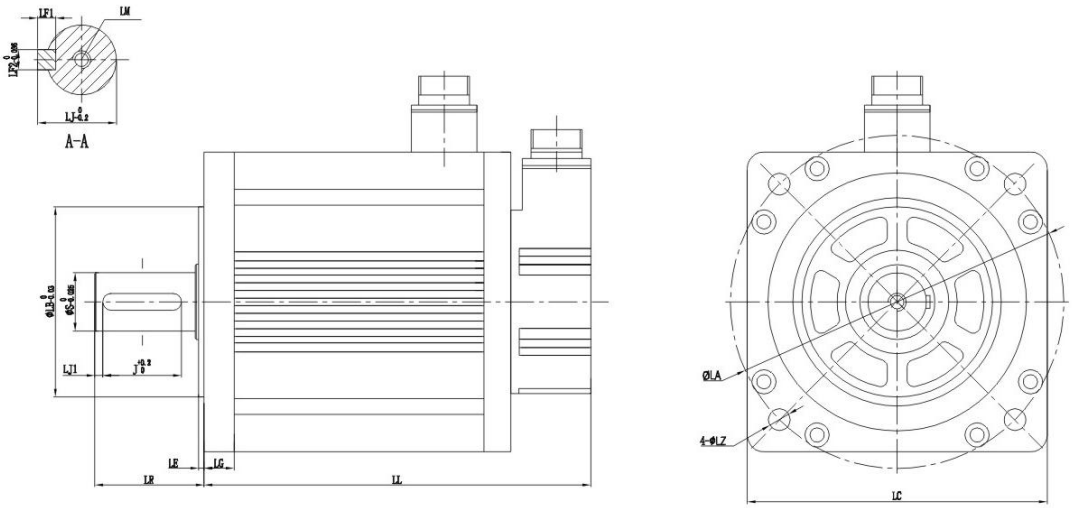

SERVO MOTOR SPECIFICATIONS & DIMENSIONS

Motor Parameters — 200 Servo Motor Series

Servo Motor series	200 Series				
Servo Motor model	200DNMB1-07D3C	200DNMB1-0011D	200DNMB1-07D3A	200DNMB1-14D7C	200DNMB1-0022D
Input voltage	380VAC				
Rated power (KW)	7.3	11.0	7.3	14.7	22.0
Rated torque (N*m)	35	35	70	70	70
Maximum torque (N*m)	105	105	210	210	210
Rated current (A)	13	20	15	25	37
Maximum current (A)	39.8	61.2	45.9	76.5	113.2
Rated speed (rpm)	2000	3000	1000	2000	3000
Maximum speed (rpm)	2400	3200	1200	2400	3200
Torque constant (N*m/Amp)	2.69	1.75	4.67	2.80	1.89
Back EMF constant(V/Krpm)	1.5	1.08	3.2	1.5	1.08
Rotary inertia (with brake) (10^{-4}Kg*m^2)	5.5	5.5	10	10	10
Resistance (line-line) (Ω)	1.2	0.5	1.9	0.48	0.21
Inductance (line-line) (mH)	13	6.1	27	6.08	3.06
Mass (with brake) (kg)	35	37	45	47	49
LL (with brake) (mm)	363	363	433	433	433
LR (mm)	82	82	82	82	82
LE (mm)	4	4	4	4	4
LG (mm)	16.5	16.5	16.5	16.5	16.5
S (mm)	42	42	42	42	42
LJ1 (mm)	0	0	0	0	0
LJ (mm)	37	37	37	37	37
J (mm)	66	66	66	66	66
LF1 (mm)	8	8	8	8	8
LF2 (mm)	12	12	12	12	12
LM (mm)	M12 deep 30	M12 deep 30	M12 deep 30	M12 deep 30	M12 deep 30
LA (mm)	215	215	215	215	215
LB (mm)	180	180	180	180	180
LC (mm)	200	200	200	200	200
LZ (mm)	13.5	13.5	13.5	13.5	13.5

Motor outline

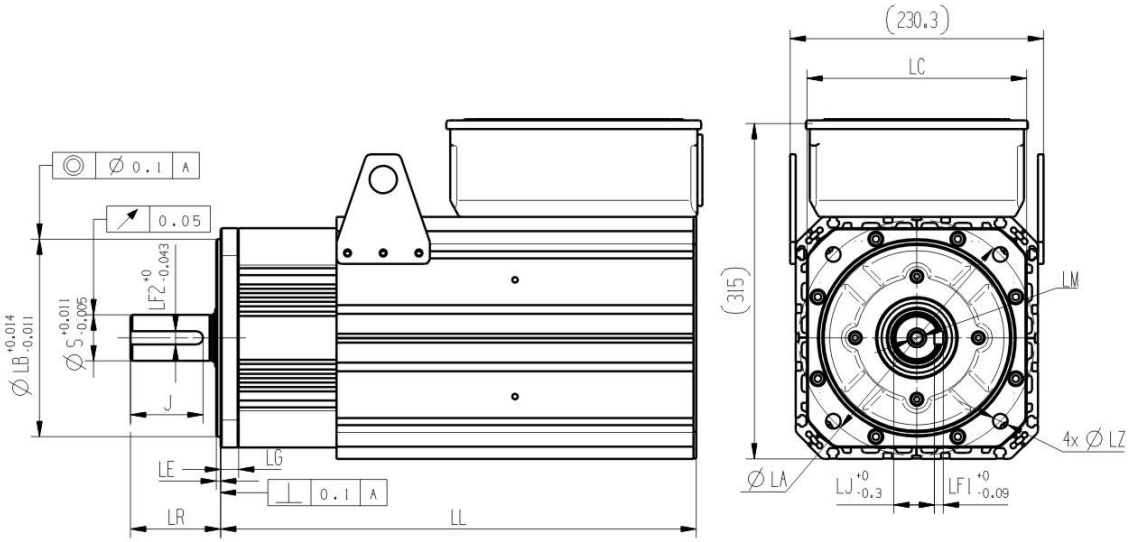

SERVO MOTOR SPECIFICATIONS & DIMENSIONS

Motor Parameters

200 Servo Motor Series

Servo Motor series	200 Series					
Servo Motor model	200DNMB1-0011A	200DNMB1-0022C	200DNMB1-0033D	200DNMB1-14D7A	200DNMB1-29D3C	200DNMB1-0044D
Input voltage	380VAC					
Rated power (KW)	11.0	22.0	33.0	14.7	29.0	44.0
Rated torque (N*m)	105	105	105	140	140	140
Maximum torque (N*m)	315	315	315	420	420	420
Rated current (A)	20	37	55	25	55	85
Maximum current (A)	61.2	113.2	168.3	76.5	168.3	260.1
Rated speed (rpm)	1000	2000	3000	1000	2000	3000
Maximum speed (rpm)	1200	2400	3200	1200	2400	3200
Torque constant (N*m/Amp)	5.25	2.84	1.91	5.60	2.55	1.65
Back EMF constant(V/Krpm)	3.2	1.5	1.08	3.2	1.5	1.08
Rotary inertia (with brake) (10^{-4}Kg*m^2)	14	14	14	17.5	17.5	17.5
Resistance (line-line) (Ω)	1.13	0.3	0.14	0.78	0.18	0.086
Inductance (line-line) (mH)	18.4	4.5	2.08	13.1	2.7	1.58
Mass (with brake) (kg)	58	60	62	70	72	74
LL (with brake) (mm)	503	503	503	573	573	573
LR (mm)	82	82	82	82	82	82
LE (mm)	4	4	4	4	4	4
LG (mm)	16.5	16.5	16.5	16.5	16.5	16.5
S (mm)	42	42	42	42	42	42
LJ1 (mm)	0	0	0	0	0	0
LJ (mm)	37	37	37	37	37	37
J (mm)	66	66	66	66	66	66
LF1 (mm)	8	8	8	8	8	8
LF2 (mm)	12	12	12	12	12	12
LM (mm)	M12 deep 30	M12 deep 30	M12 deep 30	M12 deep 30	M12 deep 30	M12 deep 30
LA (mm)	215	215	215	215	215	215
LB (mm)	180	180	180	180	180	180
LC (mm)	200	200	200	200	200	200
LZ (mm)	13.5	13.5	13.5	13.5	13.5	13.5

Motor outline

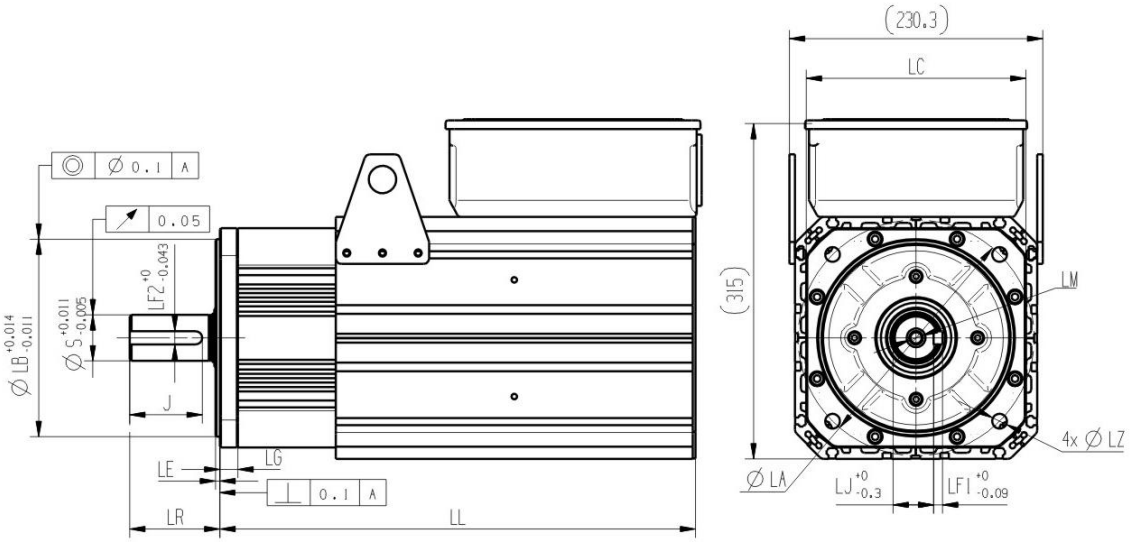

DORNA TECHNOLOGY CO.,LTD

DORNA Technology Co., Ltd

No.99,Zhuangchi Middle Road,Ganyao Industrial Park,Jiashan,Zhejiang,China

0573-89100555

en.dorna.com.cn